9

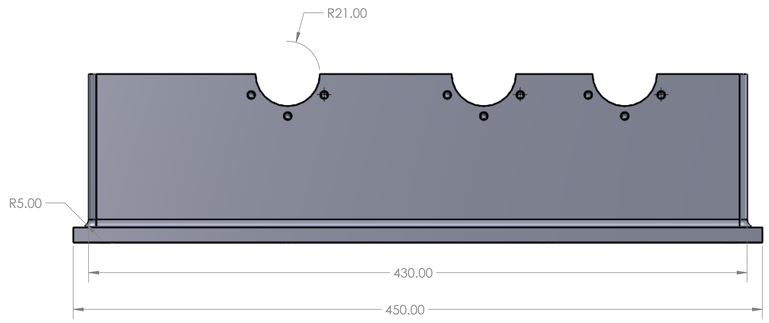

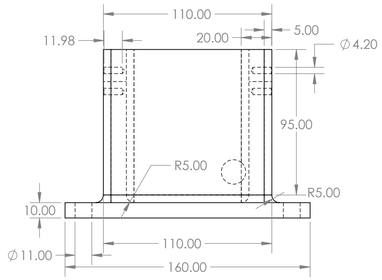

10

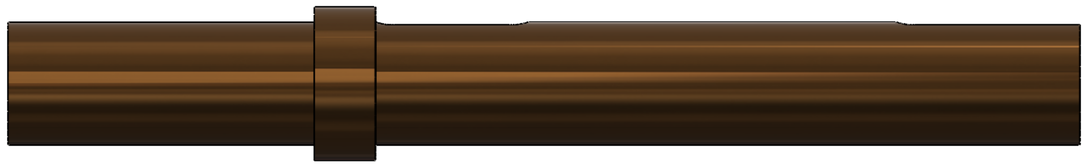

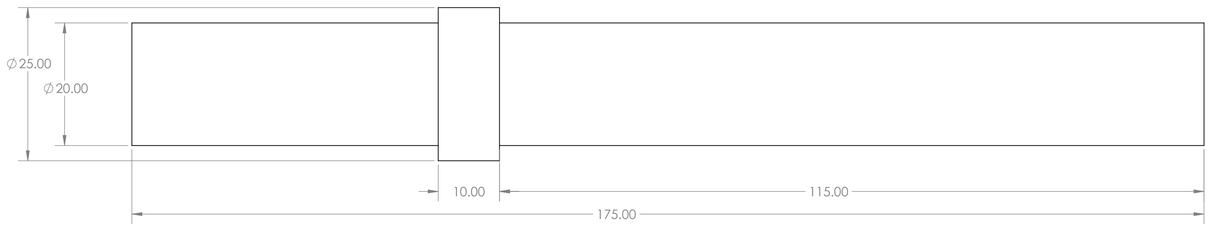

11

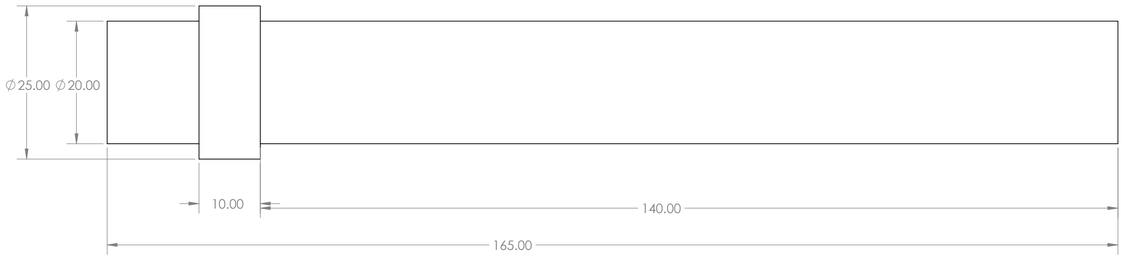

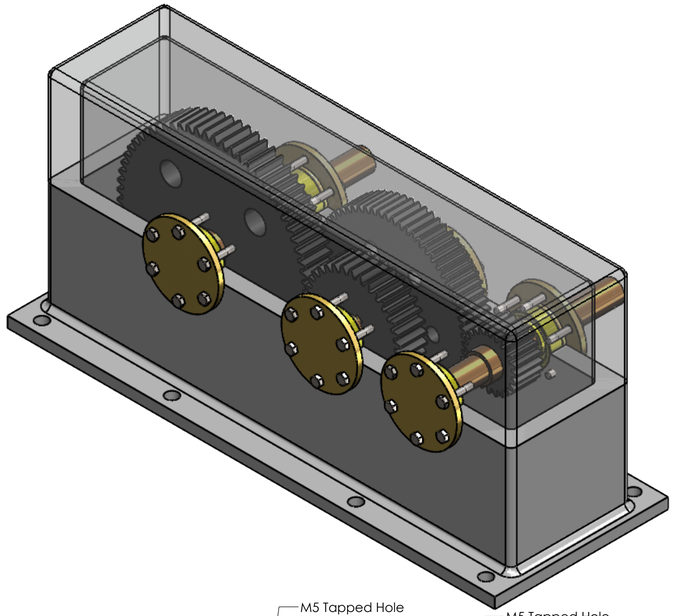

12

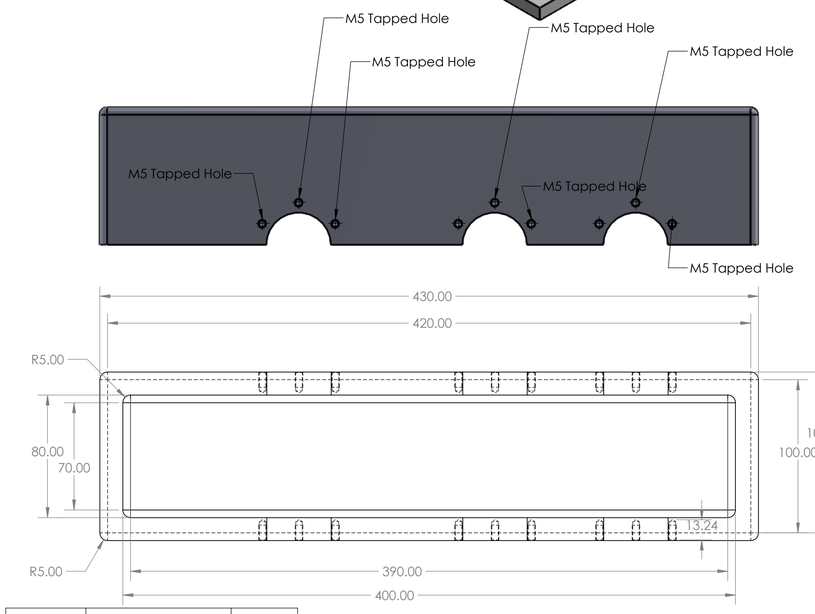

ITEM NO.	PART NUMBER	QTY.
1	housing	1
2	23T GEAR	1
3	69T GEAR	1
4	34T 2.5M GEAR	1
5	69T 2.5M GEAR	1
6	input shaft	1
7	1st stage shaft	1
8	output shaft	1
9	6004 bearing	6
10	top housing	1
11	bearing cover 01	4
12	bearing cover 02	2
13	ISO 4016 - M5 x 25 x 16-WN	36

NAME OF STUDENT	ROLL NO
subodh bhosale	19
vaibhav londhe	20
yuvraj waghamode	22
rutik pakhale	25
sagar lodade	26
girish patil	27
utkarsh jadhav	28
pranav more	29

TE mech
scale for 1:2
assebly

gear box part 1