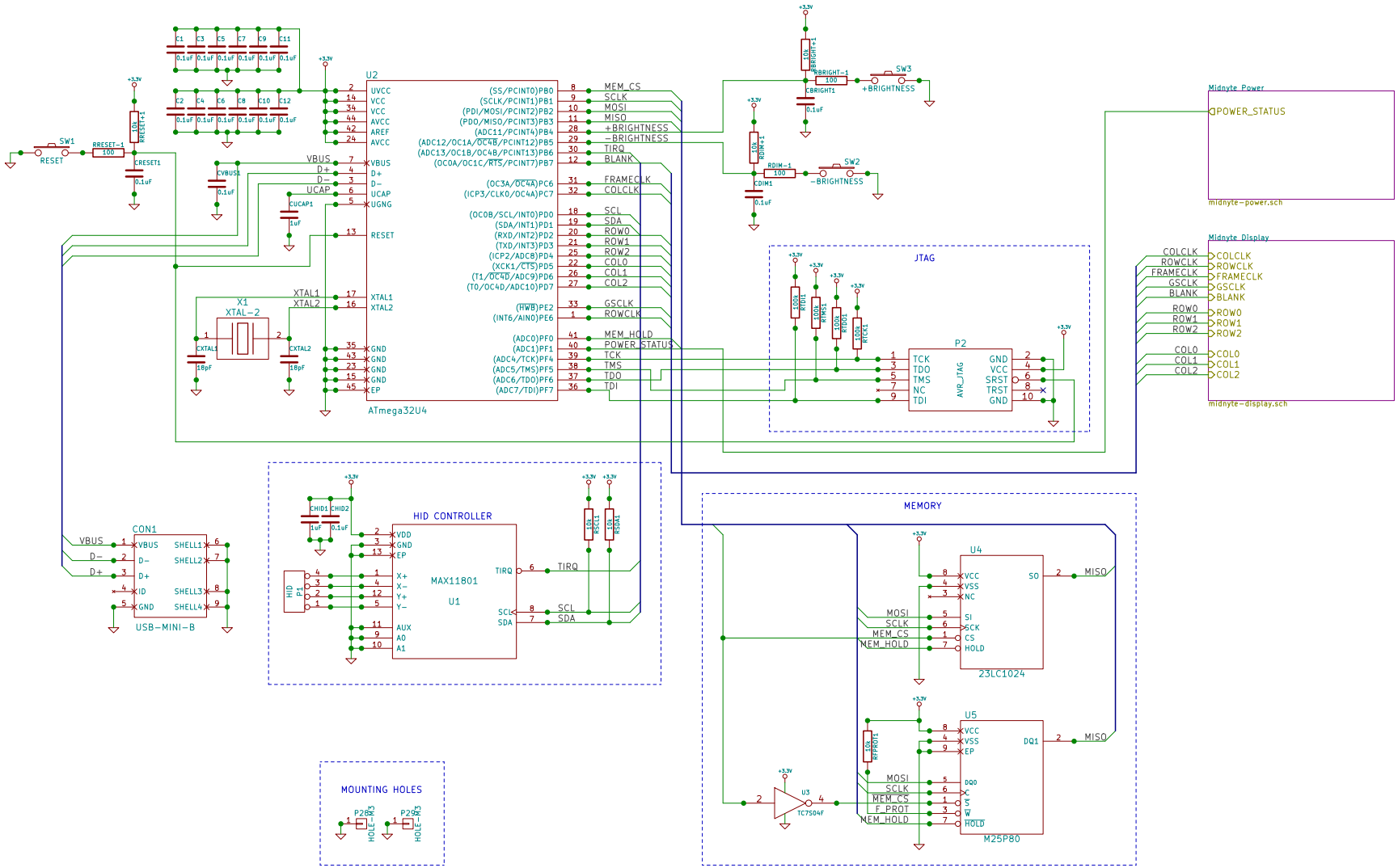

Sheet: /
File: midnyte.sch

Title: Midnyte

Size: A3	Date: 19 oct 2014	Rev: A
KiCad E.D.A. eeschema (2014-10-18 BZR 5203)-product		Id: 1/6

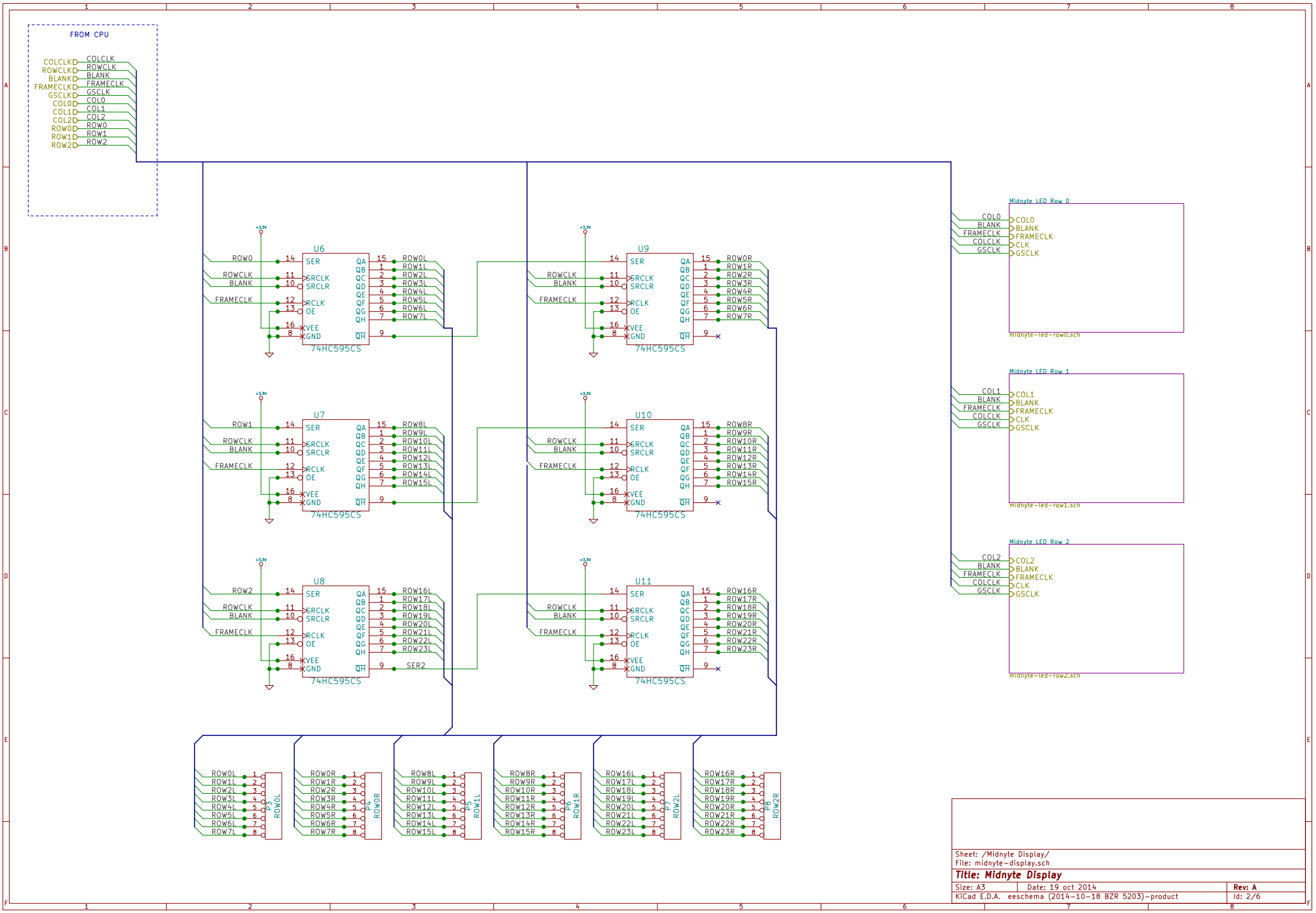

Sheet: /Midnyte Display/
File: midnyte-display.sch

Title: Midnyte Display

Size: A3	Date: 19 oct 2014	Rev: A
KiCad E.D.A. eeschema (2014-10-18 BZR 5203)-product		Id: 2/6

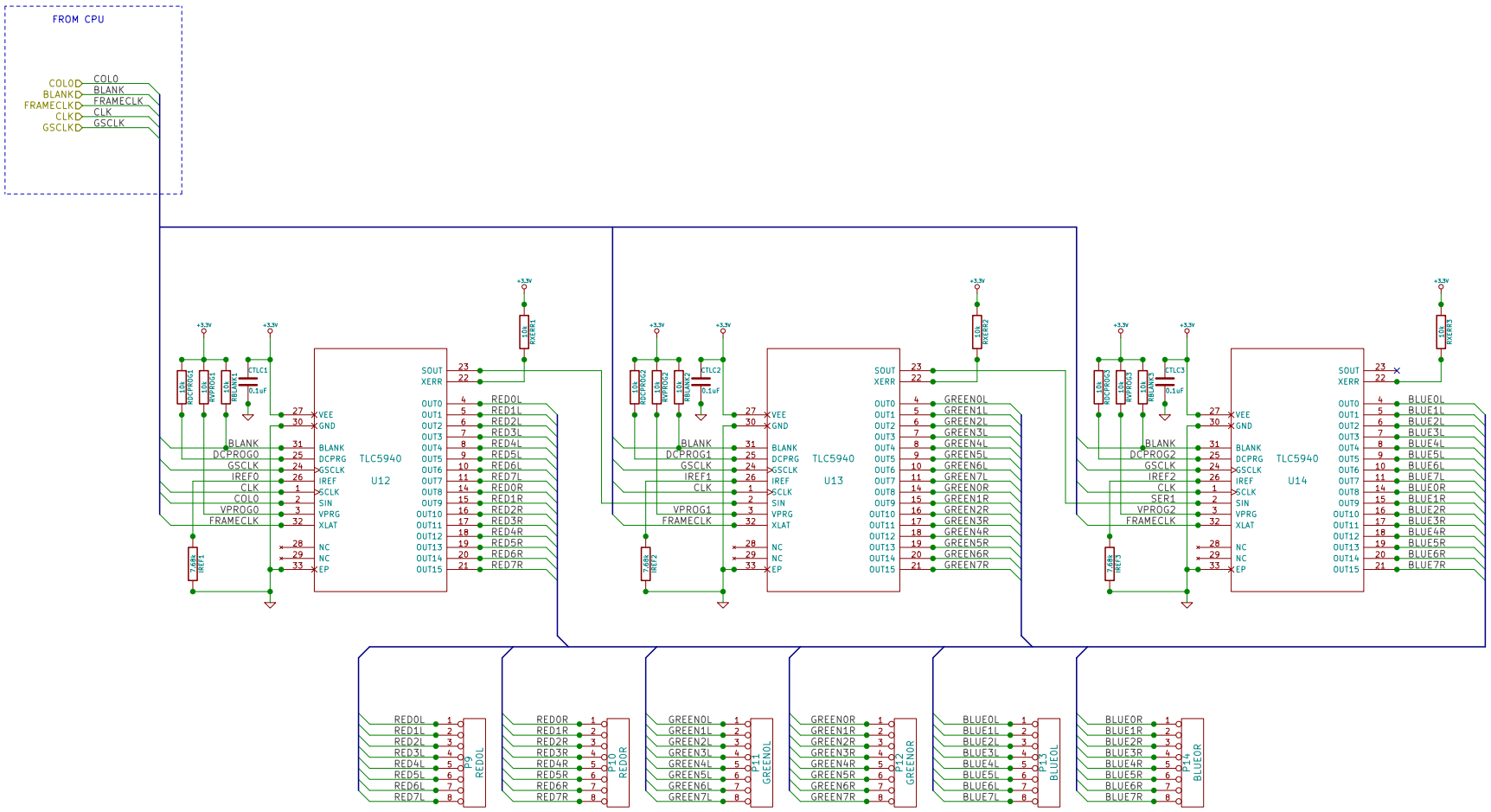

Sheet: /Midnyte Display/Midnyte LED Row 0/
File: midnyte-led-row0.sch

Title: Midnyte LED Array Row 0

Size: A3	Date: 19 oct 2014	Rev: A
KiCad E.D.A. eeschema (2014-10-18 BZR 5203)-product		Id: 3/6

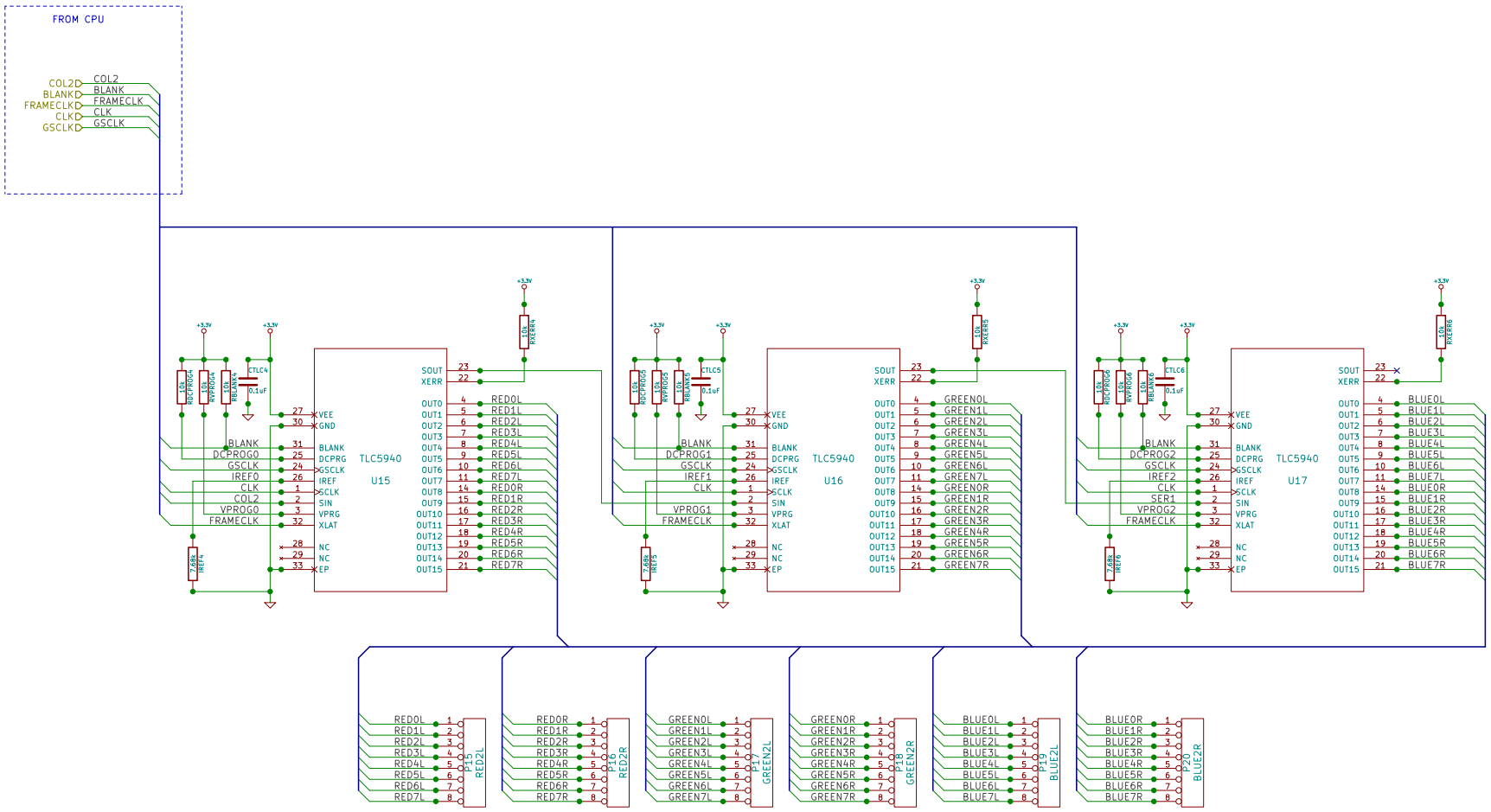

Sheet: /Midnyte Display/Midnyte LED Row 2/
File: midnyte-led-row2.sch

Title: Midnyte LED Array Row 2

Size: A3	Date: 19 oct 2014	Rev: A
KiCad E.D.A. eeschema (2014-10-18 BZR 5203)-product		Id: 4/6

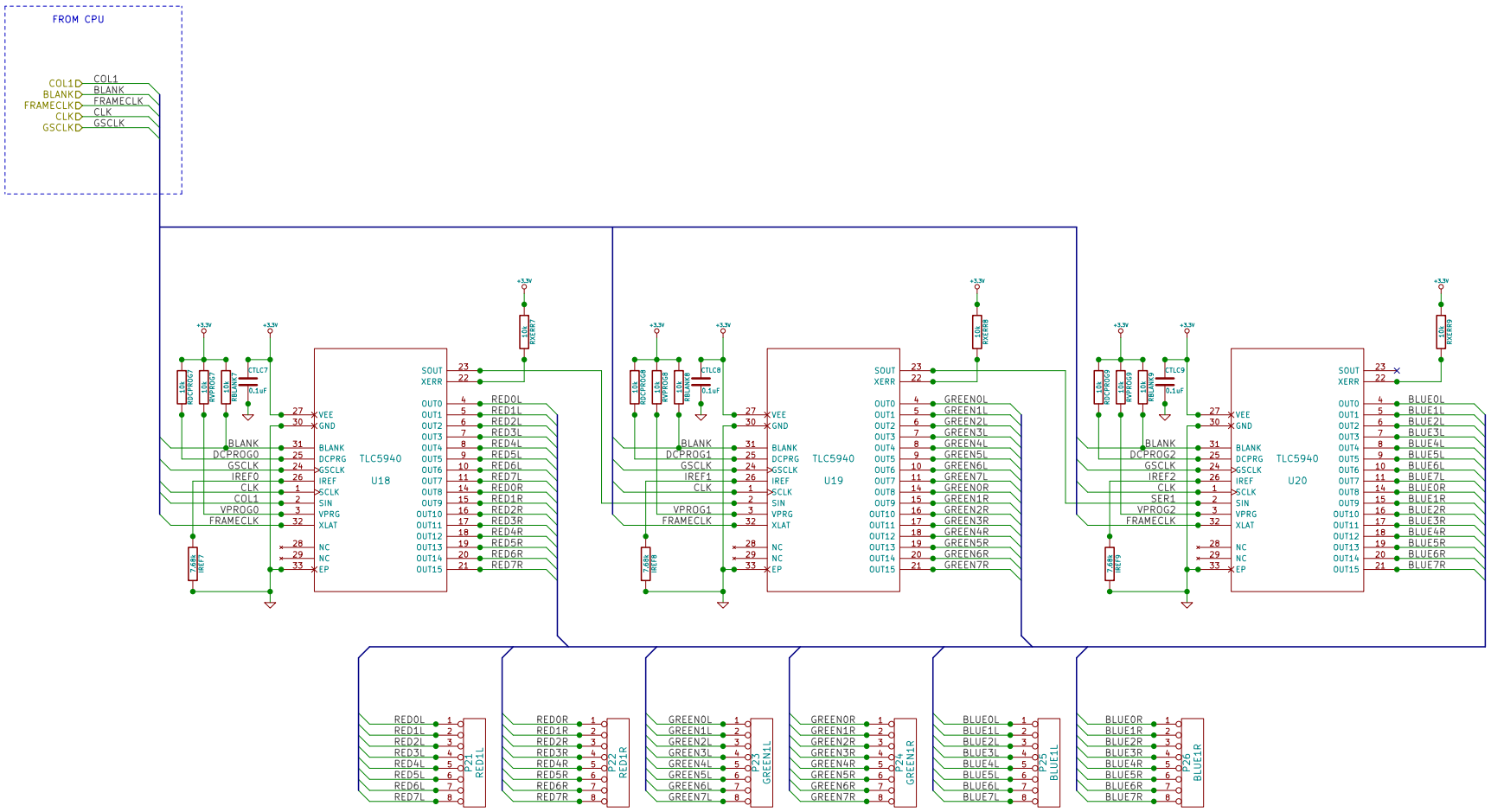

Sheet: /Midnyte Display/Midnyte LED Row 1/
File: midnyte-led-row1.sch

Title: Midnyte LED Array Row 1

Size: A3	Date: 19 oct 2014	Rev: A
KiCad E.D.A. eeschema (2014-10-18 BZR 5203)-product		Id: 5/6

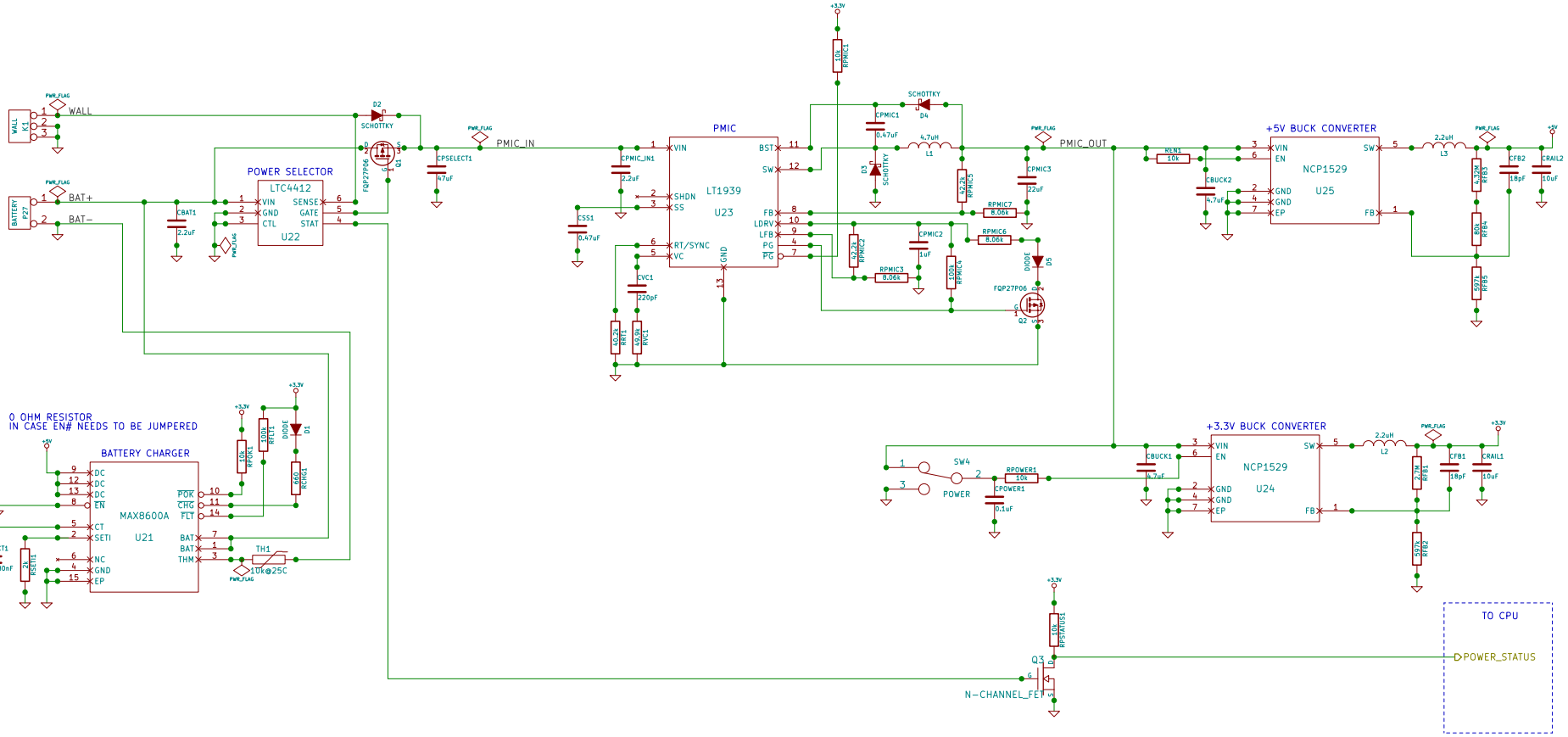

Sheet: /Midnyte Power/
File: midnyte-power.sch

Title: Midnyte Power

Size: A3	Date: 19 oct 2014	Rev: A
KiCad E.D.A. eeschema (2014-10-18 BZR 5203)-product		Id: 6/6