0580_w19_qp_33_Q7

7 **(a)** The diagram shows a shape made from two rectangles.

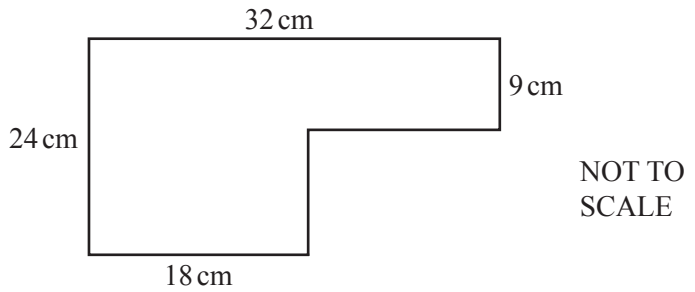

(i) Work out the perimeter.

..... cm [2]

(ii) Work out the area.

..... cm^2 [2]

(b) The diagram shows a triangle between two parallel lines, *AB* and *CD*.

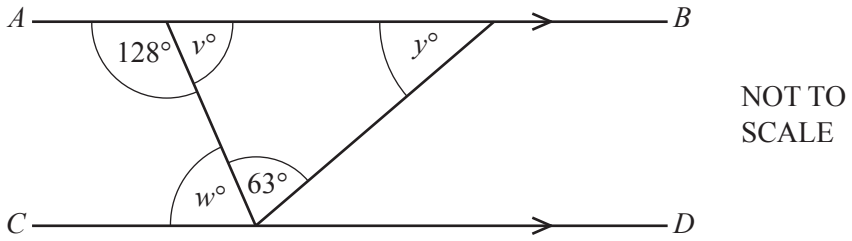

Find the value of

(i) v,

$v =$ ..... [1]

(ii) w,

$w =$ ..... [1]

(iii) y.

$y =$ ..... [1]

0580_w19_qp_33_Q7

(c) These two cuboids have the same volume.

NOT TO SCALE

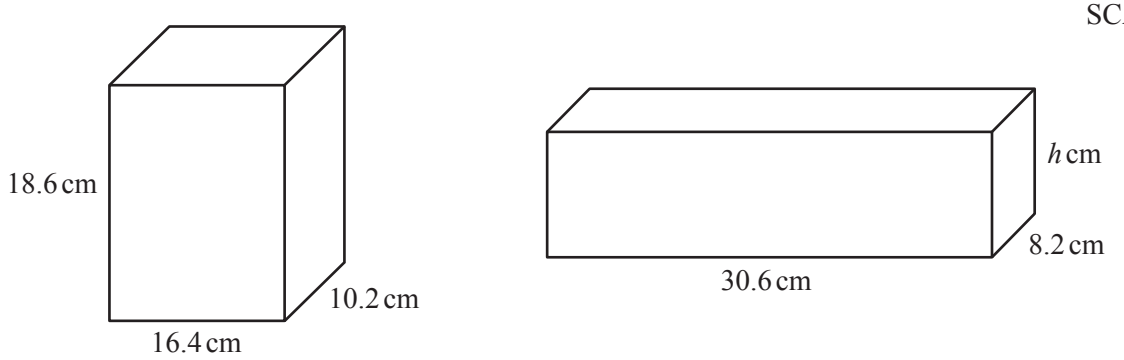

Find the value of h.

h = ... [3]

(d) The diagram shows two similar triangles, ABC and DEF.

NOT TO SCALE

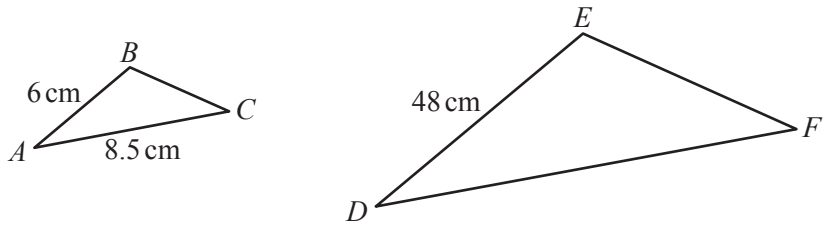

Calculate DF.

DF = ... cm [2]