0580_m20_qp_42_Q8

8 (a)

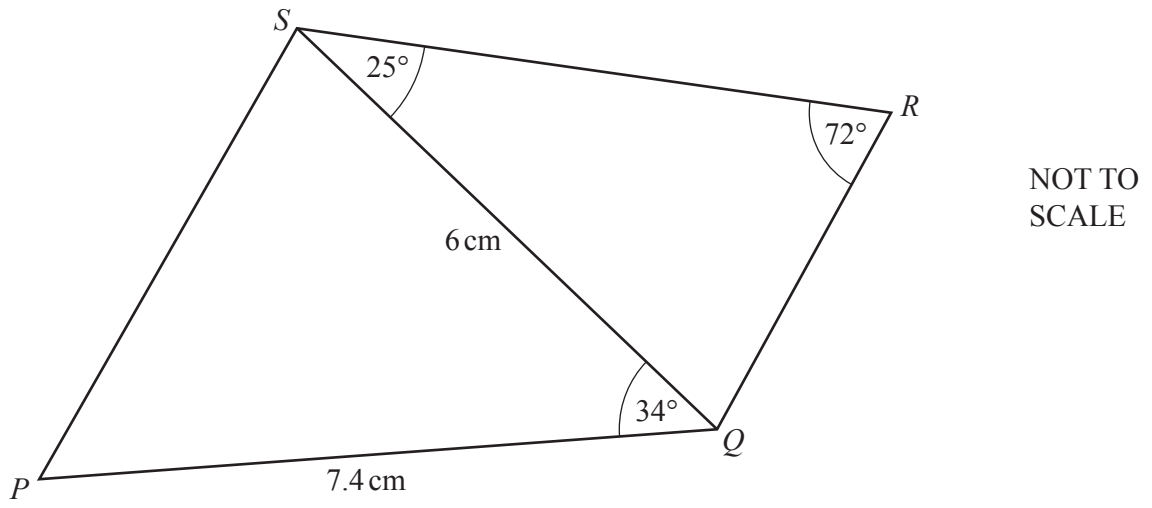

The diagram shows a quadrilateral *PQRS* formed from two triangles, *PQS* and *QRS*.

Calculate

(i) *QR*,

QR = ... cm [3]

(ii) *PS*,

PS = ... cm [3]

(iii) the area of quadrilateral *PQRS*.

..... cm^2 [4]

0580_m20_qp_42_Q8

(b)

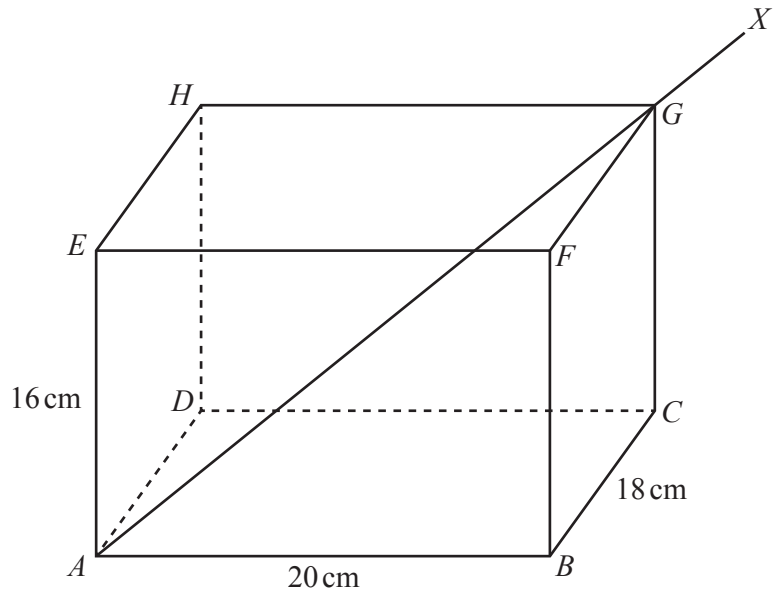

NOT TO SCALE

The diagram shows an open box *ABCDEFGH* in the shape of a cuboid.
$AB = 20$ cm, $BC = 18$ cm and $AE = 16$ cm.
A thin rod *AGX* rests partly in the box as shown.
The rod is 40 cm long.

(i) Calculate *GX*, the length of the rod which is outside the box.

GX = ... cm [4]

(ii) Calculate the angle the rod makes with the base of the box.

..... [3]