0580_w20_qp_12_Q11

11

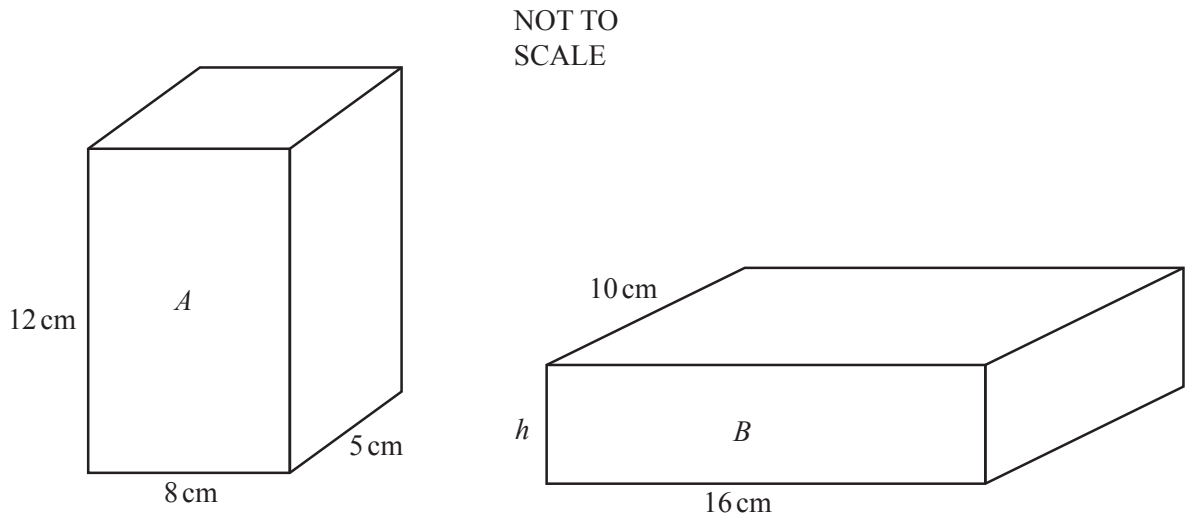

The diagram shows cuboid *A* and cuboid *B*.
Cuboid *A* has the same volume as cuboid *B*.

Calculate the height, *h*, of cuboid *B*.

h = ... cm [3]

0580_w20_ms_12_Q11

Question	Answer	Marks	Partial Marks
11	3	**3**	**M2** for $12 \times 8 \times 5 \div (16 \times 10)$ oe or **M1** for $12 \times 8 \times 5$ or $10 \times 16 \times h$