0580_w20_qp_21_Q11

11

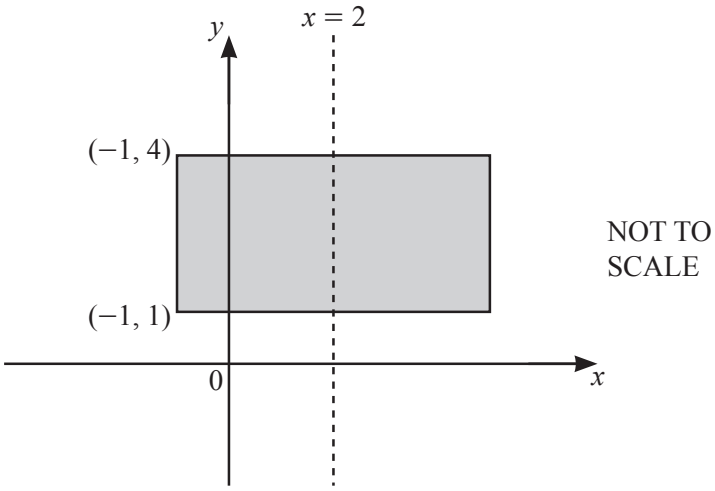

The diagram shows a rectangle with a line of symmetry at $x = 2$.
Two vertices of the rectangle are at $(-1, 1)$ and $(-1, 4)$.

The shaded region is defined by the inequalities $a \leqslant x \leqslant b$ and $c \leqslant y \leqslant d$.

Find the values of a, b, c and d.

$a =$ .....

$b =$ .....

$c =$ .....

$d =$ ..... [2]