0580_s21_qp_42_Q8

8 **(a)** A cuboid has length L cm, width W cm and height H cm.

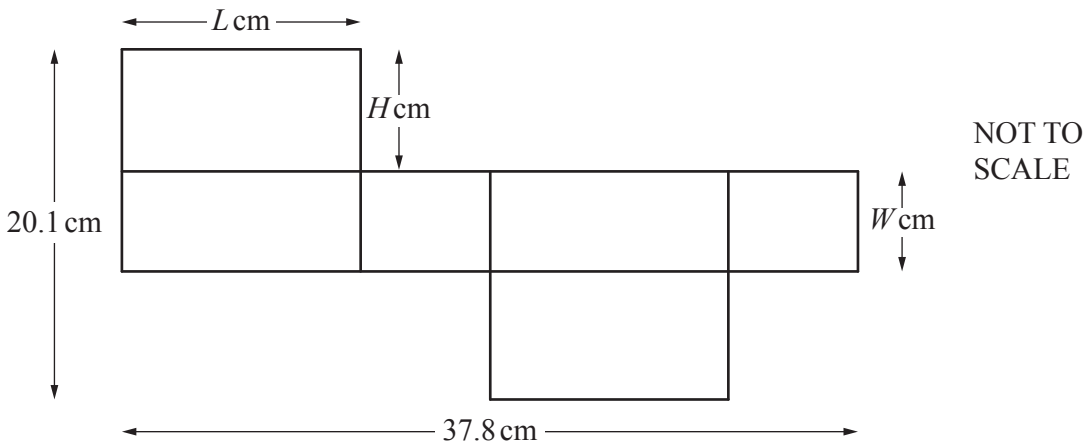

The diagram shows the net of this cuboid.
The ratio $W : L = 1 : 2$.

Find the value of L, the value of W and the value of H.

$L =$ .....

$W =$ .....

$H =$ ..... [5]

0580_s21_qp_42_Q8

(b)

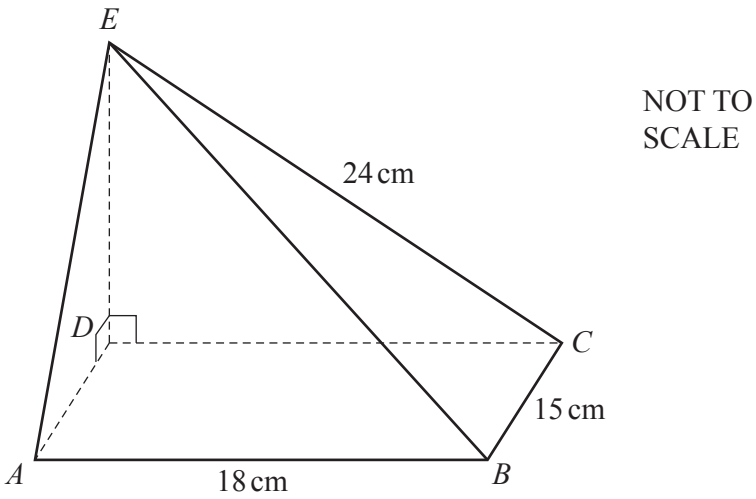

The diagram shows a solid pyramid with a rectangular base *ABCD*.
E is vertically above *D*.
Angle *EDC* = angle *EDA* = 90°.
AB = 18 cm, *BC* = 15 cm and *EC* = 24 cm.

(i) The pyramid is made of wood and has a mass of 800 g.

Calculate the density of the wood.
Give the units of your answer.

[The volume, *V*, of a pyramid is $V = \frac{1}{3} \times$ area of base $\times$ height.]
[Density = mass ÷ volume]

.... [5]

(ii) Calculate the angle between *BE* and the base of the pyramid.

..... [4]