0580_w21_qp_42_Q7

7 **(a)** The diagram shows a container for storing grain.

The container is made from a hemisphere, a cylinder and a cone, each with radius 2 m. The height of the cylinder is 5.2 m and the height of the cone is h m.

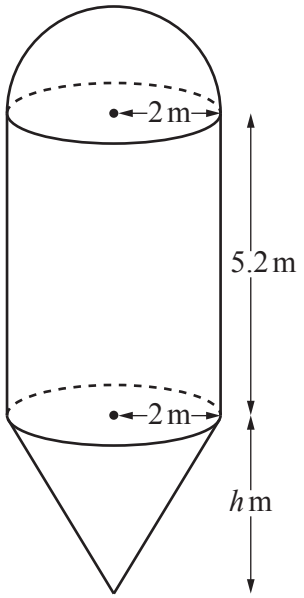

NOT TO SCALE

(i) Calculate the volume of the hemisphere.
Give your answer as a multiple of π.

[The volume, V, of a sphere with radius r is $V = \frac{4}{3}\pi r^3$.]

..... m^3 [2]

(ii) The total volume of the container is $\frac{88\pi}{3}$ m^3.

Calculate the value of h.

[The volume, V, of a cone with radius r and height h is $V = \frac{1}{3}\pi r^2 h$.]

$h =$ ..... [4]

(iii) The container is full of grain.
Grain is removed from the container at a rate of 35 000 kg per hour.
$1\,m^3$ of grain has a mass of 620 kg.

Calculate the time taken to empty the container.
Give your answer in hours and minutes.

..... h ..... min [3]

(b)

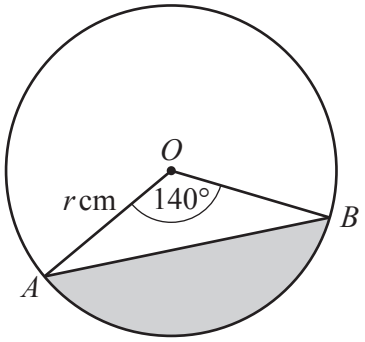

NOT TO SCALE

A and B are points on a circle, centre O, radius r cm.
The area of the shaded segment is $65\,cm^2$.

Calculate the value of r.

r = ... [4]