0580_w23_qp_41_Q8

8 (a)

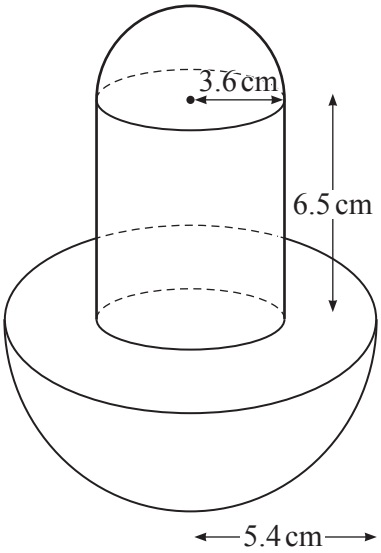

NOT TO SCALE

The diagram shows a solid formed by joining two hemispheres and a cylinder.
The radius of the large hemisphere is 5.4 cm.
The radius of the small hemisphere and the radius of the cylinder are both 3.6 cm.
The height of the cylinder is 6.5 cm.

(i) Show that the volume of the solid is $692\,\text{cm}^3$, correct to the nearest cubic centimetre.

[The volume, V, of a sphere with radius r is $V = \frac{4}{3}\pi r^3$.]

[4]

(ii) A mathematically similar solid is made of silver.
In this solid, the cylinder has radius 0.6 cm.
$1\,\text{cm}^3$ of silver has a mass of 10.49 grams.

Calculate the total mass of this silver solid.

..... g [4]

0580_w23_qp_41_Q8

(b)

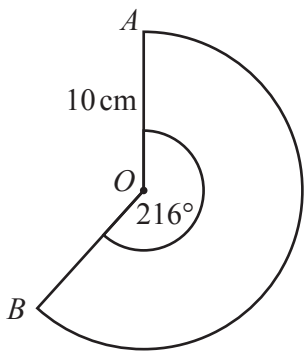

NOT TO SCALE

AOB is a sector of a circle, centre O.
$AO = 10\,\text{cm}$ and the sector angle is 216°.

(i) Calculate the length of the arc of this sector.
Give your answer as a multiple of π.

.....cm [2]

(ii) A cone is made from this sector by joining OA to OB.

Calculate the volume of the cone.
[The volume, V, of a cone with radius r and height h is $V = \frac{1}{3}\pi r^2 h$.]

..... cm^3 [4]