0580_w23_qp_42_Q4

4 **(a)**

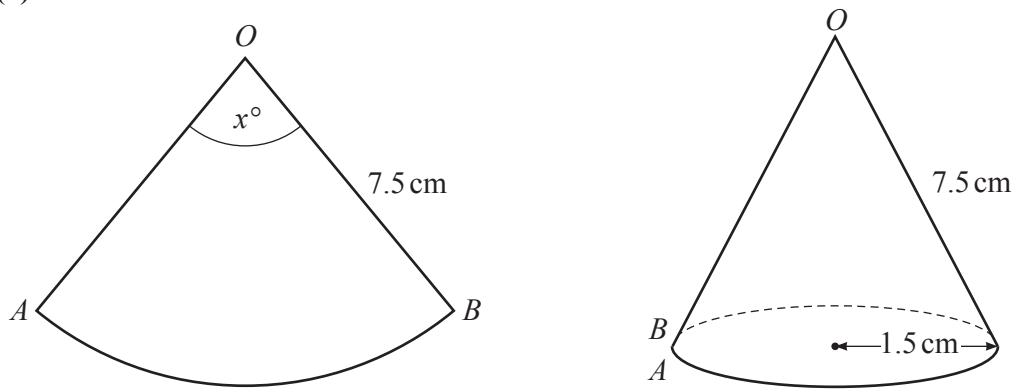

NOT TO SCALE

The diagram shows a sector of a circle that is made into a cone by joining OA to OB.
The sector angle is $x°$ and the radius of the sector is 7.5 cm.
The base radius of the cone is 1.5 cm.

Calculate the value of x.

$x =$ ..... [3]

(b)

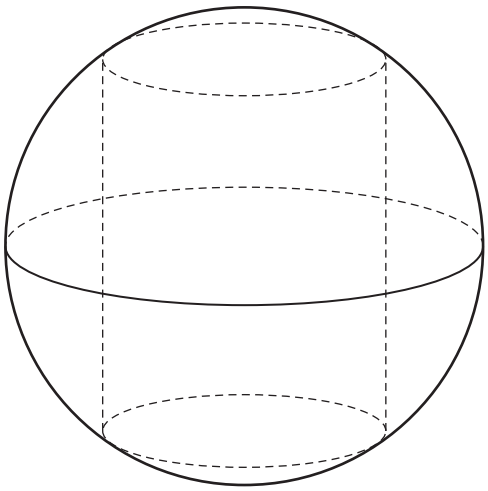

NOT TO SCALE

The diagram shows a cylinder with radius 8 cm inside a sphere with radius 17 cm.
Both ends of the cylinder touch the curved surface of the sphere.

(i) Show that the height of the cylinder is 30 cm.

[2]

(ii) Calculate the volume of the cylinder as a percentage of the volume of the sphere.

[The volume, V, of a sphere with radius r is $V = \frac{4}{3}\pi r^3$.]

..... % [4]

(c)

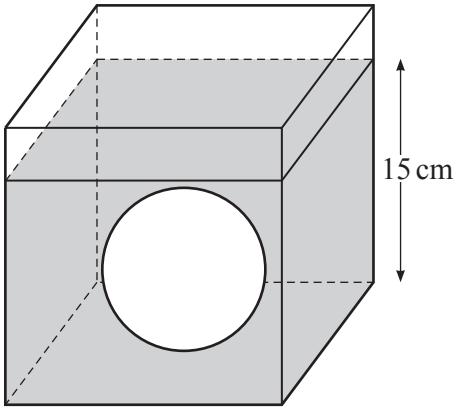

NOT TO SCALE

The diagram shows a solid sphere with radius 6 cm inside a cube with side length 20 cm.
The cube contains water to a depth of 15 cm.
The sphere is removed.

Calculate the new depth of water in the cube.

[The volume, V, of a sphere with radius r is $V = \frac{4}{3}\pi r^3$.]

..... cm [3]