3 **(a)** In triangle DEF, $DE = 6\,\text{cm}$ and $DF = 4.8\,\text{cm}$.

Using a ruler and compasses only, construct triangle DEF.
Leave in your construction arcs.
The line EF has been drawn for you.

[2]

(b)

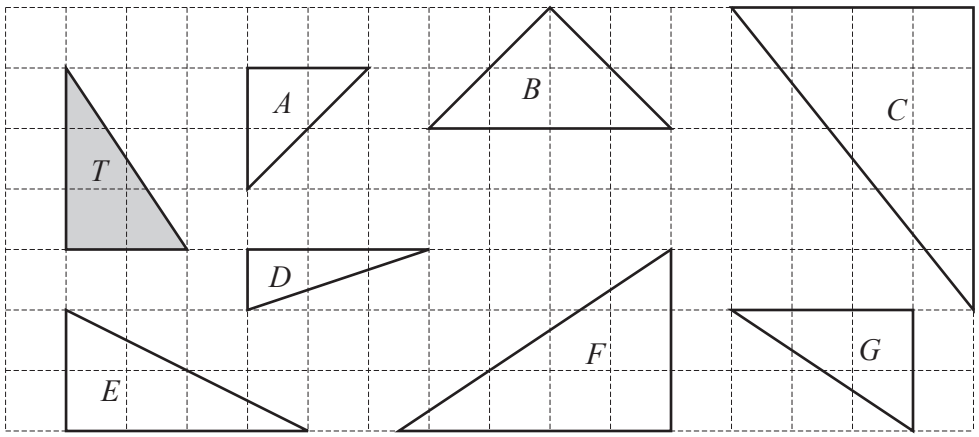

(i) Write down the letter of the triangle that is congruent to triangle T.

..... [1]

(ii) Write down the letter of the triangle that is similar but not congruent to triangle T.

..... [1]

0580_m24_qp_32_Q3

(c)

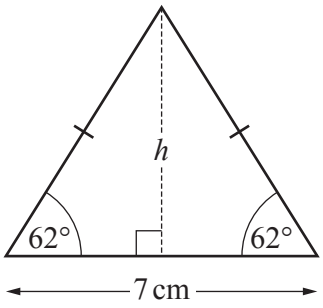

NOT TO SCALE

The diagram shows an isosceles triangle.

(i) Show that the perpendicular height, h, is 6.58 cm, correct to 3 significant figures.

[3]

(ii) Calculate the area of the triangle.
Give the units of your answer.

.... [3]

(iii) Kalpit tries to arrange some of these triangles to make a regular polygon with centre O.

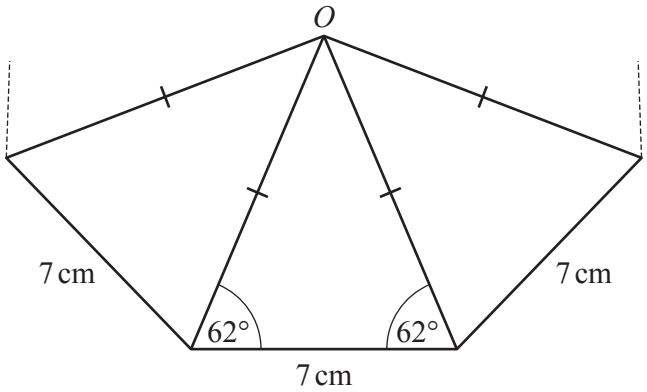

NOT TO SCALE

Show that Kalpit cannot make a regular polygon.

[3]