9 **(a)**

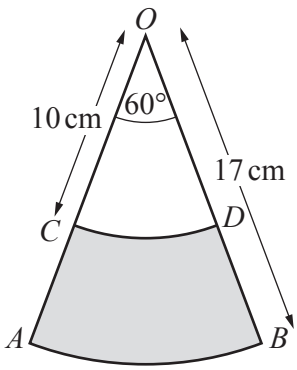

NOT TO SCALE

OAB is a sector of a circle, centre *O*, radius 17 cm.
OCD is a sector of a circle, centre *O*, radius 10 cm.
OCA and *ODB* are straight lines and angle $AOB = 60°$.

The perimeter of the shaded shape *ABDC* can be written in the form $(a\pi + b)$ cm.

Find the value of *a* and the value of *b*.

$a =$ .....

$b =$ ..... [3]

(b)

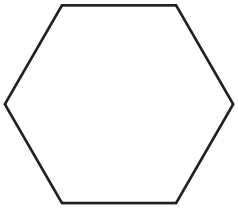

NOT TO SCALE

The diagram shows a regular hexagon.
The area of the hexagon is 127.3 cm^2.

(i) Show that the length of one side of the hexagon is 7.0 cm, correct to 1 decimal place.

[4]

(ii) The hexagon is the cross-section of a prism of length 10 cm.

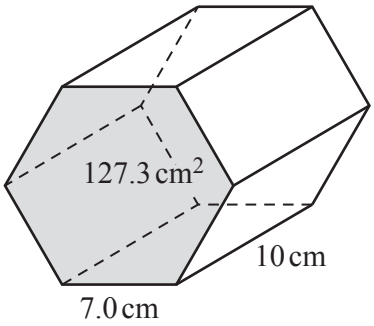

NOT TO SCALE

(a) Find the volume of the prism.

..... cm^3 [1]

(b) Calculate the surface area of the prism.

..... cm^2 [2]