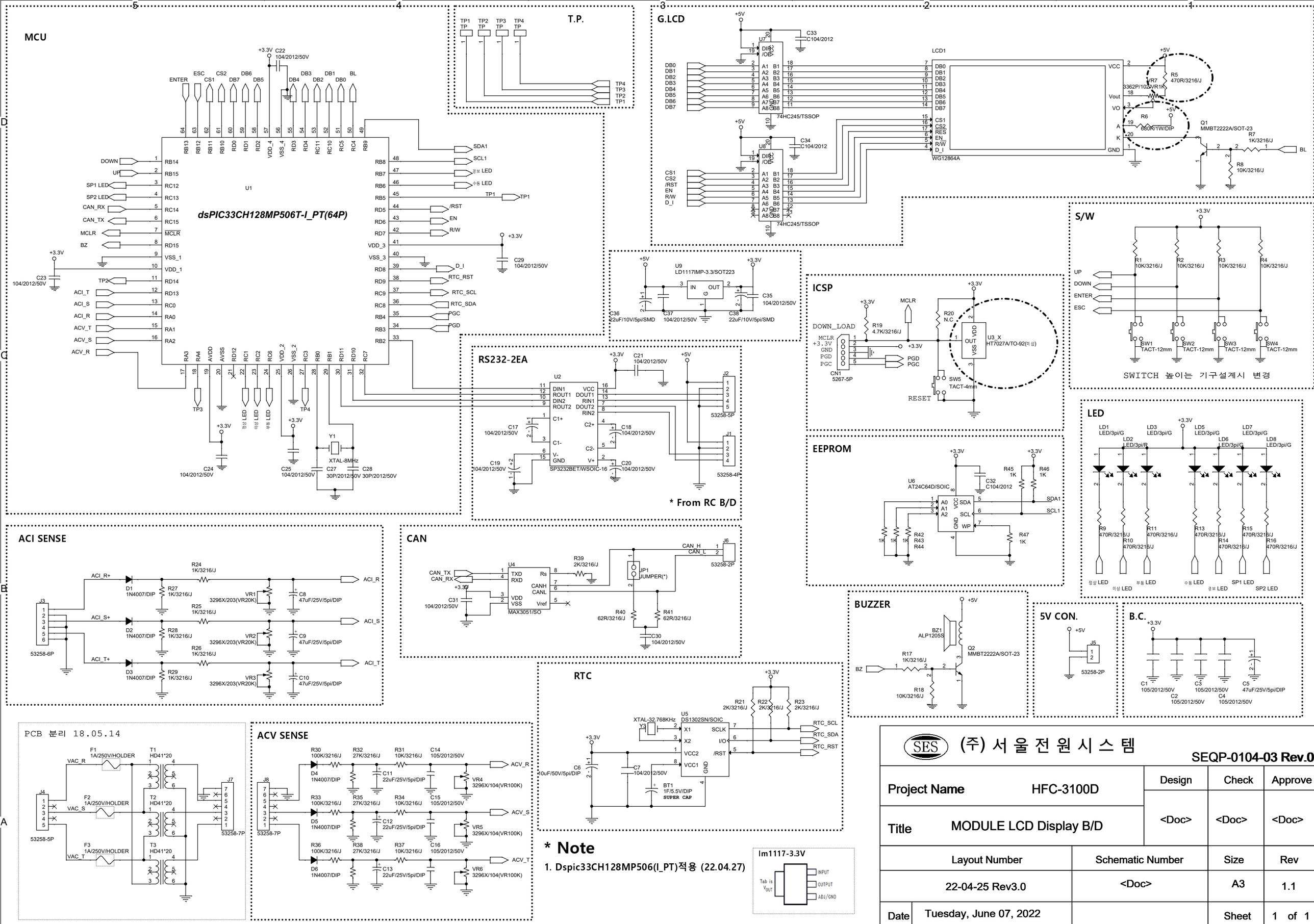
MCU
dsPIC33CH128MP506T-I_PT(64P)
U1
T.P.
G.LCD
LCD1
WG12864A
74HC245/TSSOP
U7
U8
S/W
SWITCH 높이는 기구설계시 변경
ICSP
DOWN_LOAD
CN1
5267-5P
U3_X
HT7027A/TO-92(미삼)
RESET
EEPROM
U6
AT24C64D/SOIC
LED
RS232-2EA
U2
SP3232BET/WSOIC-16
53258-5P
53258-4P
* From RC B/D
ACI SENSE
53258-6P
CAN
U4
MAX3051/SO
53258-2P
BUZZER
BZ1
ALP1205S
5V CON.
53258-2P
B.C.
RTC
U5
DS1302SN/SOIC
XTAL-32.768KHz
BT1
1F/5.5V/DIP
SUPER CAP
PCB 분리 18.05.14
ACV SENSE
53258-5P
53258-7P
* Note
1. Dspic33CH128MP506(I_PT)적용 (22.04.27)
lm1117-3.3V
(주) 서 울 전 원 시 스 템
SEQP-0104-03 Rev.0
Project Name
HFC-3100D
Design
Check
Approve
Title
MODULE LCD Display B/D
<Doc>
Layout Number
Schematic Number
Size
Rev
22-04-25 Rev3.0
A3
1.1
Date
Tuesday, June 07, 2022
Sheet
1 of 1