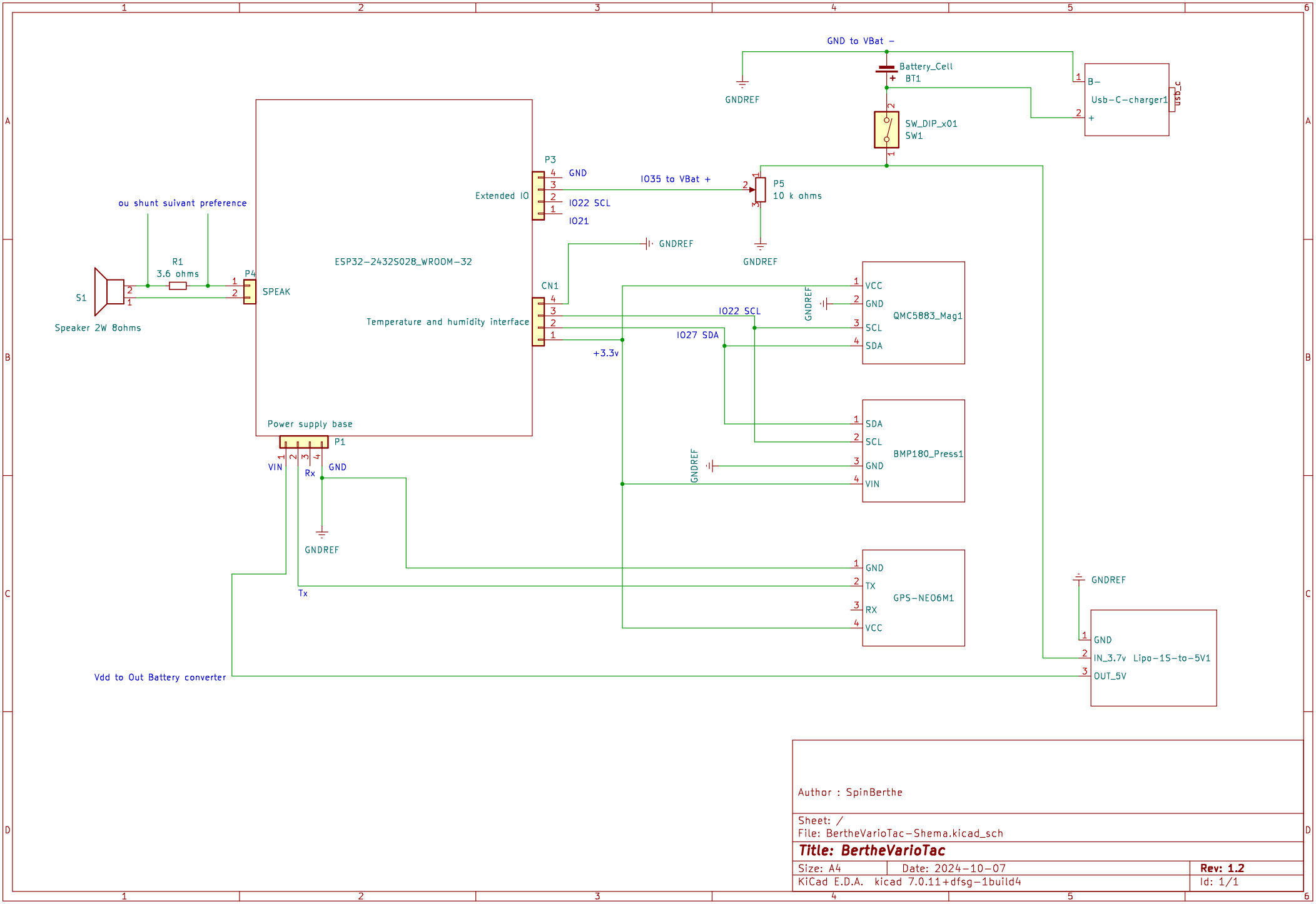

Author : SpinBerthe

Sheet: /
File: BertheVarioTac-Shema.kicad_sch

Title: BertheVarioTac

Size: A4	Date: 2024-10-07	**Rev: 1.2**
KiCad E.D.A. kicad 7.0.11+dfsg-1build4		Id: 1/1