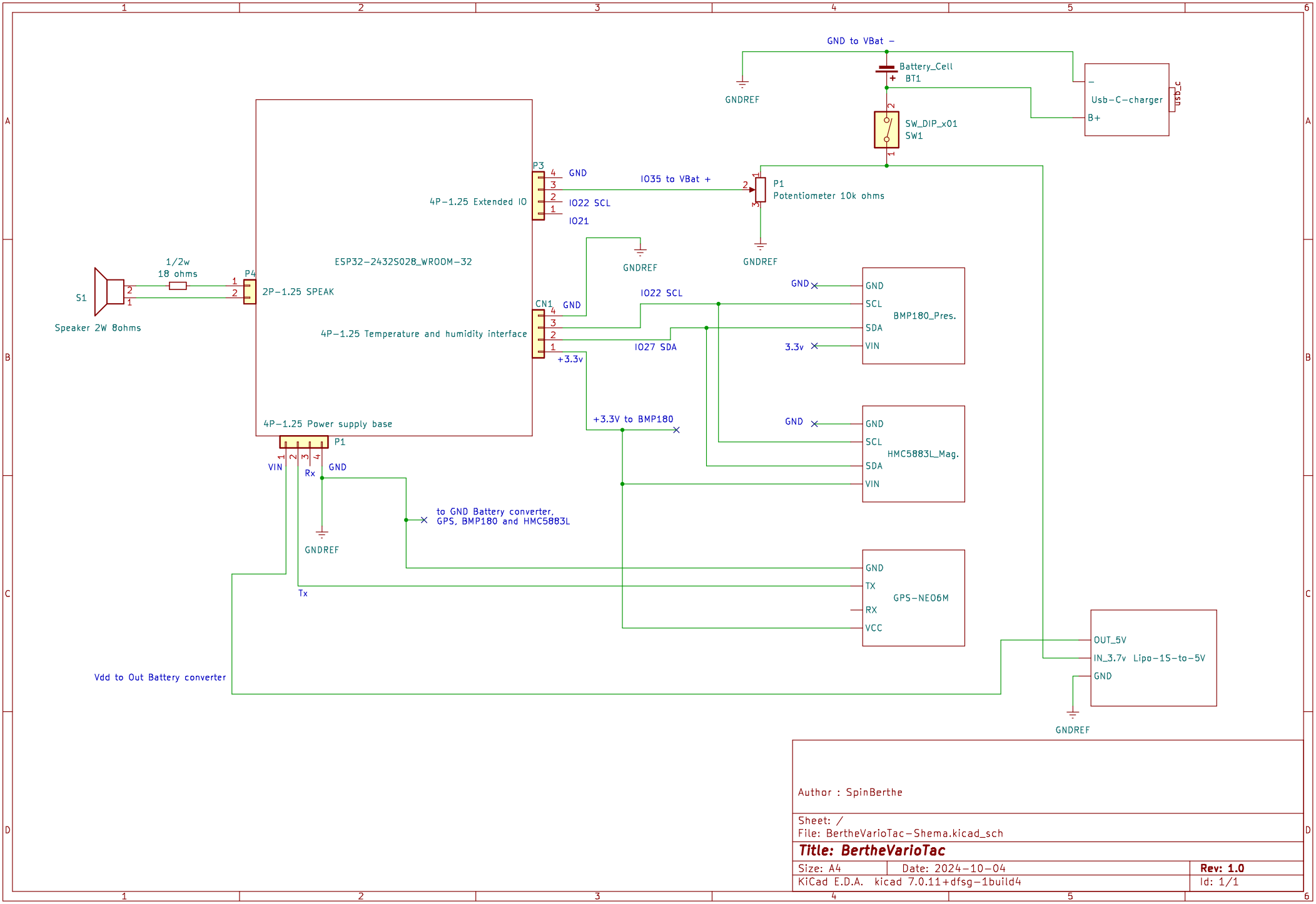

Author : SpinBerthe

Sheet: /
File: BertheVarioTac−Shema.kicad_sch

Title: BertheVarioTac

Size: A4	Date: 2024−10−04	**Rev: 1.0**
KiCad E.D.A. kicad 7.0.11+dfsg−1build4		Id: 1/1