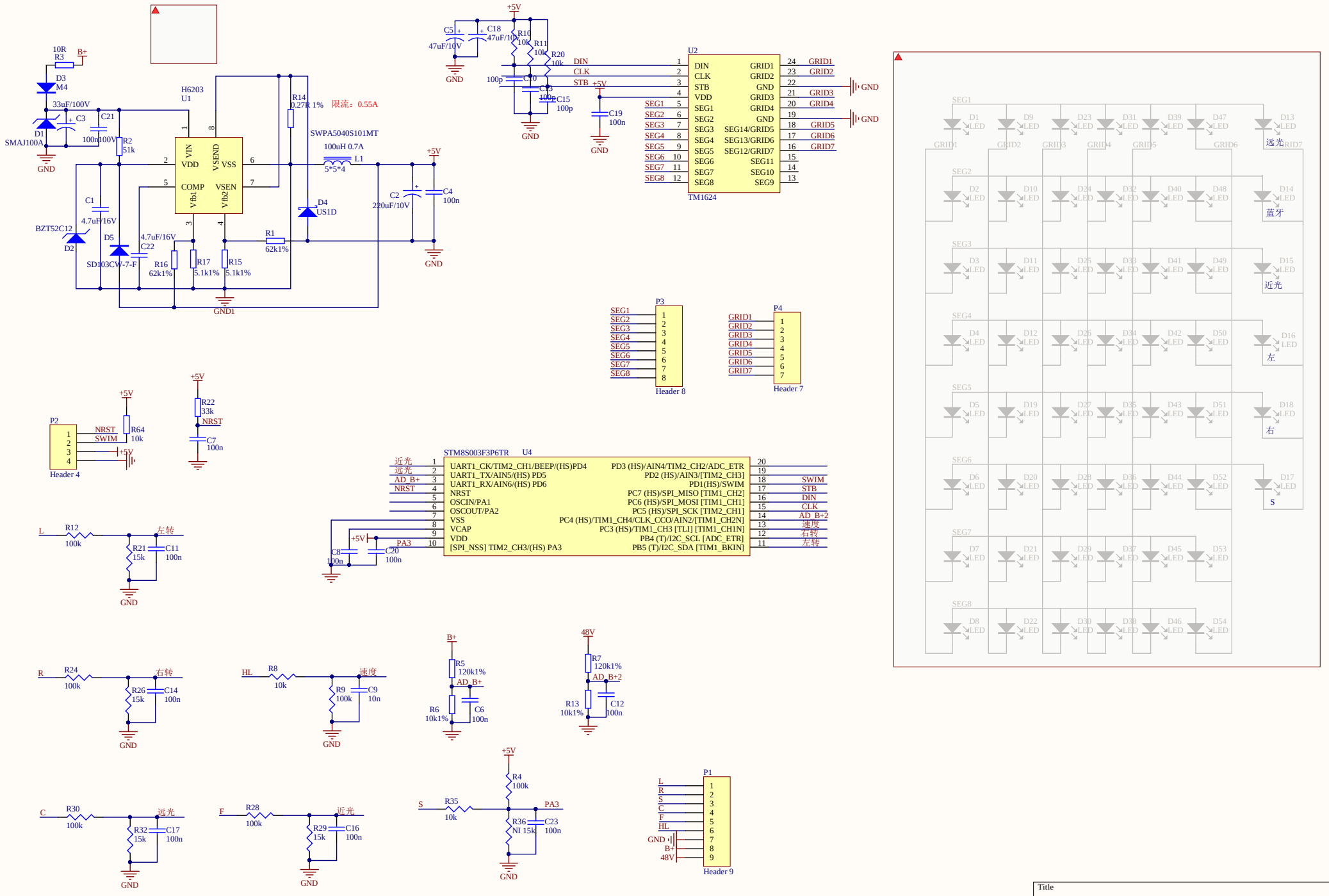

Title		
Size A3	Number	Revision
Date: 2017/12/15		Sheet of
File: M:\HC\..\MR9737V2.0.SchDoc		Drawn By: