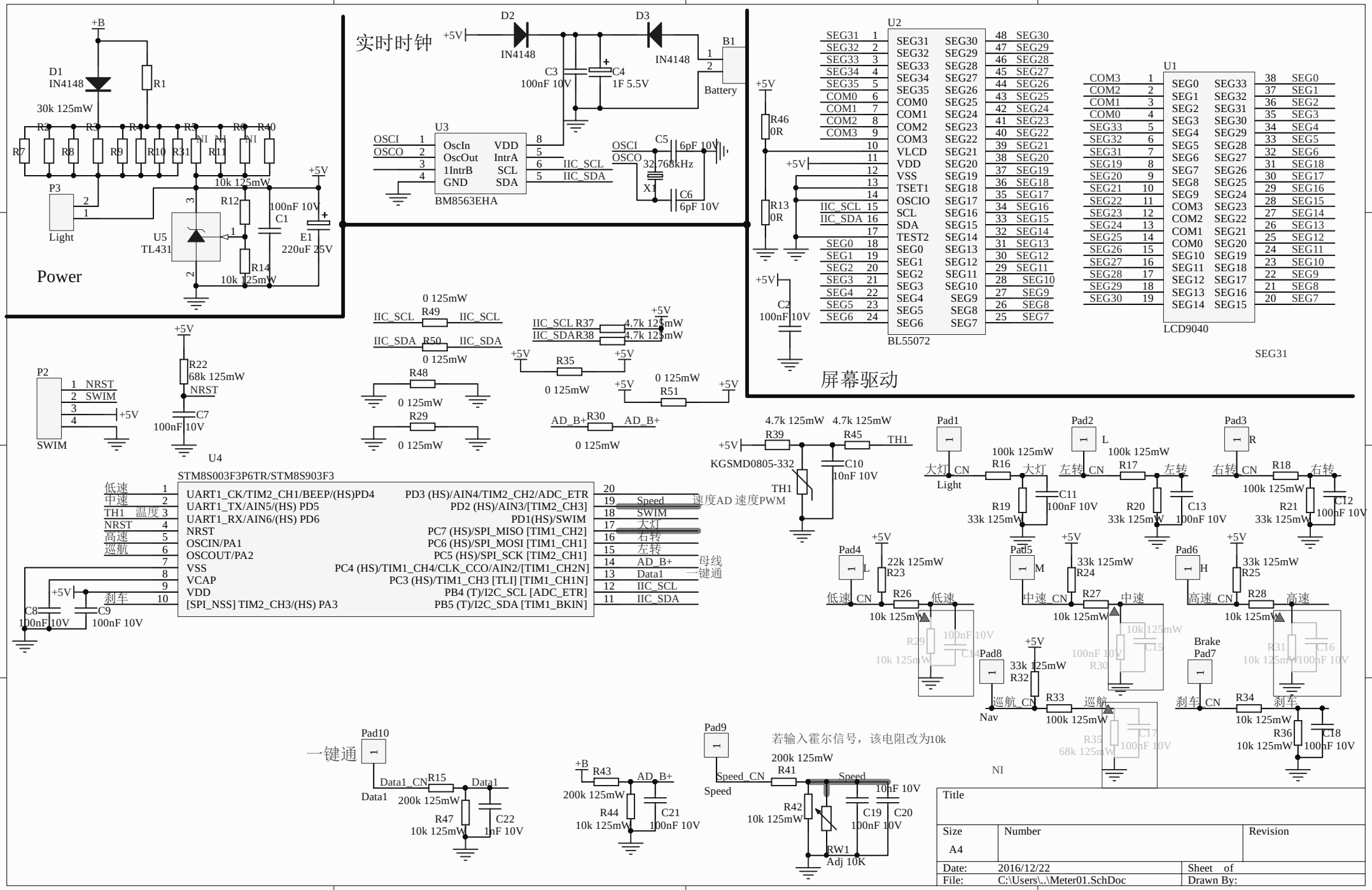
Power
实时时钟
屏幕驱动
BM8563EHA
BL55072
LCD9040
STM8S003F3P6TR/STM8S903F3
一键通
若输入霍尔信号，该电阻改为10k
Title
Size A4
Number
Revision
Date: 2016/12/22
File: C:\Users\..\Meter01.SchDoc
Sheet of
Drawn By: