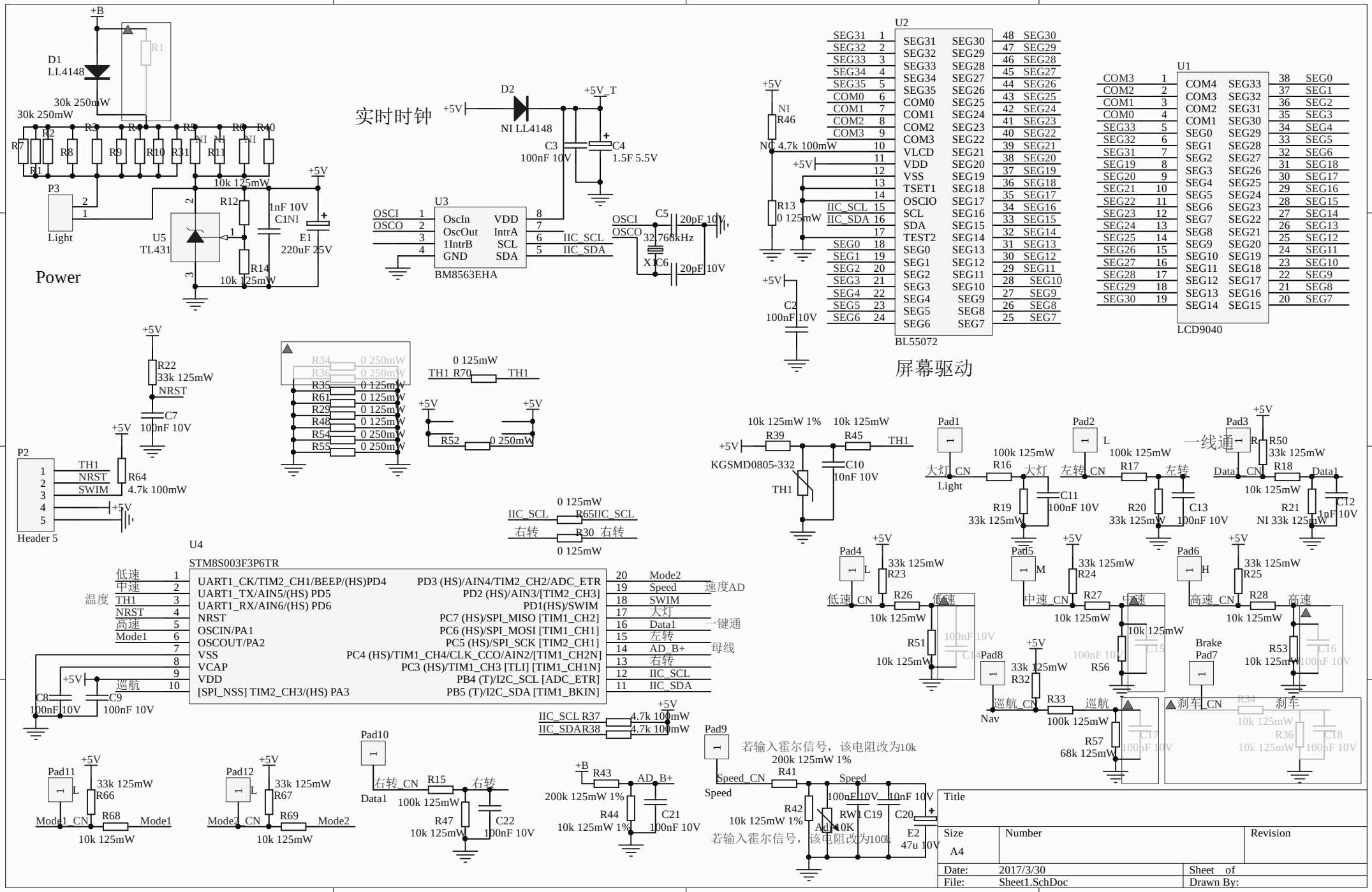
Power
实时时钟
屏幕驱动
U1 LCD9040
U2 BL55072
U3 BM8563EHA
U4 STM8S003F3P6TR
D1 LL4148
D2 NI LL4148
P2 Header 5
P3 Light
U5 TL431
X1 32.768kHz
KGSMD0805-332
一线通
Title
Size A4
Number
Revision
Date: 2017/3/30
File: Sheet1.SchDoc
Sheet of
Drawn By: