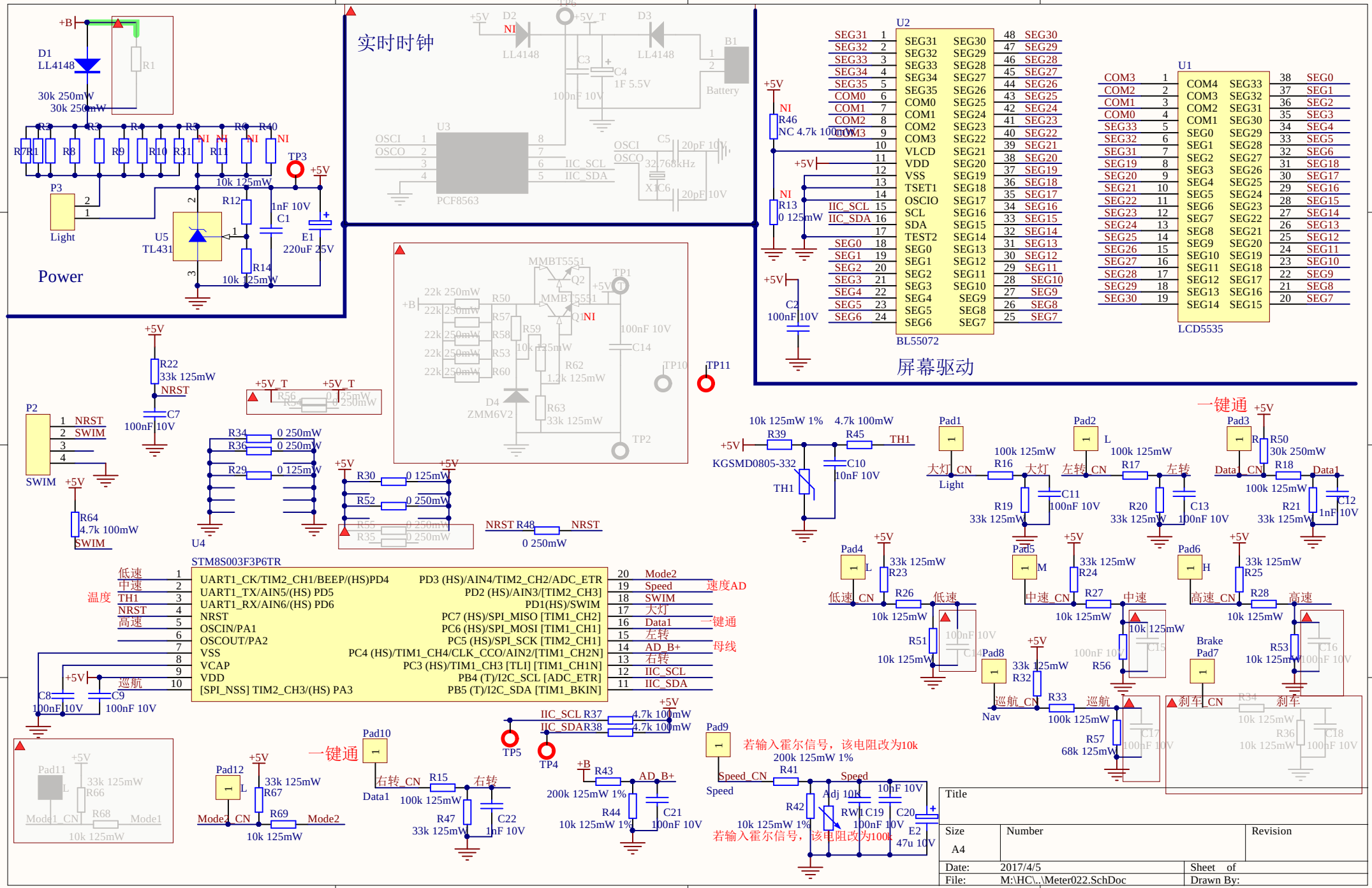
Power
实时时钟
屏幕驱动
一键通
STM8S003F3P6TR
PCF8563
BL55072
LCD5535
Title
Size A4
Number
Revision
Date: 2017/4/5
File: M:\HC\..\Meter022.SchDoc
Sheet of
Drawn By:

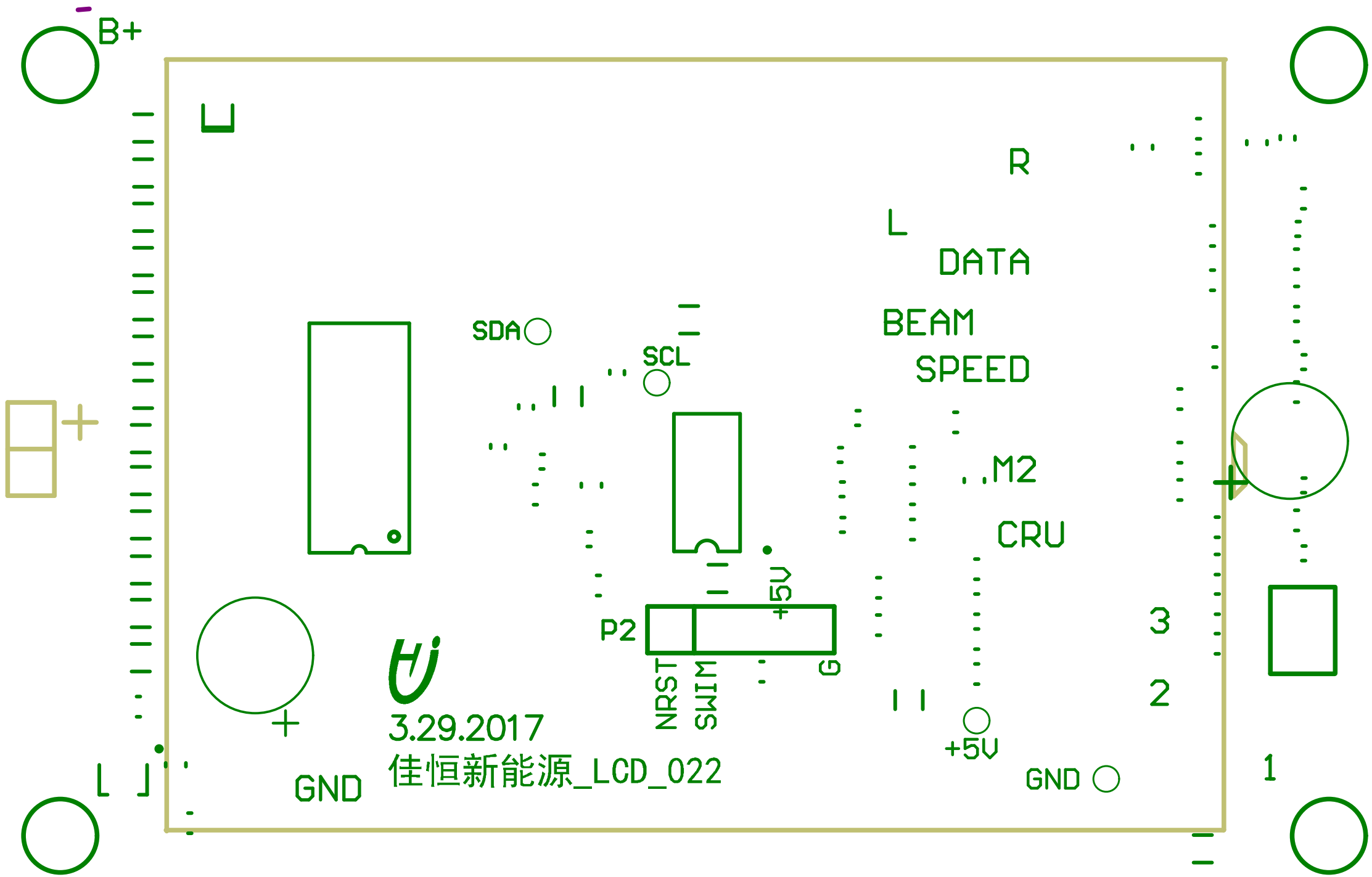
B+
R
L
DATA
BEAM
SPEED
SDA
SCL
M2
CRU
+5V
P2
NRST
SWIM
G
3
2
1
+5V
GND
GND
3.29.2017
佳恒新能源_LCD_022