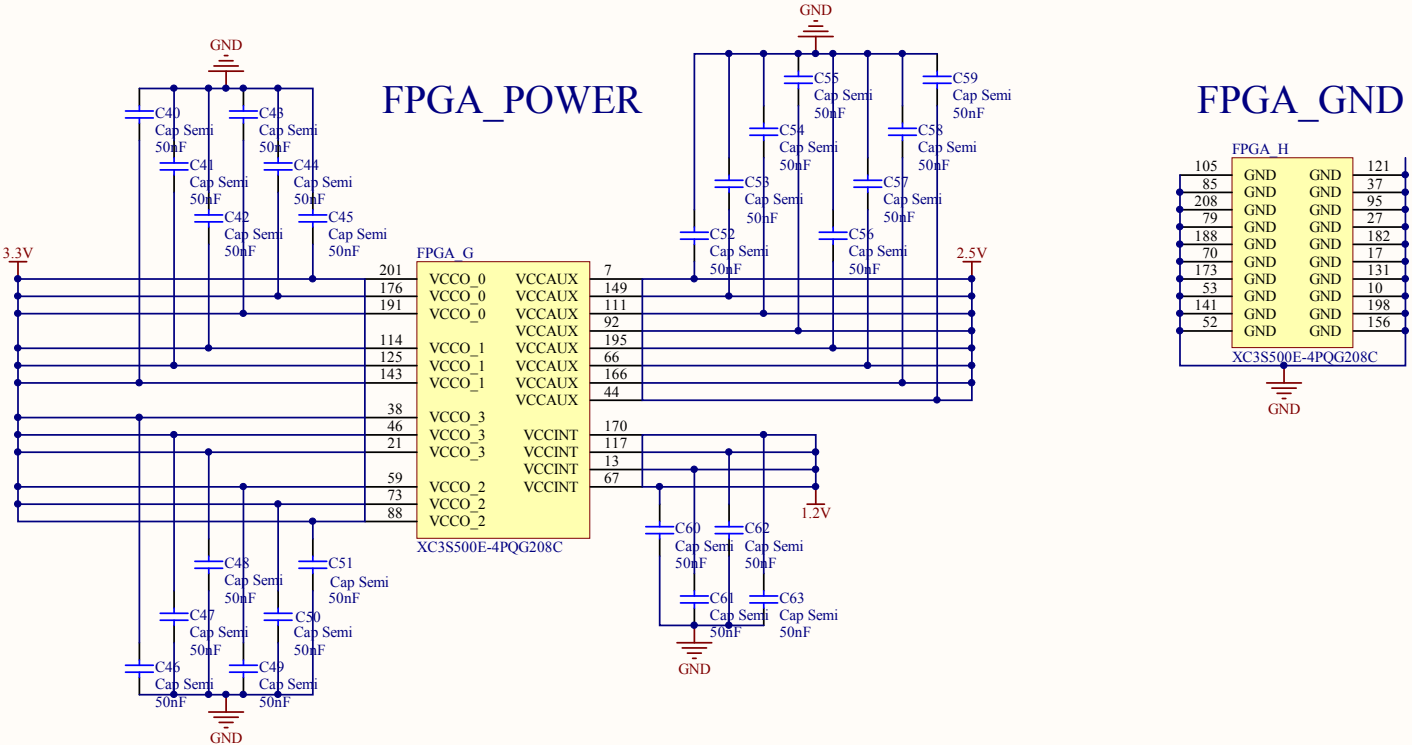
FPGA_POWER
FPGA_GND
FPGA_G
XC3S500E-4PQG208C
FPGA_H
XC3S500E-4PQG208C
3.3V
2.5V
1.2V
GND
VCCO_0
VCCO_1
VCCO_2
VCCO_3
VCCAUX
VCCINT
C40 Cap Semi 50nF
C41 Cap Semi 50nF
C42 Cap Semi 50nF
C43 Cap Semi 50nF
C44 Cap Semi 50nF
C45 Cap Semi 50nF
C46 Cap Semi 50nF
C47 Cap Semi 50nF
C48 Cap Semi 50nF
C49 Cap Semi 50nF
C50 Cap Semi 50nF
C51 Cap Semi 50nF
C52 Cap Semi 50nF
C53 Cap Semi 50nF
C54 Cap Semi 50nF
C55 Cap Semi 50nF
C56 Cap Semi 50nF
C57 Cap Semi 50nF
C58 Cap Semi 50nF
C59 Cap Semi 50nF
C60 Cap Semi 50nF
C61 Cap Semi 50nF
C62 Cap Semi 50nF
C63 Cap Semi 50nF