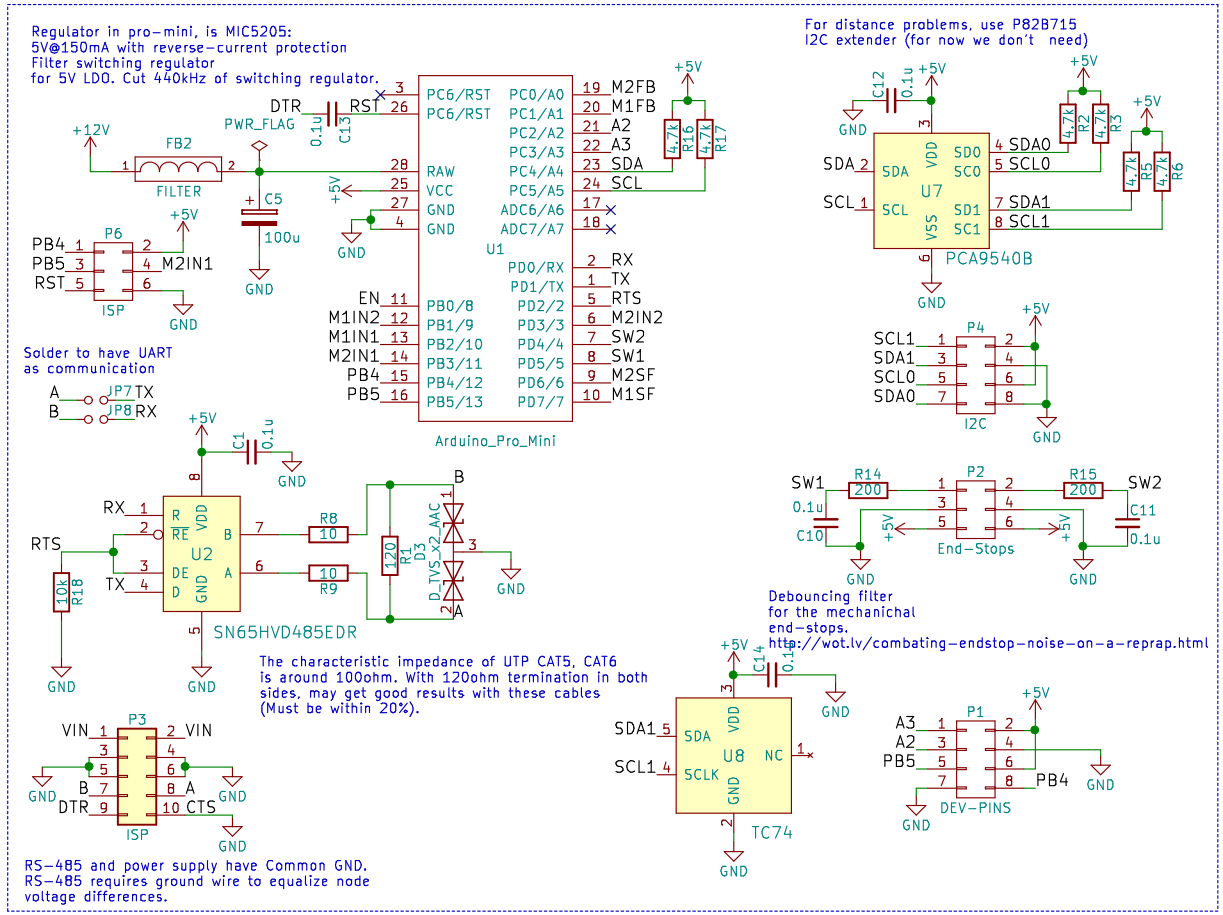

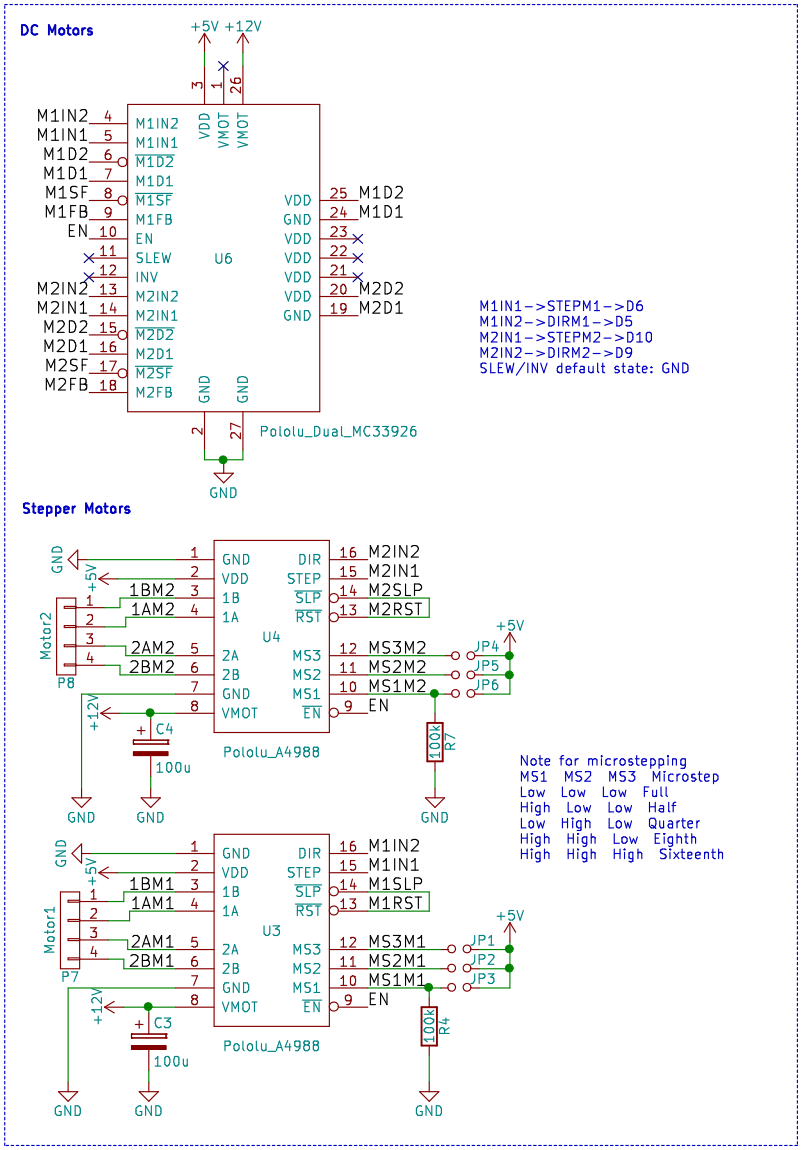

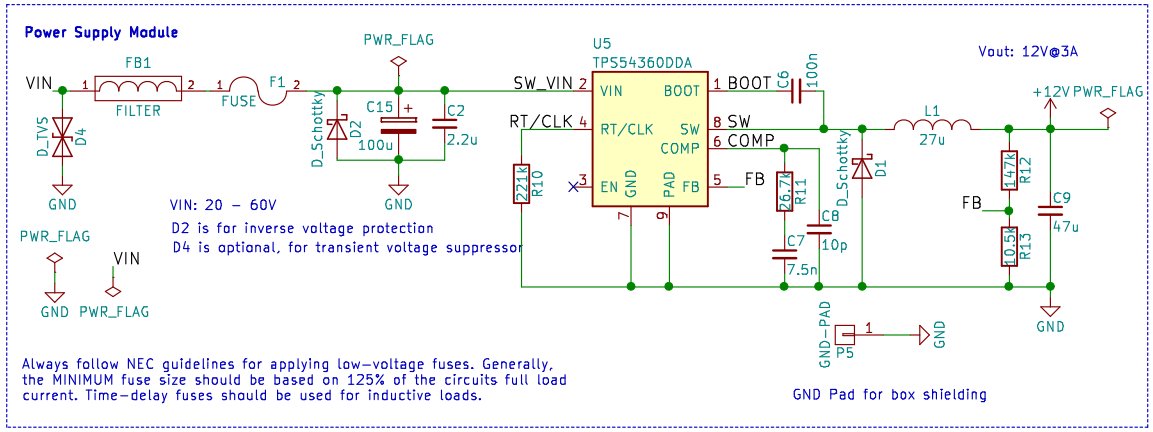

Libre Space Foundation

Sheet: /

File: satnogs_controller.sch

Title: SatNOGS Rotator Controller

Size: A4	Date: 2016-12-11	Rev: v2
KiCad E.D.A. kicad 4.0.7-e2-637658ubuntu16.04.1		Id: 1/1