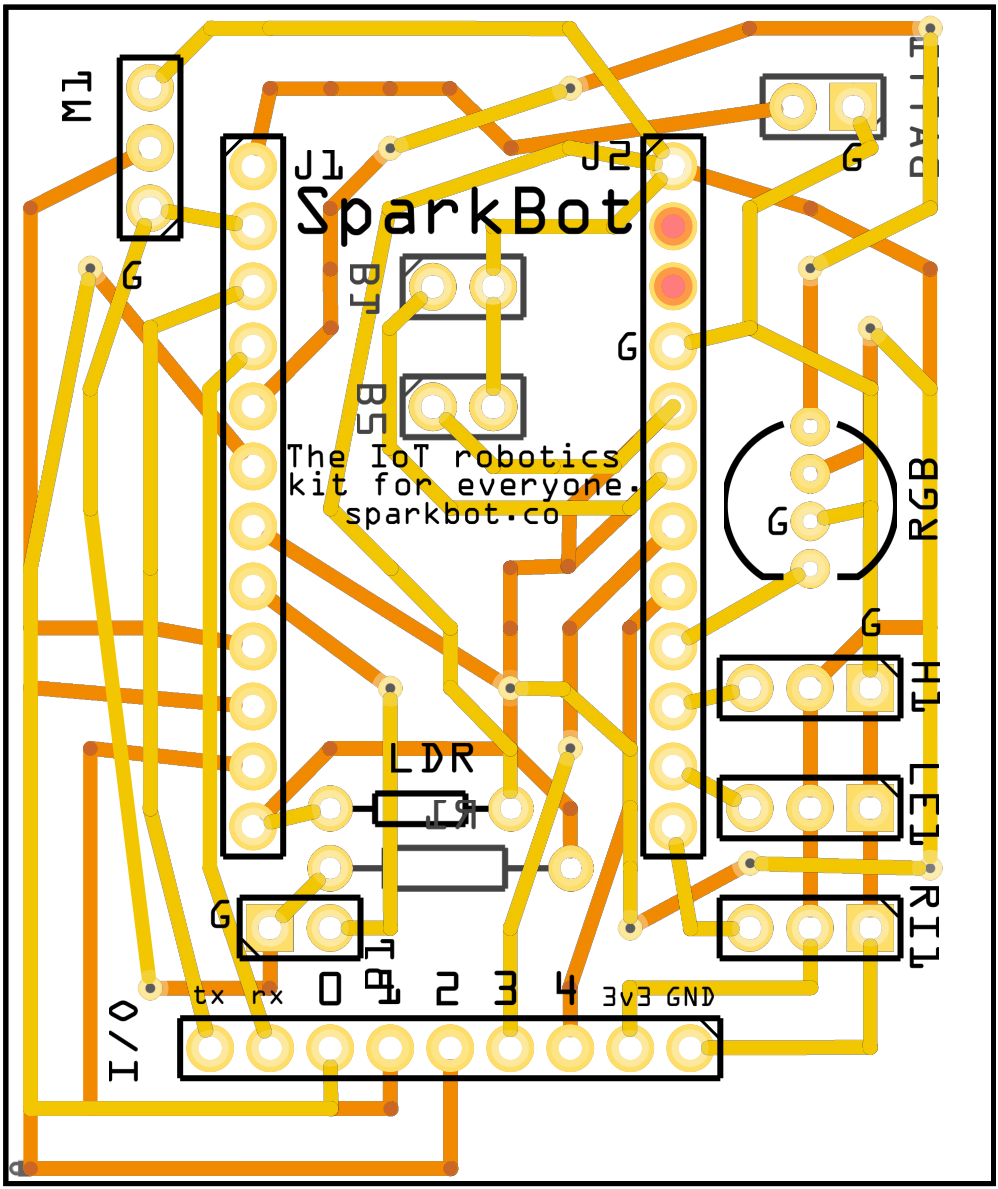
FTDI
G
J2
J1
SparkBot
M1
G
B1
B5
G
The IoT robotics
kit for everyone.
sparkbot.co
RGB
G
G
TH
LEDR
LDR
R1
G
T1
I/O
tx rx 0 1 2 3 4 3v3 GND

fritzing