Internet of Things

Giuseppe Magnifico

2026

1 Model, definition and insight of sensing

A sensor including a transducer and signal conditioning can often be approximately modeled by an affine funzion before the ACD stage.

2 Micro Controller Units

MCUs are designed for application-specific tasks, often with real-time computing constraints. They are typically used in embedded systems, where they control specific functions within a larger system. MCUs are characterized by their low power consumption, small size, and integrated peripherals, making them ideal for applications such as home automation, wearable devices, and industrial control systems.

Examples

- **Arduino**: A popular open-source platform based on easy-to-use hardware and software. It is widely used for prototyping and educational purposes.
- **Raspberry Pi Pico**: A low-cost microcontroller board based on the RP2040 chip, designed for embedded applications.
- **ESP8266/ESP32**: Wi-Fi-enabled microcontrollers that are commonly used in IoT projects for their wireless communication capabilities.
- **BLE Microcontrollers**: Such as the Nordic Semiconductor nRF52 series, which are designed for low-power Bluetooth applications.
- **NXP LCP1102/1104**: 32-bit microcontrollers designed for low-power applications, 32KB flash memory, 8KB RAM, and various peripherals for IoT applications.
- **Microchip PIC18F24Q10**: A 16-bit microcontroller with integrated USB and CAN interfaces, suitable for automotive and industrial applications.

2.1 MPU vs MCU

MPUs (Microprocessor Units) and MCUs (Microcontroller Units) are both types of integrated circuits used in computing, but they serve different purposes and have distinct characteristics.

MPU (Microprocessor Unit)

- Designed for general-purpose computing tasks.
- Typically requires external components such as memory and peripherals to function.
- Used in applications like personal computers, servers, and high-performance embedded systems.
- Examples include Intel x86 processors and ARM Cortex-A series.

MCU (Microcontroller Unit)

- Designed for specific control-oriented tasks.
- Integrates memory, peripherals, and processing capabilities on a single chip.
- Used in embedded systems, IoT devices, and applications requiring low power consumption.
- Examples include Arduino, Raspberry Pi Pico, and ESP8266/ESP32.

What about ARM? ARM isn't a company that produces microcontrollers, but rather a company that designs the architecture and licenses it to other manufacturers. Many microcontrollers, including those used in IoT devices, are based on ARM architecture. For example, the ARM Cortex-M series is widely used in microcontrollers for embedded applications. So while ARM itself doesn't produce microcontrollers, its architecture is fundamental to many of the MCUs available on the market. What is the difference between Power and Energy? Power is istantaneous, while energy is the total amount of work done over time, in fact we can calculate energy as: $E(t) = \int_{t_0}^{t} P(t)dt$. what is a duty cycle? Duty cycle is the percentage of time a system is active compared to the total time it could be active.

3 Actuation subsystem

The actuation is the process of converting electrical signals into physical actions. Actuators are devices that perform this conversion, and they can be classified into various types based on their operating principles and applications. Common types of actuators include:
Types of Actuators

- **Electric Actuators**: These actuators use electrical energy to produce motion. Examples include electric motors, solenoids, and piezoelectric actuators.
- **Hydraulic Actuators**: These actuators use fluid pressure to generate motion. They are commonly used in heavy machinery and industrial applications.
- **Pneumatic Actuators**: These actuators use compressed air to create motion. They are often used in automation and manufacturing processes.
- **Thermal Actuators**: These actuators rely on temperature changes to produce motion. They can be found in applications such as thermostats and thermal switches.
- **Magnetic Actuators**: These actuators use magnetic fields to generate motion. Examples include electromagnetic relays and magnetic levitation systems.

Actuators needs a lot: energy, voltage, current, protection, etc. There are two main categories of actuators:

- **Digital actuators**: ON/OFF control, GPIO (General Purpose Input/Output) like relays, solenoids, and stepper motors.
- **Analog actuators**: Continuous control, PWM (Pulse Width Modulation) and requires DAC (Digital to Analog Converter) for control.

3.1 Analog actuators

Analog actuators require a continuous range of control signals, which can be achieved through techniques like Pulse Width Modulation (PWM).

3.2 Digital actuators

Digital actuators operate in a binary manner, meaning they are either fully ON or fully OFF. They are typically controlled through General Purpose Input/Output (GPIO) pins on microcontrollers. Examples of digital actuators include relays, solenoids, and stepper motors. These actuators are often used in applications where simple ON/OFF control is sufficient, such as switching devices on and off or controlling the position of a mechanism in discrete steps.

3.3 DAC: Digital to Analog Converter

A Digital to Analog Converter (DAC) is an electronic device that converts digital signals, which are typically represented as binary numbers, into corresponding analog voltages or currents. DACs are essential in applications where digital systems need to interface with the analog world, such as in audio and video equipment, instrumentation, and control systems. The output of a DAC can be used to drive analog actuators, generate audio signals, or create reference voltages for other components in a system. The resolution of a DAC is determined by the number of bits it uses to

represent the digital input, with higher resolution providing finer control over the output signal.
Characteristics add them The conversion is quantized, meaning that the output can only take on discrete values based on the digital input.

To perform the conversion we can use the following formula:

$$V_{out} = \frac{D}{2^n - 1} \cdot V_{ref} \tag{1}$$

Where:

- V_{out} is the output voltage of the DAC.
- D is the digital input value (an integer between 0 and $2^n - 1$).
- n is the number of bits of resolution of the DAC.
- V_{ref} is the reference voltage for the DAC, which determines the maximum output voltage.

Some of the key characteristics of DACs include:

- **Resolution**: The number of bits used to represent the digital input, which determines the number of discrete output levels.
- **Sampling Rate**: The speed at which the DAC can convert digital signals to analog, typically measured in samples per second (SPS).
- **Linearity**: The degree to which the output voltage is directly proportional to the digital input, ideally resulting in a straight line when plotted. It can be measured in terms of Integral Non-Linearity (INL) and Differential Non-Linearity (DNL).
- **Settling Time**: The time it takes for the DAC output to stabilize within a certain error margin after a change in the digital input.
- **Power Consumption**: The amount of power required for the DAC to operate, which can be an important consideration in battery-powered applications.
- **Output Range**: The range of voltages that the DAC can produce, which is typically determined by the reference voltage and the resolution of the DAC. Usually bipolar or unipolar.

3.4 PWM: Pulse Width Modulation

Pulse Width Modulation (PWM) is a technique used to control the amount of power delivered to an electrical load by varying the width of the pulses in a pulse train. In PWM, the duty cycle of the signal is adjusted to control the average voltage or current supplied to the load. This method is commonly used in applications such as motor speed control, LED dimming, and power regulation. The duty cycle is defined as the percentage of time that the signal is active (ON) compared to the total period of the signal. By increasing or decreasing the duty cycle, you can effectively control the power delivered to the load without changing the frequency of the signal. For example, a duty cycle of 50% means that the signal is ON for half of the time and OFF for the other half, resulting in an average voltage that is half of the supply voltage. PWM is an efficient way to control power because it minimizes energy loss in the form of heat, making it ideal for applications where energy efficiency is important. The advantages of PWM include:

- **Energy Efficiency**: PWM allows for efficient power control by minimizing energy loss, as the switching devices are either fully ON or fully OFF.
- **Deterministic Timing**: The timing of the pulses can be precisely controlled, making it suitable for applications requiring precise timing control.
- **High frequency stabilty**: PWM can operate at high frequencies, which can help reduce noise and improve the performance of certain applications.

3.4.1 DAC vs PWM

While both DAC and PWM can be used to control analog actuators, the DAC prioritizes signal fidelity and low ripple, meanwhile the PWM prioritizes energy efficiency and simplicity. Choosing between DAC and PWM depends on the application requirements.

3.5 GPIO: General Purpose Input/Output

GPIO pins provide a programmable digital interface between the processor and external hardware. They are used to connect:

- custom digital sensors;
- digital actuators;
- other digital devices;
- control signals.

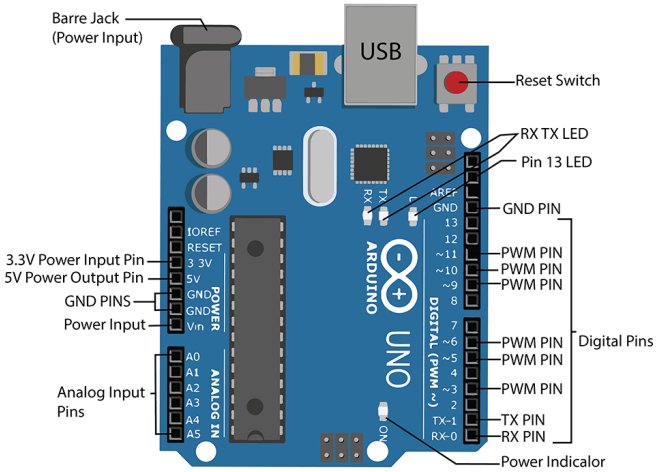

Figure 1: Structure of Arduino UNO

The output voltage of a GPIO pin depends on the specific microcontroller and its operating voltage. There are some electrical constrains:

- **Limited maximum current per pin**
- **Limited total current for all pins**
- **Voltage levels must be compatible with connected devices**
- **Use of current-limiting resistors to protect the microcontroller and connected components**

3.6 Relay

A relay is an electrically operated switch that allows a low-power signal to control a higher power circuit. It consists of an electromagnet, a set of contacts, and a spring mechanism. When the low-power signal energizes the electromagnet, it creates a magnetic field that pulls the contacts together, closing the circuit and allowing current to flow through the higher power circuit. Relays are commonly used in applications where it is necessary to control a high voltage or high current load with a low voltage signal, such as in automotive systems, industrial automation, and home appliances. They provide electrical isolation between the control circuit and the load, which can help protect sensitive components from damage.

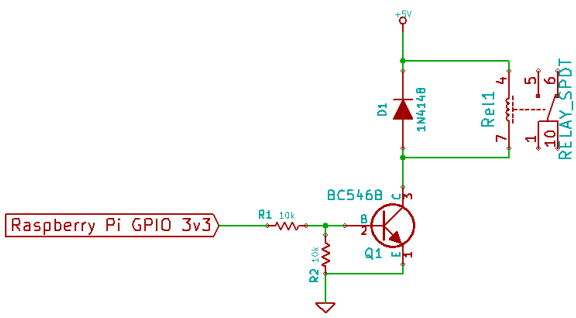

Figure 2: Structure of a relay

3.7 Filtering and protection

When controlling actuators, it is important to consider the need for filtering and protection circuits. Filtering is necessary to remove noise and unwanted signals that may interfere with the proper operation of the actuator. Protection circuits are used to prevent damage to the microcontroller or other components in case of overcurrent, overvoltage, or other abnormal conditions. These circuits can include diodes, capacitors, resistors, and other components that help ensure safe and reliable operation of the actuator system. Some solutions are:

- **Decoupling capacitors**: placed across the power supply lines to filter out noise and provide a stable voltage to the actuator.
- **RC/LC Low-pass Filters**:
- **Subnetworks**:

4 Energy and Power

4.1 Power vs Energy

Power and energy are related but distinct concepts in physics. Power is the rate at which energy is transferred or converted, while energy is the capacity to do work. Reducing power consumption doesn't necessarily reduce energy consumption, as it depends on the duration of the operation. The optimization of power isn't the same as the optimization of energy, and both are important considerations in the design of efficient systems. To minimize power consumption we use thermal constraints, while to minimize energy consumption we use battery constraints. In autonomous systems, energy consumption goes through a well-defined path:

- **Energy generation**
- **Energy storage**
- **Energy conversion**
- **Energy consumption**

So we understand that a System Designer is necessary to optimize the energy path.

4.2 Power Source

Energy harvesting is the process of capturing and converting ambient energy from the environment into usable electrical energy. There is a wide range of physical phenomena that can be harnessed for energy harvesting, including:

- **Piezoelectricity**
- **Thermoelectricity**
- **Electromagnetic induction**
- **Photovoltaic effect**
- **Triboelectricity**

There same issues that affect the design of energy harvesting systems include:

- **The maximum power extraction**: The maximum power that can be extracted from an energy harvesting source is often limited by the environmental conditions.
- **Extracted power is almost invariably very low**: The power generated by energy harvesting sources is typically very low, which can limit their applicability in certain applications.
- **Extracted power might not be needed immediatly**: To avoid this problem is needed to store the energy in a battery or supercapacitor, which can add complexity and cost to the system.

5 Interfaces

All the sensors and actuators are accessed through interfaces, which are the means by which a system communicates with the outside world.

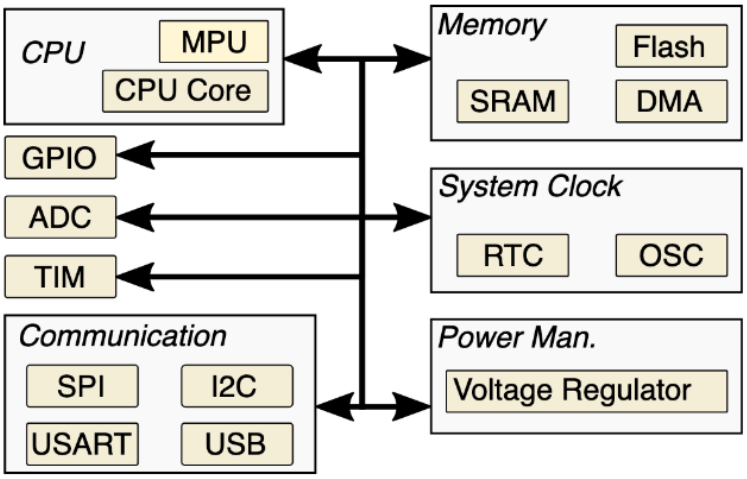

Interfaces are hardware block integrated on-chip that:

- expose configuration registers to the software;
- provide status registers to the software;
- provide data registers to the software;

They are not just I/O ports but also include **timers and counters**, **watchdogs** and **interrupt controllers**. A generic peripheral interface is composed of:
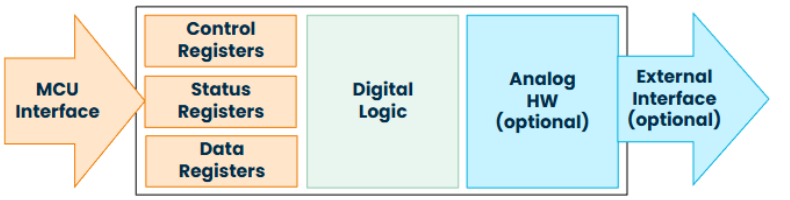
- **Control registers**: These registers are used to configure the behavior of the peripheral, such as setting the mode of operation, enabling or disabling certain features, and configuring the timing of the peripheral.
- **Status registers**: These registers provide information about the current state of the peripheral, such as whether it is busy or idle, whether there are any errors, and whether there are any pending interrupts.
- **Data registers**: These registers are used to read and write data to and from the peripheral. For example, in a sensor interface, the data registers would be used to read the sensor data, while in an actuator interface, the data registers would be used to write commands to the actuator.