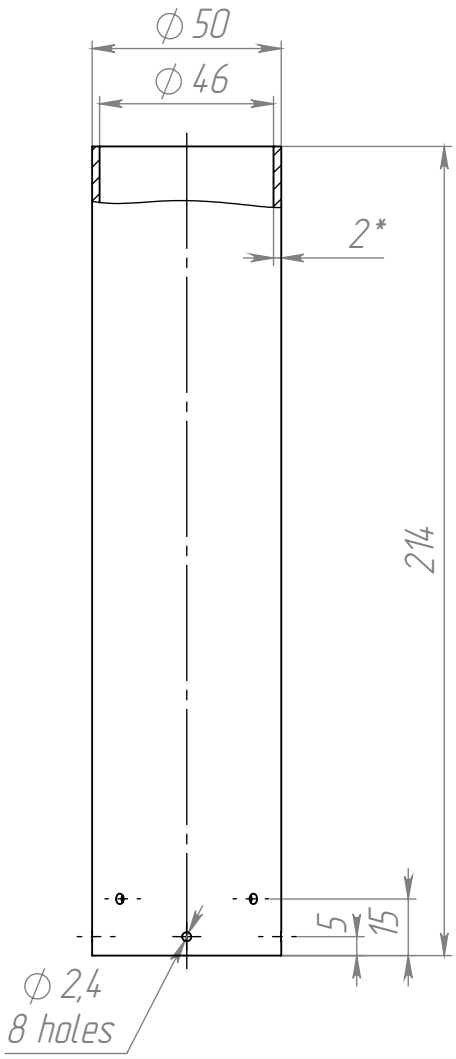

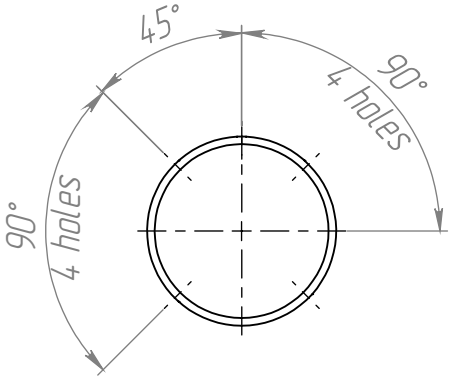

1.* Dimensions for reference
2. Unspecified tolerances H14, h14, ±IT14/2

					FW001.02		
Rev.	Sheet	Doc. No.	Signature	Date	Body upper	Letter	Weight	Scale
Dvlpd by		Hryshko					0,08	1:2
Chkd by		Ivannik				Sheet 1	Sheets 1	
Tech. Ctrl								
Reg. Ctrl						FireWay		
Aprvd by								

Primary Usage | Reference No. | Signa. and date | Copy inv. No. | Repl. inv. No. | Sign. and Date | Orig. Inv. No.

Copied by Size A4