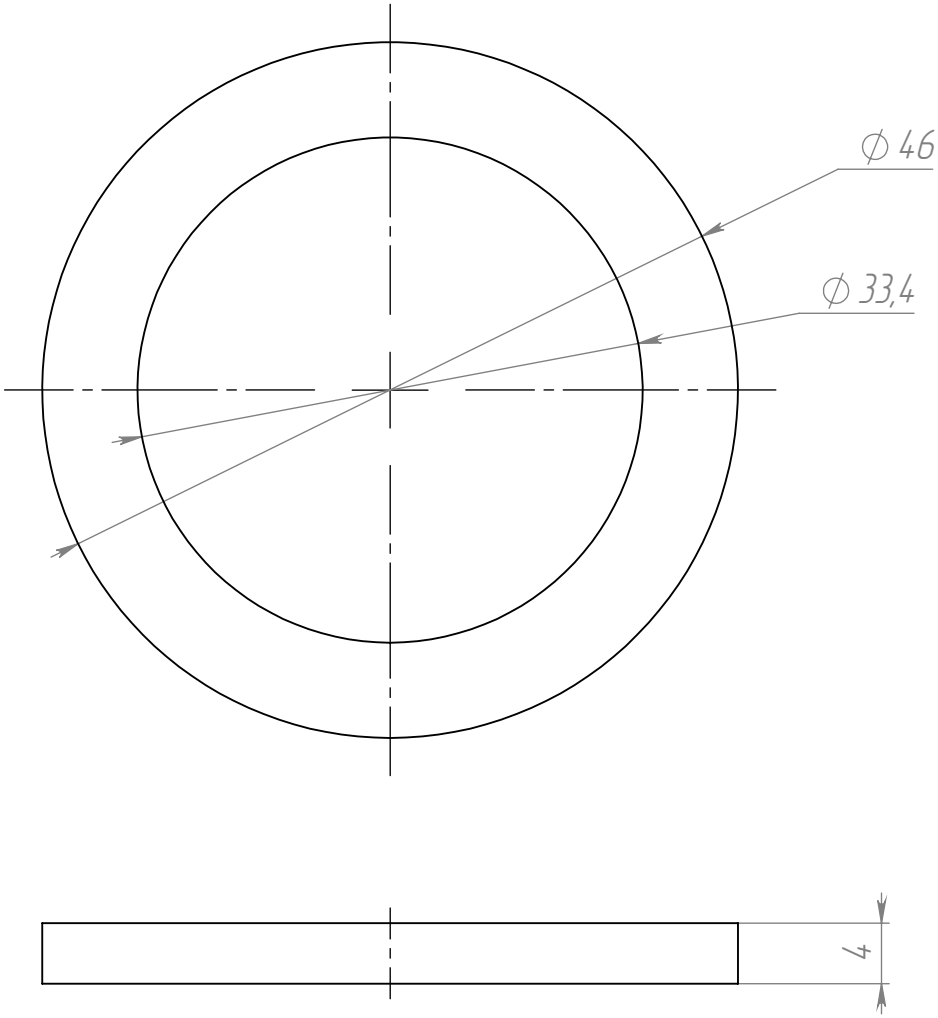

1. Unspecified tolerances H14, h14, ±IT14/2

					FW001.10		
Rev.	Sheet	Doc. No.	Signature	Date	Washer	Letter	Weight	Scale
Dvlpd by		Hryshko					0,00	2:1
Chkd by		Ivannik						
Tech. Ctrl						Sheet 1	Sheets 1
Reg. Ctrl					PLA GOST 2076-2015	FireWay	
Aprvd by							

Primary Usage | Reference No. | Signa. and date | Copy inv. No. | Repl. inv. No. | Sign. and Date | Orig. Inv. No.

Copied by | Size A4