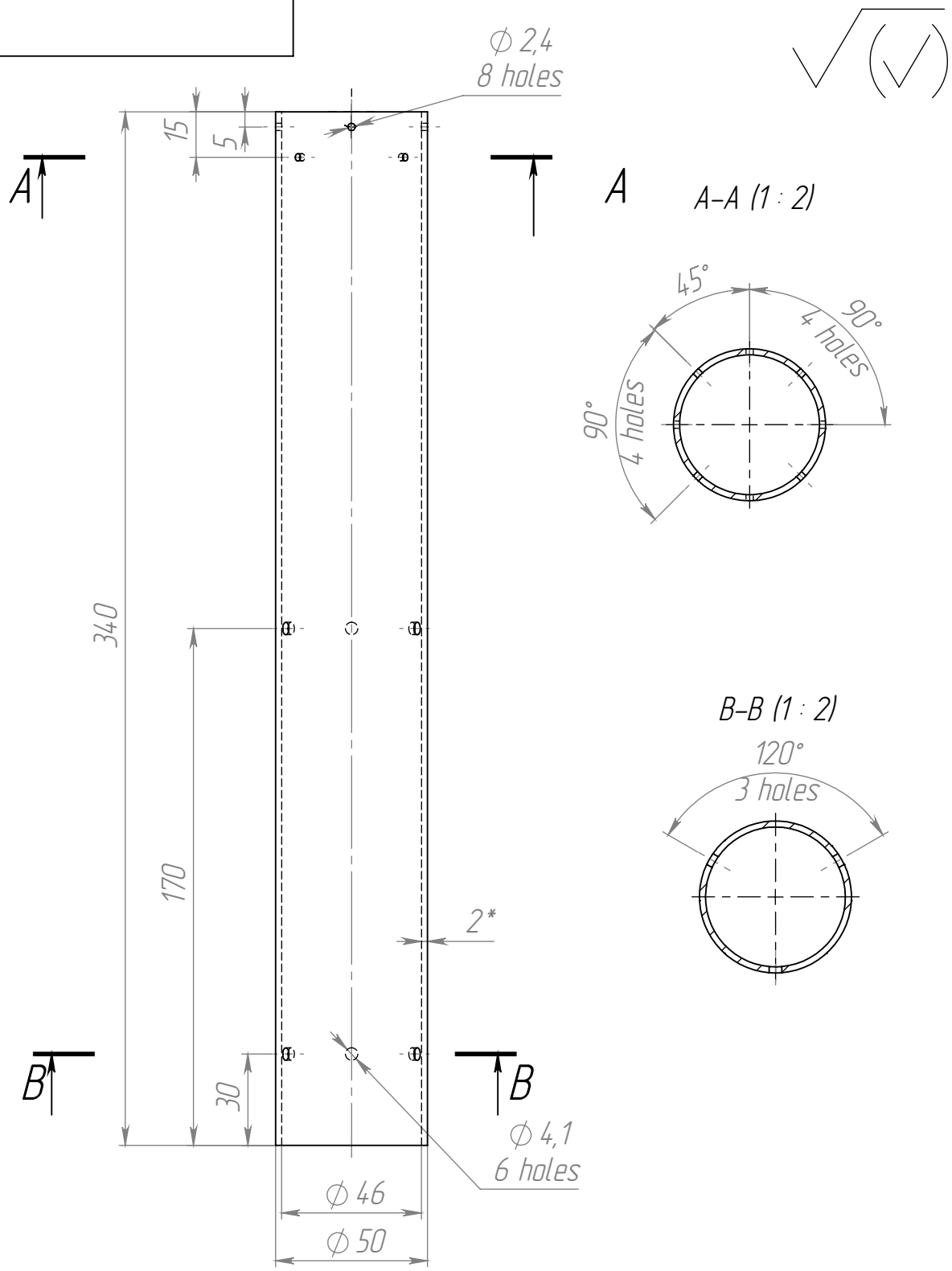

1.* Dimensions for reference
2. Unspecified tolerances H14, h14, ±IT14/2

Rev.	Sheet	Doc. No.	Signature	Date
Dvlpd by		Hryshko		
Chkd by		Ivannik		
Tech. Ctrl				
Reg. Ctrl				
Aprvd by				

FW001.04

Body lower

Letter	Weight	Scale
	0,13	1:5

Sheet 1 Sheets 1

FireWay

Primary Usage | Reference No. | Signa. and date | Copy inv. No. | Repl. inv. No. | Sign. and Date | Orig. Inv. No.

Copied by Size A4