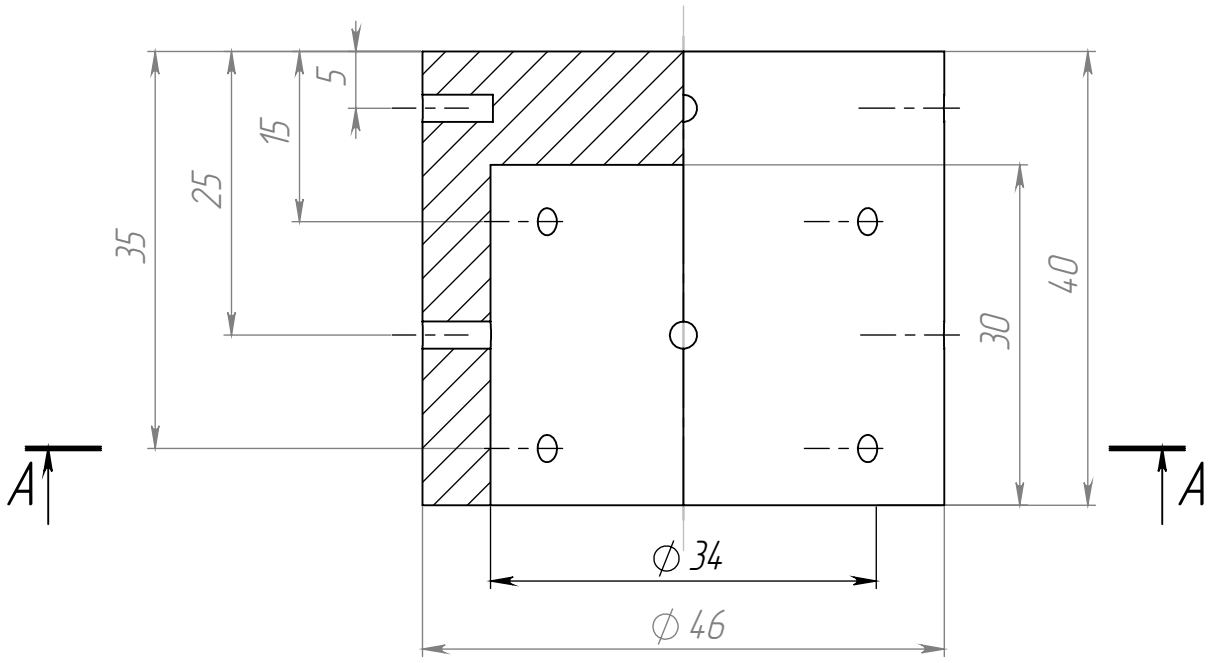

A–A

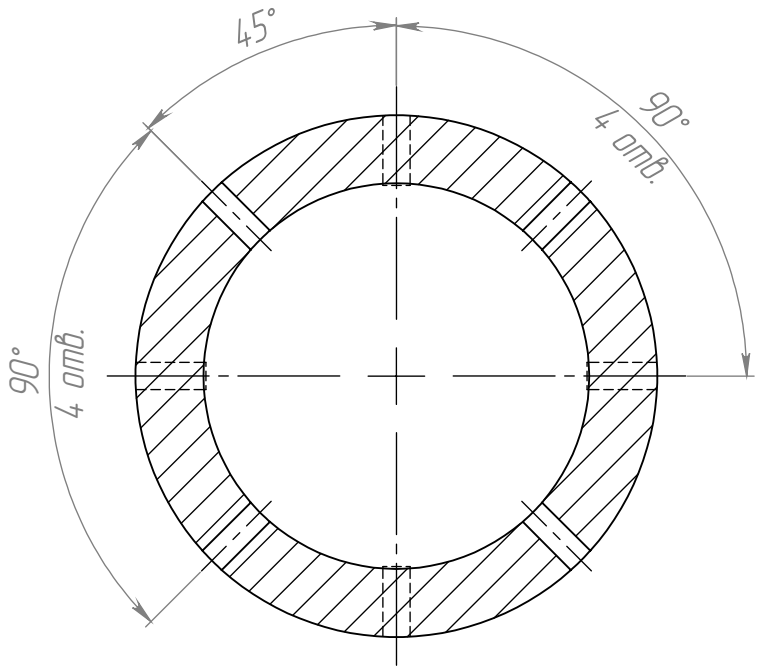

1. Unspecified tolerances H14, h14, ±IT14/2

					FW001.07		
Rev.	Sheet	Doc. No.	Signature	Date	Adapter middle/lower	Letter	Weight	Scale
							0,05	1.5:1
Dvlpd by		Hryshko				Sheet 1	Sheets 1	
Chkd by		Ivannik						
Tech. Ctrl								
Reg. Ctrl					PLA GOST 2076–2015	FireWay		
Aprvd by								

Primary Usage | Reference No. | Signa. and date | Copy inv. No. | Repl. inv. No. | Sign. and Date | Orig. Inv. No.

Copied by | Size A4