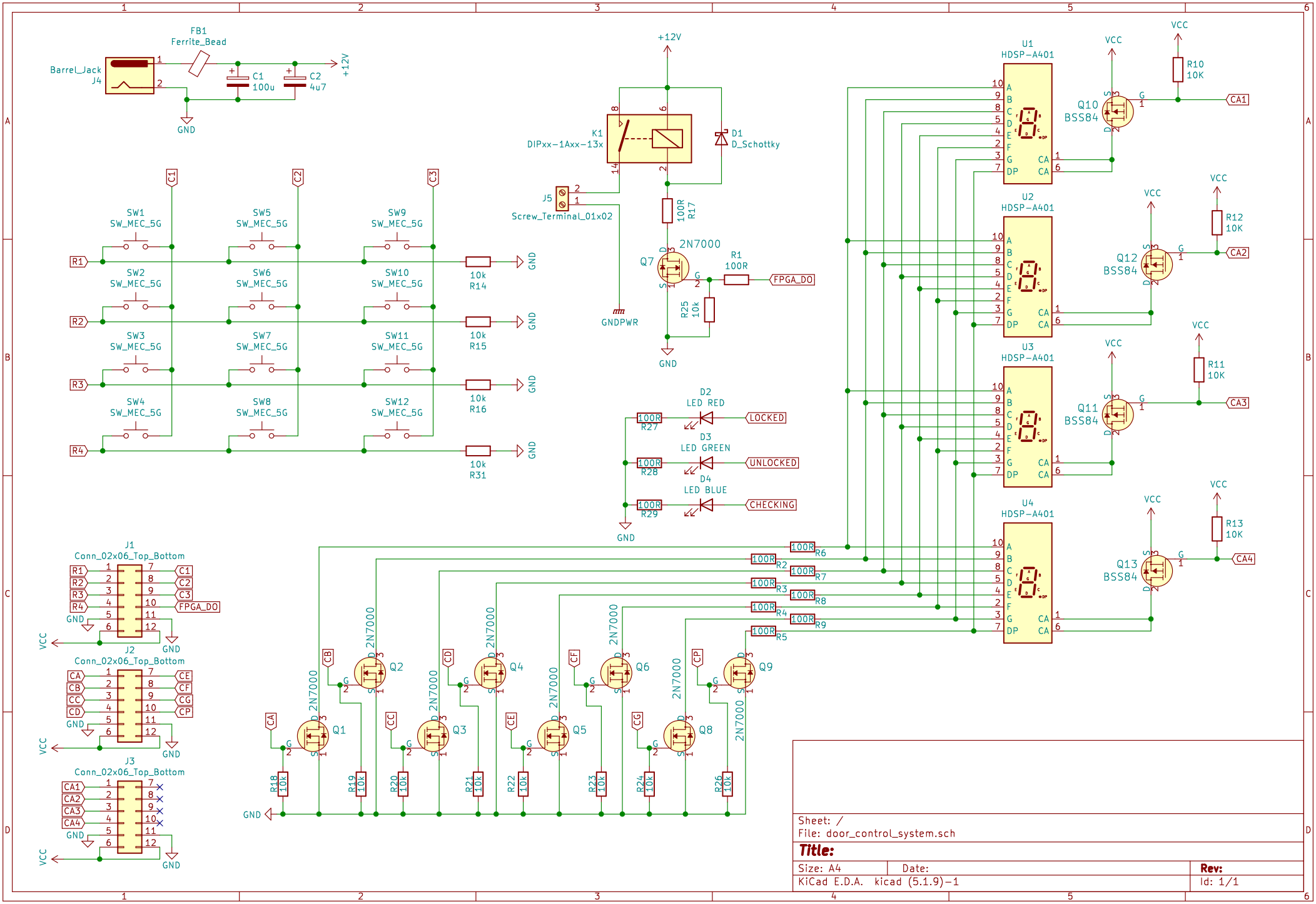
FB1
Ferrite_Bead
Barrel_Jack
J4
C1
100u
C2
4u7
+12V
GND
K1
DIPxx-1Axx-13x
D1
D_Schottky
J5
Screw_Terminal_01x02
100R
R17
2N7000
Q7
R1
100R
FPGA_DO
R25
10k
GNDPWR
SW1
SW_MEC_5G
SW2
SW_MEC_5G
SW3
SW_MEC_5G
SW4
SW_MEC_5G
SW5
SW_MEC_5G
SW6
SW_MEC_5G
SW7
SW_MEC_5G
SW8
SW_MEC_5G
SW9
SW_MEC_5G
SW10
SW_MEC_5G
SW11
SW_MEC_5G
SW12
SW_MEC_5G
R1
R2
R3
R4
C1
C2
C3
10k
R14
10k
R15
10k
R16
10k
R31
D2
LED RED
D3
LED GREEN
D4
LED BLUE
100R
R27
100R
R28
100R
R29
LOCKED
UNLOCKED
CHECKING
U1
HDSP-A401
U2
HDSP-A401
U3
HDSP-A401
U4
HDSP-A401
VCC
Q10
BSS84
Q11
BSS84
Q12
BSS84
Q13
BSS84
R10
10K
R11
10K
R12
10K
R13
10K
CA1
CA2
CA3
CA4
J1
Conn_02x06_Top_Bottom
J2
Conn_02x06_Top_Bottom
J3
Conn_02x06_Top_Bottom
FPGA_DO
CA
CB
CC
CD
CE
CF
CG
CP
Q1
Q2
Q3
Q4
Q5
Q6
Q8
Q9
R18
10k
R19
10k
R20
10k
R21
10k
R22
10k
R23
10k
R24
10k
R26
10k
R5
R6
R7
R8
R9
Sheet: /
File: door_control_system.sch
Title:
Size: A4
Date:
Rev:
KiCad E.D.A. kicad (5.1.9)-1
Id: 1/1