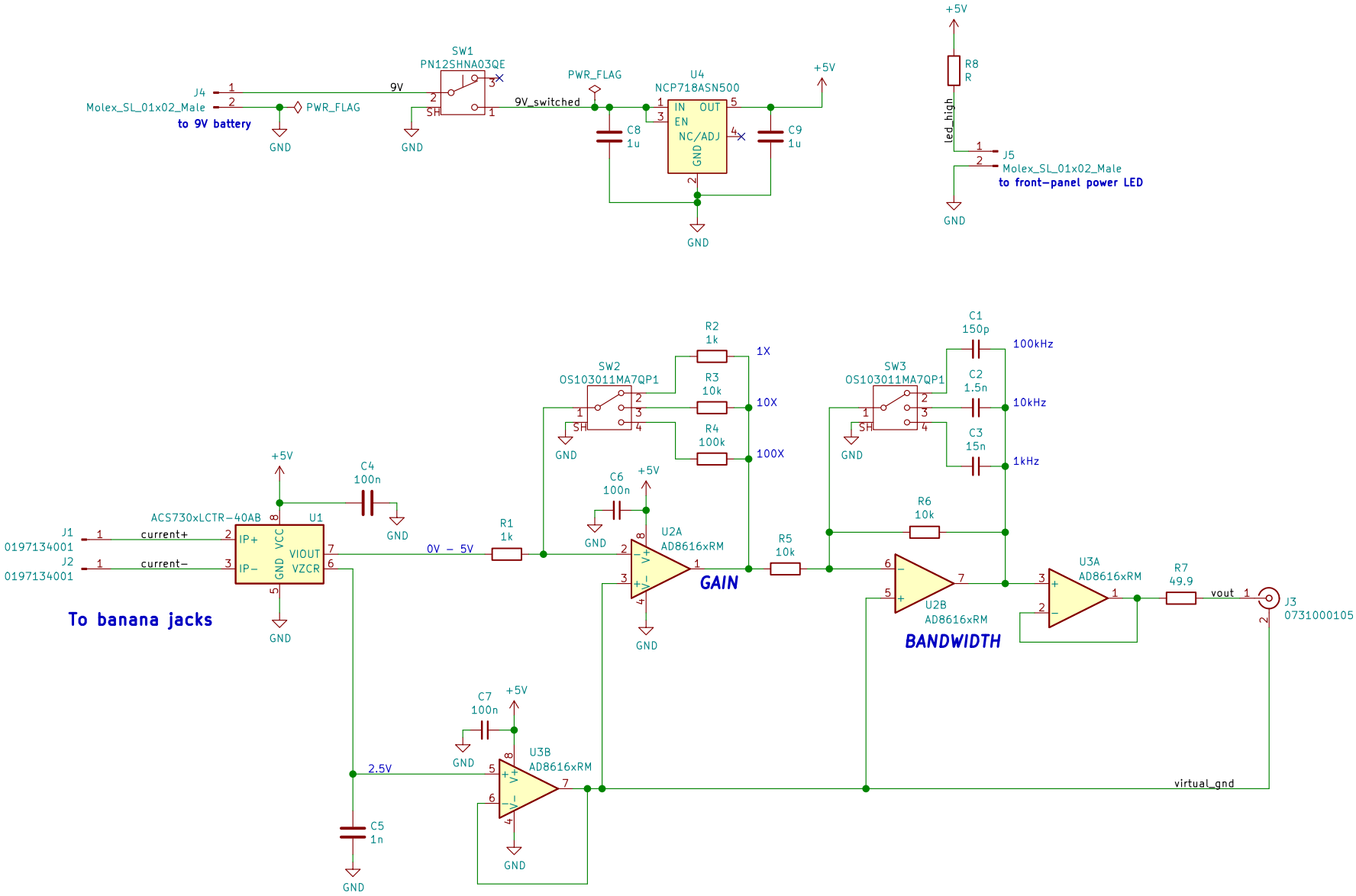

https://creativecommons.org/licenses/by-sa/4.0/

Made With KiCad

G. Keeth

Sheet: /

File: current-sensor.sch

Title: Current Sensor

Size: A	Date: 2020-08-24	Rev: 0
KiCad E.D.A. kicad (5.1.6-83-g18490162f)		Id: 1/1