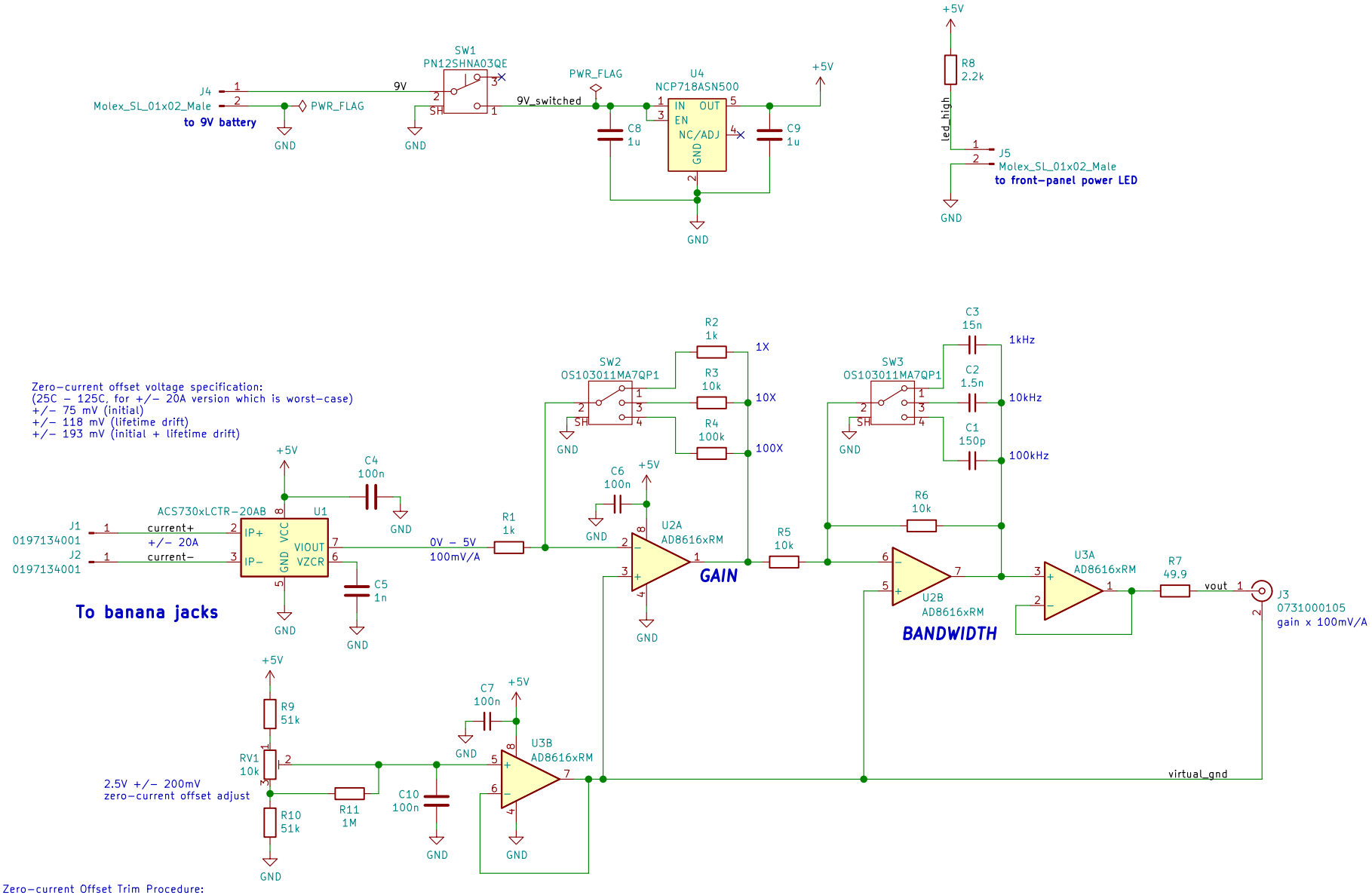

https://creativecommons.org/licenses/by-sa/4.0/

Made With KiCad

G. Keeth

Sheet: /
File: current-sensor.sch

Title: Current Sensor

Size: A	Date: 2021-08-22	Rev: 2
KiCad E.D.A. kicad 5.1.10		Id: 1/1