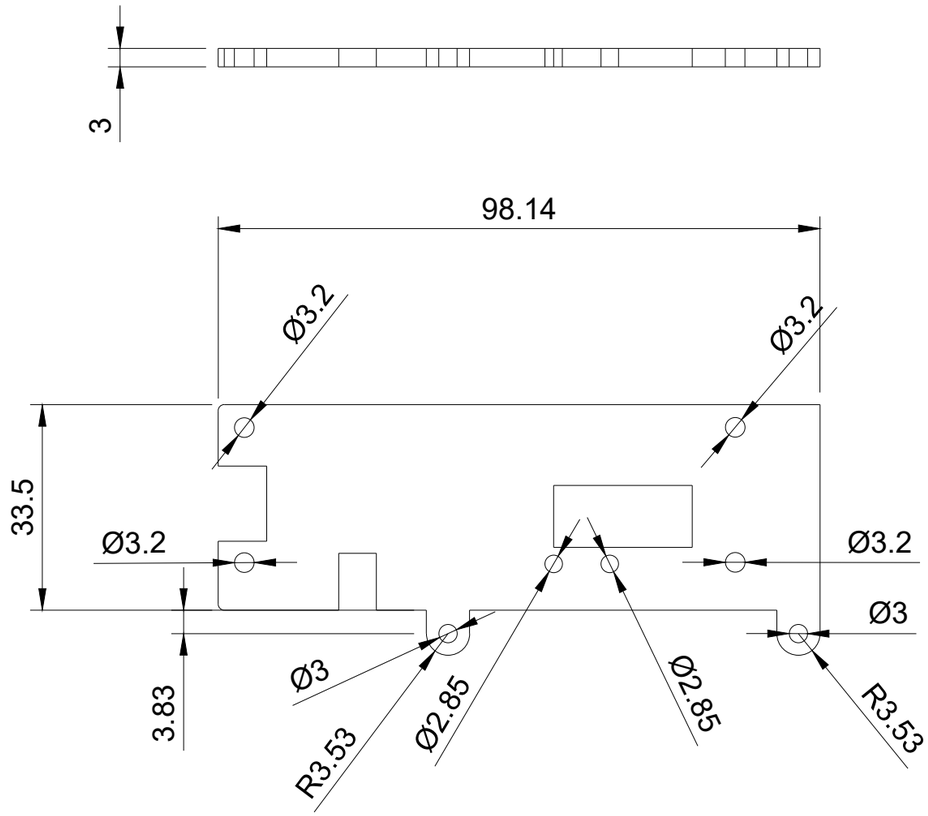

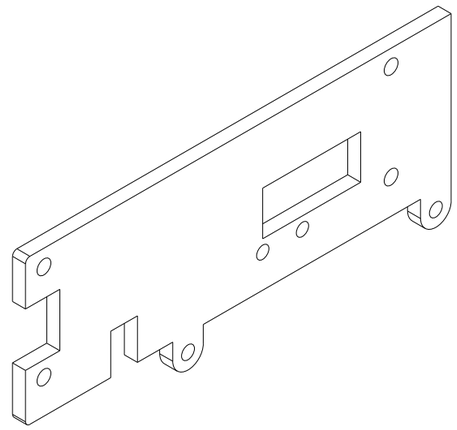

Dept.	Technical reference	Created by Maethee Chongchitnant 2/22/2020	Approved by	
Unit: mm		Document type	Document status	
		Title MC-76K-Controller-Holder	DWG No.	
			Rev. / Date of issue	Sheet 1/1