Towards “Monotype Compositions”

Scanning device and software to decode data from a Monotype System tape

Graham Klyne (gk@ninebynine.org) and Dawn Cole (dawn.m.cole@btinternet.com)

Part of an art and technology collaboration exploring written text through diverse media, including printed text and sound, starting from a historical diary that has been typeset using the Monotype System. Here we outline a prototype scanning device and software, created to capture electronic data from a Monotype Tape. This entails interfacing between historical mechanical technology and modern electronic digital systems, and information transfers between physical and virtual realms.

Monotype Compositions

Monotype Compositions is a project involving the diary of WW1 nurse Clarice Spratling, historical print technology, and data sonification.

Conceived by artist and printmaker Dawn Cole [1], who wrote: "I had begun [...] to wonder if I could somehow ‘play’ the monotype spool in a specially designed music box. What would the sound of Clarice’s diary be like played in this way? Would it bear any resemblance to word sounds when read aloud or have a pattern that would reference the lace patterns I had created using the written words?" [2].

We have made a 3D-printed device to record a digital video of the Monotype tape, and Python software using OpenCV [3] to extract typesetting data from the video. Using ideas from Prof. David De Roure's *Numbers into Notes* [4], we will explore ways in which the data can be presented sonically through translation to MIDI, in turn to inform a design for Dawn's "specially designed music box".

The Monotype System

Patented in 1887, the pneumatically operated Monotype System [5] casts hot-metal justified type from text and typesetting information entered through a keyboard. It uses a 31-channel paper tape to transfer information from the keyboard to the caster.

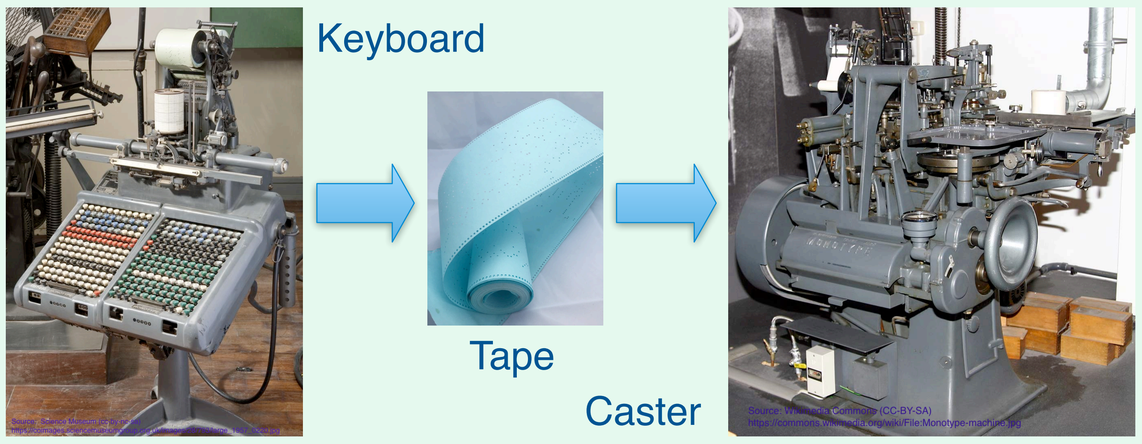

Scanning the Tape

A 3D-printed scanner device records a video of the Monotype Tape drawn over a narrow light source.

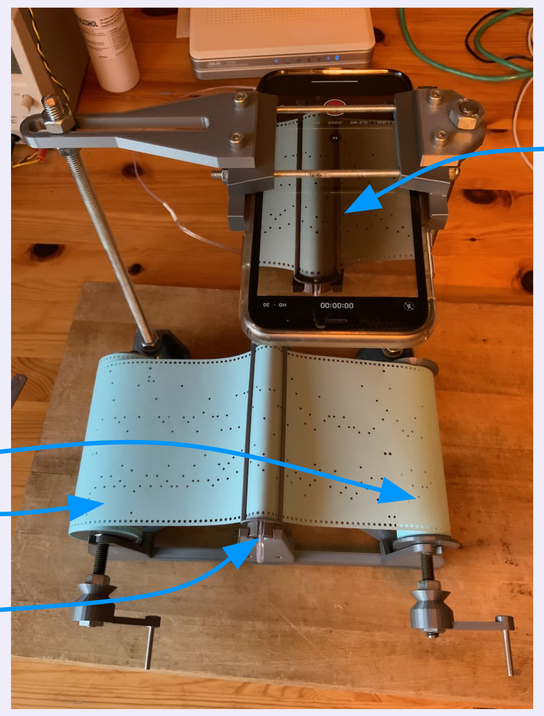

Scanner parts have been designed using OpenSCAD [6], and fabricated using a Prusa 3D printer.

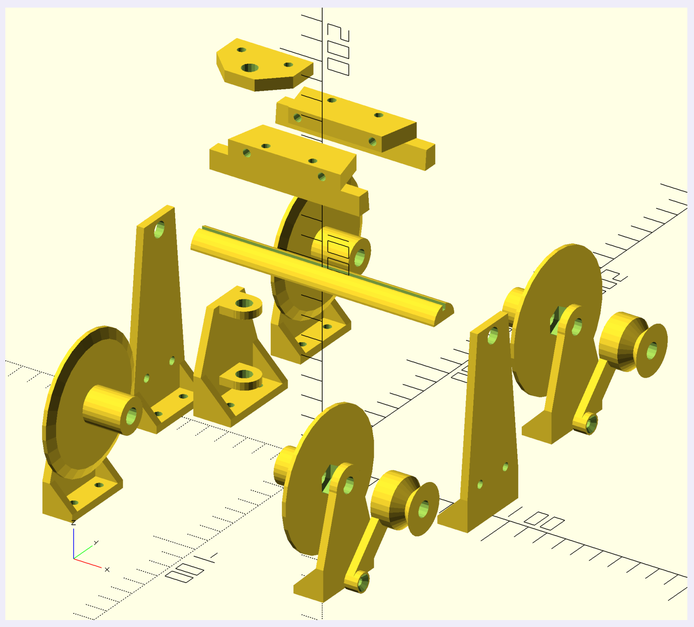

https://github.com/gklyne/monotype_tape_reader

Decoding the Video - Processing Pipeline

https://github.com/gklyne/opencv-video-data-extraction

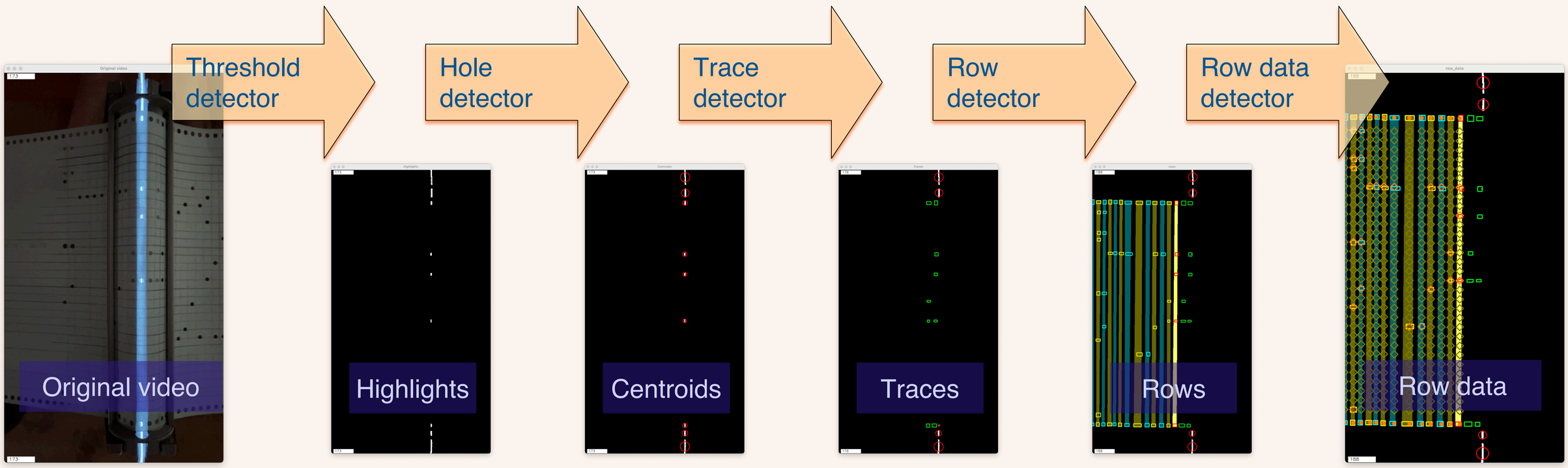

Pixels above or below a brightness threshold are interpreted as "on" or "off"

Find centroids of adjacent "on" pixels, to represent the positions of holes in the tape

Detect holes appearing in successive video frames as they are illuminated

Using position and frame (temporal) data, detect straight rows of holes, allowing for skew

Positions of detected holes determine which channels have been selected

References

[1] https://www.dawncole.co.uk/
[2] https://embroiderthetruth.wordpress.com/2020/06/12/monoprint-compositions/
[3] https://opencv.org/about
[4] http://www.semanticaudio.ac.uk/demonstrators/18-ada-lovelace-numbers-into-notes/
[5] https://en.wikipedia.org/wiki/Monotype_system
[6] https://openscad.org/