SCHOOL OF COMPUTATION, INFORMATION AND TECHNOLOGY - INFORMATICS

TECHNISCHE UNIVERSITÄT MÜNCHEN

Master's Thesis in Informatics

Vision-Language Foundation Models for Multi-Modal Medical Data

Muhammed Göktepe

SCHOOL OF COMPUTATION, INFORMATION AND TECHNOLOGY - INFORMATICS

TECHNISCHE UNIVERSITÄT MÜNCHEN

Master's Thesis in Informatics

Vision-Language Foundation Models for Multi-Modal Medical Data

Vision-Language-Foundation-Modelle für Multimodale Medizinische Daten

Author:	Muhammed Göktepe
Examiner:	Prof. Dr. Christian Wachinger
Supervisor:	Fabian Bongratz

Submission Date:	16.03.2026
Keywords:	3D CT; Radiology Report Generation; Vision-Language Models; Organ-aware Attention; MedGemma; Parameter-Efficient Fine-Tuning

I confirm that this master's thesis is my own work and I have documented all sources and material used.

Munich, 16.03.2026 Muhammed Göktepe

Acknowledgments

Abstract

This thesis investigates organ-aware radiology report generation from 3D chest CT using vision-language foundation models. The main challenge is to preserve clinically relevant anatomical information while keeping the visual token interface compact and stable for language decoding.

We propose an end-to-end pipeline that combines volumetric CT preprocessing with organ-mask supervision, LLM-based decomposition of reports into organ-level targets, organ-conditioned visual token extraction from a 3D vision encoder, and decoder adaptation with parameter-efficient fine-tuning. The framework is designed for protocol-matched comparison across MedGemma, GPT-2, BioBART, and a fVLM-aligned BERT-base baseline.

Experiments on CT-RATE show that interface design has higher impact than architectural complexity. In controlled ablations, the strongest MedGemma variant improves major global quality and clinical-consistency signals over the baseline. In decoder-family comparison under the same evaluation protocol, the finalized rows show a mixed ranking: the fVLM-aligned BERT-base baseline is strongest on overall GREEN and broad lexical-semantic quality, while MedGemma remains strongest on relational clinical structure by RadGraph. Additional diversity diagnostics show higher template reuse in BERT outputs, whereas MedGemma outputs are less repetitive. GPT-2 ranks above BioBART on most global dimensions.

Overall, the thesis provides a reproducible organ-aware 3D report generation framework, code-grounded ablation evidence, and a complete protocol-matched cross-decoder comparison.

Contents

Acknowledgments **iv**

Abstract **v**

1. Introduction **1**
1.1. Problem Statement 1
1.2. Thesis Formulation 2
1.3. Contributions 2
1.4. Thesis Outline 3

2. Related Work **4**
2.1. Vision Transformers 4
2.1.1. Architectural Evolutions: Hierarchical and Self-Supervised ViTs 4
2.1.2. Adaptation to 3D Medical Volumes 5
2.2. Vision–Language Models 5
2.2.1. Contrastive Alignment and the CLIP Paradigm 5
2.2.2. Generative VLMs and Open-Weight Ecosystems 6
2.2.3. Medical Vision-Language Models 7
2.3. Decoders and Parameter-Efficient Fine-Tuning 7
2.3.1. Encoder-Decoder Architectures vs. Causal Modeling 8
2.3.2. Parameter-Efficient Fine-Tuning (PEFT) 9
2.4. Radiology Report Generation 9
2.4.1. Traditional and Early Transformer Approaches 10
2.4.2. The Evaluation Paradigm: From N-Grams to Clinical Efficacy . . 10
2.4.3. 2D Radiology Foundation Models 10
2.4.4. 3D Volumetric Report Generation 11
2.5. 3D Medical Image Segmentation and Organ-Guided Attention 12
2.5.1. Volumetric Segmentation Frameworks 12
2.5.2. Organ-Guided Attention and Clinical Grounding 13

3. Methodology **14**
3.1. Pipeline Overview 14

3.2. Data and Targets . . . 14
3.2.1. Volume and Mask Preprocessing . . . 14
3.2.2. Target Organ Set and Segmentation Mapping . . . 15
3.2.3. Report Decomposition Targets . . . 15
3.2.4. Organ Visibility and Report Presence Distribution . . . 16
3.3. Model Architecture . . . 17
3.3.1. 3D Visual Backbone . . . 17
3.3.2. Organ Queries and Masked Cross-Attention . . . 19
3.3.3. Token Granularity and Empty-Organ Safety . . . 19
3.3.4. Projection, Stabilization, and Sentinel Wrapping . . . 19
3.4. Variants Evaluated . . . 20
3.4.1. Controlled Comparison Groups . . . 21
3.5. Decoder Adaptation and Training Objective . . . 21
3.5.1. Decoder-Specific Adaptation . . . 21
3.5.2. Weighted Language Modeling Loss . . . 22
3.5.3. Optional Alignment Objective . . . 22
3.6. Optimization and Inference . . . 22
3.6.1. Shared Optimization Settings . . . 22
3.6.2. Training-Strategy Variants . . . 22
3.6.3. Organ-Wise Inference and Report Assembly . . . 23
3.7. Reproducibility Notes . . . 23

4. Experiments and Results **24**
4.1. Experimental Setup . . . 24
4.1.1. Objectives and Research Questions . . . 24
4.1.2. Dataset and Preprocessing . . . 24
4.1.3. Organ Coverage Profile . . . 25
4.1.4. Implementation and Optimization Defaults . . . 25
4.1.5. Ablation Axes . . . 25
4.2. Evaluation Protocol . . . 25
4.2.1. Metric Families . . . 25
4.2.2. Metric Interpretation Policy . . . 27
4.2.3. Evaluation Reproducibility and Result Provenance . . . 27
4.2.4. Qualitative Protocol for Attention Maps . . . 27
4.3. Results by Research Question . . . 28
4.3.1. Main MedGemma Result Tables . . . 28
4.3.2. RQ1: Token Interface Design . . . 28
4.3.3. RQ2: Architecture Complexity . . . 29
4.3.4. RQ3: Training Strategy . . . 29

4.3.5. Text Policy Check: Default vs Synonym Templates 30
4.3.6. RQ4: Decoder Family Comparison 30
4.4. Fine-Grained Analyses 31
4.4.1. Organ-Level Analysis 31
4.4.2. Cross-Attention Activation Case Studies 32
4.4.3. fVLM-Aligned Baseline on CT-RATE 33
4.5. Chapter Summary and Minimal Limitations Note 33

5. Discussion **35**
5.1. Why Interface Design Dominated 35
5.2. Metric Disagreement and Interpretation 36
5.3. Generalization and Organ Coverage 36
5.4. Decoder Family Axis 36
5.5. Relation to Prior Paradigms 37
5.6. Validity and Limits 37
5.7. Practical Implications and Synthesis 37

6. Conclusion and Future Work **39**
6.1. Conclusion 39
6.2. Take-Home Messages 40
6.3. Future Work 40
6.3.1. Track 1: Strengthen the Current Thesis Axis 40
6.3.2. Track 2: Improve Model Robustness and Efficiency 41
6.3.3. Track 3: Strengthen Clinical Validity 41
6.4. Final Remark 41

A. Metric Equations **42**
A.1. BLEU 42
A.2. ROUGE-L 42
A.3. METEOR 42
A.4. CIDEr 43

B. Model Variant Name Mapping **44**
B.1. Main Retraining Set 44
B.2. Text-Policy Set (Legacy) 44
B.3. Legacy Aliases and Implementation-Only Variant 44

Abbreviations **46**

List of Figures **47**

List of Tables **48**

Bibliography **49**

1. Introduction

Deep learning has become an important tool across science and engineering, with one of its strongest impacts in computer vision. Today, models perform very well on tasks such as image classification, object detection, and segmentation. These results, however, usually depend on large labeled datasets. In medical imaging, building such datasets is difficult because patient data must be handled carefully and expert annotation is costly and time-consuming.

Within medical imaging, radiology report generation is a high-impact task because reports are the main communication channel between image analysis and clinical decision-making. A useful model must do more than produce fluent text. It must describe findings accurately, preserve anatomical context, and avoid clinically misleading statements. This makes the problem closer to structured clinical reasoning than to generic image captioning.

1.1. Problem Statement

Traditional NLP-based frameworks for radiology report generation often suffered from a lack of localized visual reasoning and a weak integration of clinical knowledge. While early 2D Vision-Language Models (VLMs) leveraging attention mechanisms improved the alignment between image regions and text tokens, they fundamentally failed to capture true three-dimensional anatomical context. In clinical practice, critical findings such as lesion shape, spatial extent, and inter-slice continuity depend entirely on volumetric data.

Applying modern VLM architectures directly to 3D medical volumes, like CT scans, introduces substantial computational bottlenecks. The cubic growth of 3D attention mechanisms requires bridging architectures, such as perceptual resamplers or Q-Formers, to compress thousands of spatial tokens into a dense semantic representation without overwhelming the language decoder. Furthermore, while the field of generative AI has seen an expansion of capable multi-billion parameter foundation models, it remains an open question whether accurate medical report generation depends primarily on the 3D vision encoder or on the semantic reasoning capacity of the Large Language Model decoder.

1.2. Thesis Formulation

This thesis builds on fVLM [1] and focuses on radiology report generation from 3D chest CT. Rather than introducing a new vision backbone, we reuse the pretrained fVLM vision encoder and study how to turn its visual features into clinically reasonable reports.

Our main objective is to improve report quality through design choices around this encoder. Since fVLM does not release report-generation weights and reports limited decoder details, we implement a BERT-base branch [2] with language modeling loss on CT-RATE as a reproducible internal reference aligned with the paper description. We then evaluate additional generation strategies, including organ-conditioned token interfaces and decoder adaptation. Experiments are conducted on the CT-RATE dataset [3], a large-scale public dataset pairing 3D chest CT volumes with free-text radiology reports.

Instead of relying only on text-overlap metrics such as BLEU [4] and ROUGE [5], we also evaluate clinical quality using RadGraph [6] and GREEN [7], the Generative Radiology Report Evaluation and Error Notation metric. This helps us judge whether the generated reports are clinically useful, not only lexically similar.

Through ablations across decoder architectures, including MedGemma [8], BERT-base [2], GPT-2 [9], and BioBART [10], we analyze which decoder choices and interface designs best convert pretrained 3D visual representations into structured clinical text.

1.3. Contributions

The main contributions of this thesis are as follows:

1. **fVLM-Based Report Generation Framework**: We build an end-to-end CT report generation pipeline around a pretrained fVLM vision encoder, with a shared organ-aware visual frontend, decoder-side adaptation, and a reproducible BERT-base reference branch.

2. **Systematic Quality-Improvement Study**: We evaluate practical strategies to improve report generation quality, including organ-conditioned token interfaces, decoder choices such as MedGemma, BERT-base, GPT-2, and BioBART, and training ablations under a controlled setup.

3. **Clinical Efficacy Prioritization**: We validate generated results strictly against clinical-factuality metrics such as GREEN, RadGraph to distinguish genuine clinical correctness from superficial overlap-based gains driven by memorized reporting patterns.

1.4. Thesis Outline

The remainder of this thesis is organized as follows. Chapter 2 reviews relevant literature and motivates the design choices used in this work. Chapter 3 describes the end-to-end pipeline and training setup. Chapter 4 presents the experimental results, Chapter 5 analyzes their implications and limitations, and Chapter 6 summarizes the main outcomes and future directions.

2. Related Work

Building on the problem framing in Chapter 1, this chapter reviews prior work that directly motivates our design choices for 3D chest CT report generation. The discussion follows the same technical axis used in this thesis: visual encoding for volumetric data, vision–language modeling, decoder adaptation, report generation and evaluation, and organ-guided anatomical grounding.

2.1. Vision Transformers

The Vision Transformer (ViT) [11] introduced a transformer-first approach to image analysis. It splits an image into fixed-size non-overlapping patches, projects each patch into an embedding, and processes the resulting token sequence with a standard transformer encoder. In contrast to CNNs, ViT does not rely on hard-coded convolutional priors such as local receptive fields or translation invariance. Instead, spatial relations are learned through self-attention. With sufficient large-scale pretraining, this formulation achieved competitive or better performance than strong CNN baselines on standard vision benchmarks.

2.1.1. Architectural Evolutions: Hierarchical and Self-Supervised ViTs

After ViT, transformer variants sought to address its limitations for dense vision tasks and training efficiency. The Swin Transformer [12] introduced hierarchical feature maps and window-based self-attention, with shifted windows across layers to exchange information between local regions. This design lowered computational cost while preserving strong representational capacity. As a result, transformer backbones became more practical for detection and segmentation tasks, which are important in medical imaging.

In parallel, self-supervised learning reduced dependence on expensive annotations. Masked Autoencoders (MAE) [13] use an asymmetric encoder-decoder setup: the encoder processes only visible patches, while a lightweight decoder reconstructs masked content, often with masking ratios around 75%. This strategy learns strong visual representations directly from unlabeled images. DINOv2 [14] further showed that

self-distillation without labels can produce robust and transferable features across many downstream tasks.

2.1.2. Adaptation to 3D Medical Volumes

In medical imaging, transformers are attractive because they capture long-range spatial dependencies that are difficult to model with purely local operators. Early hybrid designs such as TransUNet [15] combined CNN-based local feature extraction with transformer-based global context modeling for 2D segmentation.

Clinical modalities such as CT and MRI are inherently volumetric. Slice-by-slice processing can miss through-plane continuity and weak cross-slice patterns. UNETR [16] addressed this limitation by tokenizing 3D patches and encoding the full volume with a ViT backbone.

The main limitation of direct 3D transformer modeling is computational cost. Attention complexity grows quadratically with token count, while token count in volumetric inputs grows rapidly with spatial resolution. For high-resolution CT, full global self-attention can exceed practical GPU memory budgets. Recent 3D transformer variants address this with windowed or sparse attention, hierarchical processing, and early spatial downsampling to keep training and inference feasible.

2.2. Vision–Language Models

Vision–language models (VLMs) aim to connect visual perception and natural language understanding. These models learn joint representations of images and text, enabling cross-modal tasks such as image captioning, visual question answering (VQA), and multimodal reasoning.

2.2.1. Contrastive Alignment and the CLIP Paradigm

CLIP (Contrastive Language–Image Pre-training) [17] introduced a scalable approach to learning visual representations from natural language supervision. By training independent vision and text encoders to maximize the cosine similarity of matching image–text pairs in a shared embedding space while minimizing the similarity of non-matching pairs, CLIP learns transferable visual concepts. Trained on 400 million image–text pairs curated from the internet, CLIP showed strong zero-shot transfer capability across many downstream visual tasks.

Recent advances refined the CLIP objective. SigLIP (Sigmoid Loss for Language Image Pre-Training) [18] replaces the standard softmax-based contrastive loss with a pairwise sigmoid loss. This change removes the need for global views of all negative

pairs across devices, improves training efficiency and scalability, and can improve representation quality. The contrastive learning paradigm established by CLIP and extended by SigLIP remains a common foundation for aligning vision and language modalities in modern VLMs.

2.2.2. Generative VLMs and Open-Weight Ecosystems

While contrastive models focus on alignment and retrieval, generative VLMs produce natural language outputs explicitly conditioned on visual inputs. BLIP (Bootstrapping Language-Image Pre-training) [19] proposed a unified framework that jointly trains a contrastive alignment objective, an image–text matching classification objective, and a generative language modeling objective. This multi-task design made BLIP effective for both image understanding and text generation.

Building upon this, BLIP-2 [20] introduced a compute-efficient strategy for bridging the modality gap: the Q-Former (Query Transformer). The Q-Former acts as an interface between a frozen image encoder and a frozen large language model. It uses learnable query vectors that cross-attend to dense visual features and extract text-relevant information. In this way, the Q-Former compresses thousands of spatial visual tokens into a fixed, small number of latent tokens; a common setting uses 32 tokens. These compressed tokens are then projected into the text embedding space of the frozen LLM. This architecture showed that strong multimodal behavior is possible without fully unfreezing very large language and vision backbones.

A related strategy for high-density visual signals was adopted by DeepMind's Flamingo [21]. Rather than a Q-Former, Flamingo used a Perceiver Resampler mechanism, which also cross-attends to large input arrays such as high-resolution images or variable-length videos, using a small set of latent learnable query vectors. Flamingo then interleaved these compressed visual tokens with standard text tokens inside a frozen LLM through gated cross-attention layers and reported strong few-shot and in-context reasoning behavior.

LLaVA (Large Language-and-Vision Assistant) [22] simplified these bridging architectures by showing that a Multi-Layer Perceptron (MLP) projection layer can map visual features from a pretrained CLIP encoder into the vocabulary embedding space of an LLM, without using Q-Formers or Resamplers. Through visual instruction tuning on image-text instruction data, LLaVA reported strong multimodal dialogue performance. More recently, open-source initiatives expanded VLM development. Models like InternVL [23] focus on scaling the vision foundation model for broad visual-linguistic tasks, while the Molmo family [24] emphasizes curated open multimodal data and efficient projector architectures.

2.2.3. Medical Vision-Language Models

Adapting VLMs to the medical domain presents additional challenges. Medical images, including high-resolution multi-parametric MRIs and chest X-rays, have different characteristics from natural images in datasets such as COCO and ImageNet. Furthermore, clinical texts use specialized vocabulary, and tolerance for factual error in medical AI is low.

Early attempts to bridge this gap focused on domain-specific contrastive pretraining. BiomedCLIP [25] pretrained a CLIP-style architecture from scratch on 15 million biomedical image–text pairs sourced from PubMed Central articles, showing that in-domain pretraining improves downstream biomedical classification and retrieval compared to generic CLIP models.

For 2D clinical radiology, development has accelerated in recent years [26]. CheXagent [27] was introduced as a clinical foundation model for chest X-ray interpretation, fine-tuned on large corpora of radiology reports to interpret images and answer clinical questions. MAIRA-2 [28] advanced grounded report generation by linking generated assertions to localized bounding boxes in the original X-ray, reducing unsupported findings and improving trustworthiness.

For 3D medical imaging, the challenge is more severe because volumetric data is large and paired text data is limited. Hamamci et al. [3] introduced CT-CLIP, a contrastive learning framework engineered for 3D computed tomography. Trained on the CT-RATE dataset, which pairs 3D volumetric CT scans with corresponding free-text radiology reports, CT-CLIP learns 3D structural visual representations aligned with clinical text. This work is among the earliest large-scale efforts to apply vision–language pretraining directly to volumetric medical data.

MedGemma [8] is a family of medical foundation models built on top of the Gemma architecture [29]. It inherits the general-language capabilities of Gemma and adds continued medical pretraining and instruction tuning on biomedical literature, medical exams, and de-identified clinical notes. The instruction-tuned variant MedGemma-4B-IT reports strong zero-shot and few-shot performance on medical reasoning tasks. In this thesis, MedGemma serves as one of the core decoder families evaluated in the report-generation pipeline.

2.3. Decoders and Parameter-Efficient Fine-Tuning

Generating clinically useful radiology reports from visual features requires a strong language decoder. Modern language generation models mainly follow two architectural paradigms: Encoder-Decoder models and Causal Language Models. Understanding the differences between these paradigms is important when selecting a backbone for

medical vision-language systems.

2.3.1. Encoder-Decoder Architectures vs. Causal Modeling

Encoder-Decoder models, such as BART (Bidirectional and Auto-Regressive Transformers) [30] and T5, use a bidirectional encoder to process input context and an autoregressive decoder to generate output tokens. Because the encoder attends to both left and right context during prompt processing, these models work well for tasks that require full-context understanding before generation, such as summarization and machine translation. BART is pretrained by corrupting documents with token masking, deletion, and sentence permutation, then optimizing a reconstruction loss.

In the biomedical domain, BioBART [10] adapts this architecture by continually pretraining the baseline BART model on a large corpus of PubMed abstracts. This domain-specific pretraining helps BioBART retain BART's strong generation quality while adapting vocabulary and latent representations to biomedical terminology. In standard vision-language pipelines using Encoder-Decoder backbones, visual embeddings are typically fed directly into the bidirectional encoder, so the model can form a global contextual representation before autoregressive decoding begins.

Conversely, Causal Language Models (CLMs) use a decoder-only architecture that predicts the next token using only preceding tokens. GPT-2 (Generative Pre-trained Transformer 2) [9] popularized this scalable paradigm and showed that unsupervised next-token prediction on large web corpora can produce coherent zero-shot text generation. The base GPT-2 model has 124M parameters, and its clean architecture makes it a practical baseline for diagnostic report-generation experiments under limited compute.

Unlike bidirectional encoders, causal models process the conditioning prompt autoregressively, including prepended visual tokens used as a soft prompt. This means left and right context are not mixed in a single bidirectional encoding step, but large modern causal models can still capture rich dependencies through scale and training data.

Recent foundation models have scaled the decoder-only paradigm to tens of billions of parameters. The LLaMA family [31] and the Gemma family [29] have shown strong performance in natural language understanding, reasoning, and instruction following. MedGemma [8], including the instruction-tuned MedGemma-4B-IT variant, extends these capabilities with continued medical pretraining and instruction tuning. In causal VLM architectures, preserving the spatial and semantic quality of the visual token prefix is important because downstream generation depends on this initial visual context.

2.3.2. Parameter-Efficient Fine-Tuning (PEFT)

Adapting massive decoders, especially multi-billion parameter foundation models such as MedGemma, to specialized tasks like organ-specific radiology report generation through full fine-tuning is often computationally prohibitive and can degrade general language behavior. Parameter-efficient fine-tuning (PEFT) methods address this by updating only a small fraction of model parameters while keeping most pretrained weights frozen.

Early PEFT strategies included Adapter modules [32], which introduced small trainable feed-forward bottleneck networks between frozen multi-head attention and feed-forward transformer sub-layers. Another approach, Prefix-Tuning [33], optimizes a sequence of continuous task-specific prompt vectors prepended to transformer layers. While effective in reducing forgetting, these methods alter the network topology and can introduce additional inference latency or reduce available context length.

LoRA (Low-Rank Adaptation) [34] addresses these issues and is now widely adopted in foundation-model fine-tuning. LoRA assumes that required updates to dense weight matrices have low intrinsic rank. It introduces trainable low-rank matrices in parallel with frozen linear layers, most often query and value projections in self-attention. Instead of updating the full matrix $W_0 \in \mathbb{R}^{d \times k}$, LoRA learns smaller matrices $A \in \mathbb{R}^{d \times r}$ and $B \in \mathbb{R}^{r \times k}$ where $r \ll \min(d, k)$, yielding $W_0 + \Delta W = W_0 + BA$. Because BA can be merged into W_0 for deployment, LoRA does not add extra inference latency after merging.

To further reduce training cost, QLoRA [35] combines LoRA with 4-bit Normal Float (NF4) double quantization. In QLoRA, frozen pretrained model weights are stored in 4-bit precision, while only the lightweight trainable LoRA adapter matrices are cast to higher precision such as BFloat16 during backpropagation. This combination substantially reduces VRAM requirements for fine-tuning multi-billion parameter foundation models and enables faster iteration on standard hardware.

2.4. Radiology Report Generation

Automatic radiology report generation aims to produce clinically accurate free-text reports from medical images. This task is more demanding than generic image captioning because generated reports must remain factually correct, cover relevant pathological findings, explicitly state negative findings when needed, and follow clinical reporting conventions.

2.4.1. Traditional and Early Transformer Approaches

Early approaches to radiology report generation adapted encoder–decoder architectures from natural image captioning. Jing et al. [36] proposed a co-attention mechanism combined with a hierarchical LSTM decoder to generate structured medical reports from chest X-rays. However, these CNN–RNN frameworks often produced generic and repetitive descriptions, and they had difficulty capturing rare or subtle findings under strong data imbalance.

Transformer-based methods later improved report quality by tracking long-range context more effectively. Chen et al. [37] introduced a memory-driven transformer with a relational memory module to retain key clinical information during autoregressive generation, which improved coherence in longer reports. In follow-up work, Chen et al. [38] proposed cross-modal memory networks with separate but interacting memory banks for visual and textual features, enabling stronger cross-modal reasoning. Nicolson et al. [39] further showed that warm-starting both the vision encoder from sources such as ImageNet or the CheXpert dataset [40] and the language decoder from models such as clinical BERT can substantially improve chest X-ray report generation compared with training from scratch.

2.4.2. The Evaluation Paradigm: From N-Grams to Clinical Efficacy

Early report-generation studies relied heavily on lexical overlap metrics such as BLEU, ROUGE, and METEOR. In medical reporting, lexical overlap alone is insufficient because clinically meaningful errors can occur with small wording changes. The field therefore shifted toward clinically grounded metrics such as CheXbert [41], RadGraph [6], and GREEN [7], which better reflect factual and relational correctness. In this thesis, the high-level motivation is introduced here, while the operational metric interpretation policy is defined in Section 4.2.2.

2.4.3. 2D Radiology Foundation Models

As the field moved toward foundation models, researchers began adapting large frozen language models as report decoders. R2GenGPT [42] showed that combining a frozen LLM with a trainable visual encoder and a lightweight projection layer can generate radiology reports and achieve competitive results on common natural language generation and clinical efficacy metrics. This setup benefits from the language knowledge in pretrained LLMs while keeping multimodal training costs manageable.

Recently, foundation models tailored for 2D X-ray interpretation have emerged. CheXagent [27] is a clinical foundation model for chest X-rays. By fine-tuning a large VLM on radiology reports and visual question-answering pairs, CheXagent

reported strong performance on both report generation and interactive clinical question-answering tasks.

At the same time, the architectural focus shifted from linguistic fluency toward clinical grounding. MAIRA-2 [28] introduced grounded radiology report generation with localized grounding of reported findings in the original X-ray. This grounding reduced unsupported findings and addressed an important safety requirement for medical deployment.

2.4.4. 3D Volumetric Report Generation

While 2D X-ray interpretation has matured rapidly, 3D volumetric report generation from CT and MRI scans remains an open and challenging frontier. The shift from 2D to 3D sharply increases computational complexity in visual token processing. In addition, before the release of CT-RATE [3], paired 3D volumes and free-text reports were scarce.

The release of CT-RATE spurred the rapid development of several pioneering 3D multimodal foundation models:

- **CT2Rep** [43]: As one of the earliest works using CT-RATE, CT2Rep showed that automated report generation for 3D medical imaging is feasible when 3D visual tokens are projected into a suitable language decoder.
- **M3D** [44]: M3D proposed strategies to compress volumetric data into spatial tokens more efficiently, enabling LLM-based processing of full CT studies under context-length constraints.
- **Argus** [45]: Argus presented benchmarking and model-improvement strategies for 3D radiology VLMs, from 3B-scale models to 70B-scale models, and reported that larger language models tend to improve clinical efficacy metrics such as GREEN.
- **Med3DVLM** [46] and **RadFM** [47]: Both models introduced unified 3D vision-language frameworks that emphasize cross-modal alignment between volumetric voxels and clinical text.

Recent work also emphasized fine-grained anatomical supervision for CT understanding. fVLM [1] introduced large-scale and fine-grained vision-language pretraining for CT and reported strong gains on report-generation benchmarks. Its organ-aware supervision and decomposition perspective directly motivates the organ-guided decomposition strategy used in this thesis.

A key challenge across these works is token compression. A raw 3D CT volume contains far more information than a 2D image, and naive patch extraction can produce

tens of thousands of tokens that overwhelm the LLM decoder. Recent evidence [48] shows that tokenization design is a primary performance driver in 3D VLMs: the paper highlights limitations of slice-wise tokenization and reports gains from compact volumetric tokens trained with a curriculum that includes local reconstruction, overlapping-window tiling, and long-context refinement.

Table 2.1.: Performance benchmarking of recent 3D volumetric foundation models for radiology report generation on CT-RATE within the CT-3DRRG benchmark. All numeric values are taken directly from Table 2 of Argus [45]. CT2Rep, RadFM, and M3D rows are Argus re-evaluations of the original methods [43, 47, 44] in the normal-resolution setting ($256 \times 256 \times 64$), while Argus rows are reported in the high-resolution setting ($512 \times 512 \times 256$).

Model Name	Parameters	Input Resolution	Avg. NLP	GREEN	RaTEScore	RadGraphXL
CT2Rep-3B	3B	$256 \times 256 \times 64$	38.77	48.96	58.10	25.14
M3D-3B	3B	$256 \times 256 \times 64$	40.23	50.31	60.16	26.08
RadFM-3B	3B	$256 \times 256 \times 64$	39.95	49.46	59.02	25.73
Argus-3B	3B	$512 \times 512 \times 256$	43.03	55.56	66.53	29.52
Argus-8B	8B	$512 \times 512 \times 256$	45.81	58.42	70.68	32.04
Argus-70B	70B	$512 \times 512 \times 256$	**47.98**	**60.22**	**72.53**	**33.07**

As shown in Table 2.1, within the reported benchmark settings, higher input resolution and larger language decoders in Argus are associated with stronger clinical-efficacy scores.

2.5. 3D Medical Image Segmentation and Organ-Guided Attention

Accurate anatomical localization is essential for generating specific and clinically actionable radiology reports. The availability of automated whole-body 3D segmentation tools has enabled VLM architectures that use anatomical priors to ground text generation.

2.5.1. Volumetric Segmentation Frameworks

While early segmentation models relied on 3D CNNs such as 3D U-Net, transformer-based architectures have become prominent by capturing long-range contextual dependencies more effectively. TransUNet [15] and Swin-UNet [49] demonstrated strong results for 2D medical segmentation, but volumetric data requires dedicated 3D processing.

nnFormer (Interleaved Transformer for Volumetric Medical Image Segmentation) [50] extends transformer capabilities to 3D medical images. By interleaving local 3D convolution operations with global multi-head self-attention, nnFormer captures both local texture cues and broader geometric relationships between organs, and reports strong benchmarks on multiple 3D datasets.

In practical clinical pipelines, TotalSegmentator [51] is a widely used tool for automatic segmentation. Built on the nnU-Net framework, it provides out-of-the-box segmentation of 104 anatomical structures, including major organs, bones, vessels, and muscles, from standard CT images. The resulting 3D masks can serve as precise anatomical priors for downstream generative tasks.

2.5.2. Organ-Guided Attention and Clinical Grounding

Incorporating these anatomical priors into VLM architectures enables a shift from global image captioning to localized organ-specific reasoning. Rather than processing an entire CT volume as a uniform sequence of visual tokens, organ-guided mechanisms restrict or bias cross-attention to regions associated with specific query structures such as the lungs or liver.

This approach draws on learnable query architectures such as the Perceiver [52], where a fixed set of latent vectors attends to a large sensory input. In medical settings, these latent vectors can represent specific organs. By masking visual features with 3D segmentation maps before cross-attention, the language decoder is constrained to focus on relevant anatomy when generating each report segment; recent organ-mask-guided report generation studies support this design direction [53, 54].

Recent radiology report generation work also shows that auxiliary clinical objectives can strengthen organ-level representations during training [55, 54]. Joint optimization with diagnosis-oriented signals such as disease prediction, terminology prediction, or organ-aware diagnosis losses encourages the visual encoder to separate subtle abnormal cues in anatomically relevant regions. This additional supervision provides a practical inductive bias for more clinically grounded report generation.

3. Methodology

3.1. Pipeline Overview

This thesis studies organ-aware report generation from 3D chest CT. The model input is a CT volume $V \in \mathbb{R}^{D \times H \times W}$ together with organ masks $\{M_o\}_{o \in \mathcal{O}}$ for a fixed organ set $\mathcal{O}$. The output is an organ-structured report in which each organ receives a dedicated text segment.

For patient i, we model:

$$\hat{Y}_i = f_\theta(V_i, \{M_{i,o}\}_{o \in \mathcal{O}}), \tag{3.1}$$

where $\hat{Y}_i = \{\hat{y}_{i,o}\}_{o \in \mathcal{O}}$ denotes organ-level generated text. A report-level prediction is assembled by concatenating organ sections in a fixed anatomical order.

The end-to-end workflow contains six stages:

1. CT preprocessing and mask preparation.
2. Report decomposition into organ-level supervision.
3. Organ-aware visual token extraction from a 3D ViT encoder.
4. Projection/bridging into decoder embedding space.
5. Organ-conditioned text generation.
6. Report assembly and metric computation.

Figure 3.1 illustrates this pipeline from free-text report decomposition to organ-conditioned generation.

The same interface is used across four decoder families: MedGemma [8], BERT-base [2], GPT-2 [9], and BioBART [10].

3.2. Data and Targets

3.2.1. Volume and Mask Preprocessing

The training and evaluation code uses a consistent MONAI-based transform stack. Given raw NIfTI CT and segmentation volumes, preprocessing applies:

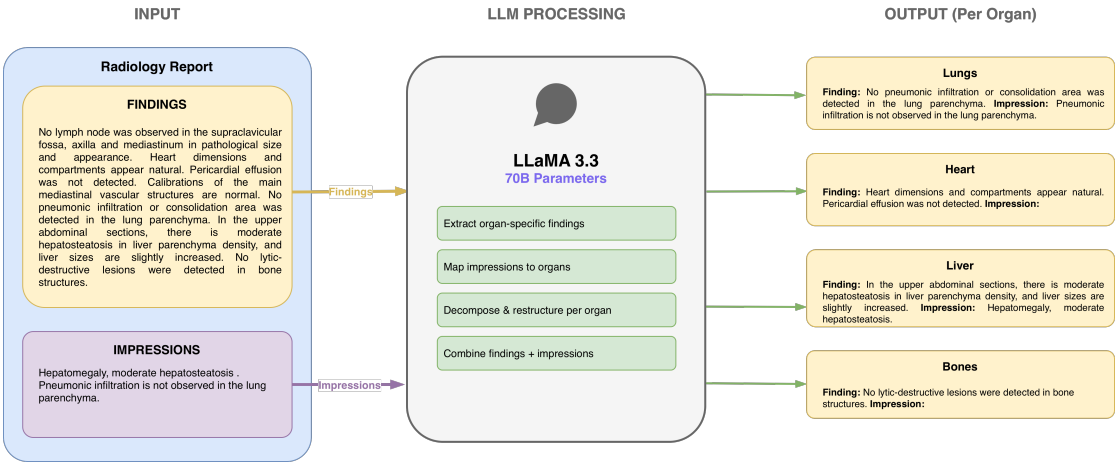

Figure 3.1.: Organ decomposition and generation pipeline. A free-text radiology report is decomposed into organ-keyed targets, aligned with CT volume and organ masks, and used to train organ-conditioned report generation. Adapted from fVLM [1] with modifications for organ-level supervision and analysis.

1. channel standardization and axis transposition,
2. HU clipping ($[-1150, 350]$) and min-max normalization to $[0, 1]$,
3. spatial harmonization to $(112, 256, 352)$ via padding/resizing,
4. trilinear interpolation for CT and nearest-neighbor interpolation for masks.

Replacing center-cropping with full-volume resizing reduces accidental exclusion of peripheral anatomy.

3.2.2. Target Organ Set and Segmentation Mapping

The final schema uses 12 organs:

$$\mathcal{O} = \{\text{lung, heart, esophagus, liver, gallbladder, stomach,} \\ \text{pancreas, spleen, kidney, aorta, trachea, rib}\}. \tag{3.2}$$

Mask extraction follows fixed segmentation-ID mappings summarized in Table 3.1.

3.2.3. Report Decomposition Targets

Reference reports are decomposed into organ-keyed JSON records using an instruction-following LLM pipeline based on Llama-3.3-70B-Instruct. Inference is served through

Table 3.1.: Organ-to-segmentation-ID mapping used for binary mask construction.

Organ	Segmentation IDs
Lung	10, 11, 12, 13, 14
Heart	51, 61
Aorta	52
Esophagus	15
Trachea	16
Rib	92–115
Liver	5
Gallbladder	4
Stomach	6
Pancreas	7
Spleen	1
Kidney	2, 3

vLLM [56] with AWQ quantization [57]. The decomposition enforces:

1. schema-constrained JSON output,
2. one text field per organ key,
3. explicit empty/null handling for missing organs.

This converts free-text supervision into organ-conditioned targets and enables organ-level error analysis.

During training, each organ is paired with an organ-specific prompt. MedGemma branches use chat-format prompts, while BERT-base/GPT-2/BioBART branches use shorter textual prompts such as `Describe [organ]:`. In all branches, loss is masked to the response region only.

3.2.4. Organ Visibility and Report Presence Distribution

Although CT-RATE is a chest CT dataset, upper-abdominal organs appear in a non-trivial subset of studies. To make this explicit, we report organ visibility across the dataset and organ-level report presence after decomposition.

The first distribution is computed from segmentation masks and measures how often each organ is visually present. The second distribution is computed from decomposed report targets and measures how often each organ receives a report entry. Comparing the two distributions helps separate visual sparsity from text-label sparsity and directly

motivates the empty-organ handling and imbalance-control strategies used later in training.

Placeholder figure
Organ visibility distribution across CT-RATE

Figure 3.2.: Organ visibility distribution across CT-RATE, measured as the fraction of studies with a non-empty organ mask.

Placeholder figure
Organ-level report presence distribution across CT-RATE

Figure 3.3.: Organ-level report presence distribution across CT-RATE, measured from decomposed report targets.

3.3. Model Architecture

3.3.1. 3D Visual Backbone

All principal variants use a 3D ViT encoder initialized from pretrained weights and fine-tuned end-to-end. The encoder architecture and default backbone settings are directly adapted from the fVLM implementation [1] to keep the visual frontend aligned with prior work. The standard configuration uses input size $(112, 256, 352)$, patch size $(16, 16, 32)$, and hidden size 768.

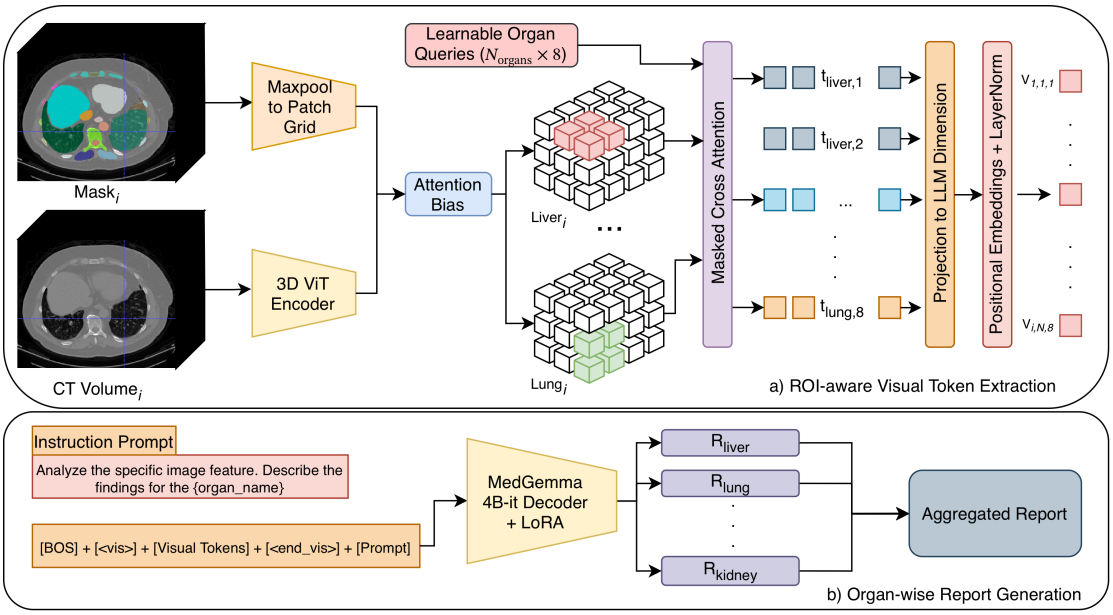

Figure 3.4.: Overview of the proposed organ-aware medical VLM. (a) ROI-aware visual token extraction: organ masks are pooled to the ViT patch grid and used as attention bias in masked cross-attention with learnable organ queries, producing organ-specific visual tokens that are projected to the LLM embedding space and enriched with positional embeddings and layer normalization. (b) Organ-wise report generation: the visual tokens are inserted into a multimodal prefix together with an instruction prompt and decoded by MedGemma-4B-it with LoRA adapters to generate organ-level findings, which are aggregated into the final report. Adapted from fVLM [1] with modifications for organ-level supervision and analysis.

3.3.2. Organ Queries and Masked Cross-Attention

Let $F(V) \in \mathbb{R}^{T \times d_v}$ be ViT token features and $Q_o \in \mathbb{R}^{K \times d_v}$ be learned queries for organ o. Organ masks are downsampled to the ViT token grid and converted into additive attention bias B_o that blocks background tokens.

Organ token extraction is:

$$Z_o = \mathrm{MHA}(Q_o, F(V), F(V); B_o), \tag{3.3}$$

where $Z_o \in \mathbb{R}^{K \times d_v}$. In implementation, mask downsampling is aligned to the token-grid geometry $(7, 16, 11)$.

3.3.3. Token Granularity and Empty-Organ Safety

Two token-interface regimes are used:

- **Multi-token interface:** $K = 8$ tokens per organ (96 tokens for 12 organs).
- **Compressed interface:** effective one-token-per-organ representation before decoder conditioning.

Empty masks are explicitly handled. If an organ query sees only blocked positions, attention bias is reset for that path to avoid undefined softmax behavior and NaN propagation.

3.3.4. Projection, Stabilization, and Sentinel Wrapping

Visual features are projected from $d_v = 768$ to decoder hidden size d_l:

$$\tilde{Z}_o = W_p Z_o + b_p, \quad W_p \in \mathbb{R}^{d_v \times d_l}. \tag{3.4}$$

Before concatenation with text embeddings, two stabilization steps are applied:

1. layer normalization on projected visual tokens,
2. variance matching to decoder embedding scale.

For MedGemma, the sequence format is:

$$[\mathrm{BOS}],\ \texttt{<vis>},\ \tilde{Z}_o,\ \texttt{<end_vis>},\ \text{text prompt and target tokens.} \tag{3.5}$$

Loss is masked over injected visual tokens so gradients are concentrated on target text generation.

3.4. Variants Evaluated

Table 3.2 summarizes the major variants with concise display names. The raw run IDs are listed in Appendix B. The baseline uses masked organ cross-attention and a direct projector. The strongest MedGemma variant adds visual positional embeddings and explicit visual sentinels. Perceiver and multiscale variants test heavier visual aggregation/fusion. The v3 branch adds a CNN stem and alignment regularization. Curriculum and hard-example branches isolate optimization-policy effects under the same core interface. Decoder-family branches cover MedGemma, BERT-base, GPT-2, and BioBART with the same visual frontend.

Table 3.2.: Model variants and principal design differences.

Variant	**Main Design Choice**
Baseline-8T	Baseline MedGemma branch with 8 organ tokens, masked cross-attention, projector, and weighted LM training.
Prefix-Stable-8T	Adds visual positional embeddings and explicit visual sentinel wrapping; strongest global performance in current runs.
MaxPool-8T	Keeps the baseline design but changes mask downsampling to max pooling before token-grid attention.
Perceiver-Bridge	Replaces single cross-attention with stacked Perceiver-style self/cross-attention blocks.
Multiscale-FPN	Fuses intermediate ViT features from multiple depths before organ-query attention.
CNN-Align-v3	Adds CNN stem and visual-text alignment loss; explores stronger encoder bias and contrastive regularization.
Align-v1	Adds alignment regularization without the full v3 architectural stack.
Curriculum-2Phase	Two-phase pathology-first curriculum before full-distribution training.
Hard-Mining	Dynamic weighted sampler emphasizing high-loss samples.
Undersample-DefaultText	Reduces training exposure to default empty-organ text via organ-specific keep probabilities.
Weighted-Organ-Loss	Reweights loss contributions for explicit versus default organ statements.
BERT-base / GPT-2 / BioBART branches	Same organ-attention encoder interface with decoder-family adaptation for cross-family comparison.

3.4.1. Controlled Comparison Groups

To keep interpretation focused, we organize results by groups where one factor is changed at a time.

- Interface group (area mask downsampling): Baseline-8T and Prefix-Stable-8T isolate visual-prefix design under the same area-based mask-to-token mapping.
- Mask-downsampling transition: Baseline-8T and MaxPool-8T isolate the effect of switching mask downsampling from area interpolation to max pooling.
- Architecture group (maxpool lineage): MaxPool-8T, Perceiver-Bridge, Multiscale-FPN, Align-v1, and CNN-Align-v3 isolate visual-backbone and bridge choices under a shared maxpool-based interface.
- Training-policy group (area lineage): Prefix-Stable-8T, Undersample-DefaultText, and Weighted-Organ-Loss isolate optimization and imbalance-control choices in the area-based branch.
- Training-policy group (maxpool lineage): MaxPool-8T, Hard-Mining, and Curriculum-2Phase isolate optimization-policy effects in the maxpool-based branch.
- No-findings text-policy group: v3-Resized-DefaultText and v3-Resized-SynonymText share the same v3-resized backbone and differ only in default empty-organ phrasing.
- Decoder-family group: MedGemma, BERT-base, GPT-2, and BioBART use the same organ-attention visual frontend for cross-decoder comparison.

3.5. Decoder Adaptation and Training Objective

3.5.1. Decoder-Specific Adaptation

MedGemma is adapted with LoRA [34] while the base model remains frozen. Main settings are rank $r = 16$, $\alpha = 32$, dropout 0.05, and target modules `q_proj, k_proj, v_proj, o_proj, gate_proj, up_proj, down_proj`.

BERT-base, GPT-2, and BioBART branches use the same organ-attention visual frontend within a `VisionEncoderDecoderModel` interface. The BERT-base branch is trained with language modeling loss as a reproducible reference aligned with the fVLM decoder description. Decoder-side adaptation unfreezes a restricted subset (cross-attention/normalization/output layers and embeddings). For BioBART, shared embeddings and output-head weights are copied from pretrained checkpoints to avoid random-initialization drift in wrapper mode.

3.5.2. Weighted Language Modeling Loss

With batch index i, organ o, and token position t, the primary objective is:

$$\mathcal{L}_{\mathrm{LM}} = \frac{1}{B|\mathcal{O}|} \sum_{i=1}^{B} \sum_{o \in \mathcal{O}} w_{i,o} \left(\frac{1}{T_{i,o}} \sum_{t=1}^{T_{i,o}} \mathrm{CE}(y_{i,o,t}, \hat{y}_{i,o,t}) \right), \tag{3.6}$$

where $w_{i,o}$ is an organ/sample weight for imbalance control.

3.5.3. Optional Alignment Objective

Some variants add visual-text contrastive alignment:

$$S_{o,o'} = \frac{\langle v_o, t_{o'} \rangle}{\tau}, \tag{3.7}$$

and optimize:

$$\mathcal{L} = \mathcal{L}_{\mathrm{LM}} + \lambda \mathcal{L}_{\mathrm{align}}. \tag{3.8}$$

This is used mainly in CNN-Align-v3 and Align-v1, and in selected BERT-base/GPT-2/BioBART branches.

3.6. Optimization and Inference

3.6.1. Shared Optimization Settings

Across main training runs, settings are largely standardized:

- batch size 1 per device, gradient accumulation 8,
- learning rate 1×10^{-4}, weight decay 0.01, warmup ratio 0.05,
- 1 training epochs,
- bf16 with gradient checkpointing,
- checkpoint/evaluation every 200 steps.

3.6.2. Training-Strategy Variants

Beyond architecture, the thesis evaluates curriculum learning, hard-example mining, undersampling of dominant default-text targets, and organ-weighted losses.

3.6.3. Organ-Wise Inference and Report Assembly

At inference, one prompt is generated per organ and decoded with beam search. MedGemma runs typically use 3 beams and `max_new_tokens=100`; BERT-base/GPT-2/BioBART runs typically use 4 beams and `max_length=120`. Outputs are assembled in fixed organ order:

$$\hat{R} = \texttt{LUNG:}\ \hat{y}_{\text{lung}} \parallel \cdots \parallel \texttt{KIDNEY:}\ \hat{y}_{\text{kidney}}. \tag{3.9}$$

Organs with weak or absent visual support are not forced to produce abnormal statements, reducing schema-induced hallucination.

3.7. Reproducibility Notes

- Training/evaluation artifacts are isolated per variant to prevent checkpoint and metric contamination.
- Official runs include generated report files and standardized `metrics_final.csv` summaries.
- Metric computation is centralized through one RadEval-based script with fixed key mapping [58].
- Decoder comparison uses only official organ-attention result folders.

This design keeps the thesis contribution focused: controlling organ grounding and token interface under a consistent data protocol, then comparing architecture and decoder choices on that shared foundation.

4. Experiments and Results

4.1. Experimental Setup

4.1.1. Objectives and Research Questions

This chapter evaluates organ-aware 3D CT report generation under a consistent CT-RATE protocol. Results are organized by four research questions:

- **RQ1 (Token Interface):** Does organ-token interface design improve report quality?
- **RQ2 (Architecture):** Do heavier visual modules outperform the simpler masked cross-attention baseline?
- **RQ3 (Training Strategy):** How much do curriculum, hard-example, and imbalance policies change outcomes?
- **RQ4 (Decoder Family):** Under the same frontend, how do MedGemma, BERT-base, GPT-2, and BioBART compare?

4.1.2. Dataset and Preprocessing

All experiments use **CT-RATE** [3], following the official train/validation/test split defined in the CT-RATE release. Table 4.1 summarizes dataset-level context.

Table 4.1.: CT-RATE dataset-level statistics used in this thesis.

Statistic	**Value**
Total CT Volumes	25,692
Unique Patients	21,304
Modality	3D chest CT
Text Modality	Findings + impression
Split Policy	Official train/validation/test split

Preprocessing follows Chapter 3: HU clipping and normalization, spatial harmonization to $(112, 256, 352)$, organ-mask extraction, and report decomposition into organ sections.

4.1.3. Organ Coverage Profile

Per-organ support is uneven in decomposed chest-CT reporting. Table 4.2 reports matched-reference counts from the best MedGemma evaluation artifact using the same pipeline for all metrics.

Table 4.2.: Per-organ coverage among matched validation samples (GLOBAL = 1563).

Organ	N	Coverage (%)
Lung	1562	99.94
Heart	1446	92.51
Esophagus	1353	86.56
Trachea	1411	90.28
Aorta	867	55.47
Liver	850	54.38
Kidney	280	17.91
Gallbladder	153	9.79
Spleen	146	9.34
Rib	117	7.49
Pancreas	57	3.65
Stomach	20	1.28

4.1.4. Implementation and Optimization Defaults

Training/evaluation uses PyTorch, HuggingFace Transformers, and MONAI. Default optimization settings across training runs are listed in Table 4.3.

4.1.5. Ablation Axes

Table 4.4 defines the comparison axes used throughout this chapter. Display-name to run-ID mapping is provided in Appendix B.

4.2. Evaluation Protocol

4.2.1. Metric Families

We report complementary metric groups. Lexical overlap is measured with BLEU-4 [4], ROUGE-L [5], METEOR [59], and CIDEr [60]. Semantic similarity is measured with

Table 4.3.: Shared optimization defaults across main training runs.

Hyperparameter	**Value**
Per-device batch size	1
Gradient accumulation	8
Learning rate	1×10^{-4}
Weight decay	0.01
Warmup ratio	0.05
Training-stage epochs	1
Precision	bf16
Gradient checkpointing	Enabled
Save/eval frequency	Every 200 steps

Table 4.4.: Ablation axes and evaluated variants.

Axis	**Variants**
Token and prefix design in the area lineage	Baseline-8T, Prefix-Stable-8T
Mask-downsampling transition	Baseline-8T, MaxPool-8T
Encoder architecture in the maxpool lineage	MaxPool-8T, Perceiver-Bridge, Multiscale-FPN, Align-v1, CNN-Align-v3
Training strategy in the area lineage	Prefix-Stable-8T, Undersample-DefaultText, Weighted-Organ-Loss
Training strategy in the maxpool lineage	MaxPool-8T, Hard-Mining, Curriculum-2Phase
Default-text phrasing as a strict pair	v3-Resized-DefaultText and v3-Resized-SynonymText
Decoder family	MedGemma, BERT-base, GPT-2, and BioBART under shared organ-attention frontend
Protocol-matched baseline	fVLM-aligned encoder setup on CT-RATE with a BERT-base decoder [1]

BERTScore [61]. Clinical and factual consistency is measured with CheXbert [41], RadGraph [6], GREEN [7], RadCliQ [62], and an SRR-BERT style score. Here, CheXbert is the report-labeling evaluator and should not be conflated with the CheXpert chest X-ray dataset [40] used in model pretraining pipelines.

Formal equations are provided in Appendix A. Chapter-level interpretation focuses on metric behavior and agreement patterns.

4.2.2. Metric Interpretation Policy

Model ranking is anchored on GREEN and RadGraph, then cross-checked with lexical-semantic metrics. CheXbert is reported but interpreted cautiously for organ-decomposed CT text because its design assumptions are closer to full-report label extraction workflows. Unless noted otherwise, internal metric values in this thesis are reported on a 0–100 scale.

For decoder-family analysis, we also report generation-behavior diagnostics to detect template collapse. These include exact-report uniqueness ratio, top-k template coverage, and effective-template ratio $\exp(H)/N$, where H is Shannon entropy over normalized report-frequency counts and N is the number of generated reports.

4.2.3. Evaluation Reproducibility and Result Provenance

All checkpoints are evaluated with one standardized workflow: report generation, metric computation with the same RadEval framework [58], and structured aggregation of global and organ-level scores. This removes evaluation variability and keeps model comparisons methodologically consistent.

Metric definitions and table semantics are fixed before comparison. As a result, every experiment in this chapter is interpreted under the same scoring rules.

Quantitative claims are drawn only from official runs produced under this shared protocol. MedGemma ablations, text-policy comparisons, and decoder-family comparisons all follow the same data split, preprocessing assumptions, and evaluation pipeline.

4.2.4. Qualitative Protocol for Attention Maps

Cross-attention maps are interpreted with the following checks: spatial overlap with the queried organ mask, compactness vs diffusion, stability across planes, and false activation in anatomically confounding neighbors.

4.3. Results by Research Question

4.3.1. Main MedGemma Result Tables

Table 4.5 reports the core MedGemma ablations, and Table 4.6 provides the full aggregated matrix.

Table 4.5.: Core MedGemma ablations on the CT-RATE validation set.

Model	GREEN	BLEU-4	METEOR	ROUGE-L	CIDEr	BERTScore	RadGraph	CheXbert	RadCliQ	SRR-BERT
Baseline-8T	32.3	9.2	32.8	34.1	4.1	56.7	24.3	23.9	103.7	**33.0**
Prefix-Stable-8T	**34.8**	**10.5**	**34.4**	**37.9**	**8.4**	**59.6**	**26.8**	2.6	**110.4**	32.4
Multiscale-FPN	32.7	8.6	32.2	33.7	4.3	56.6	24.2	24.1	102.2	32.6
Perceiver-Bridge	31.6	8.2	31.7	33.3	3.6	56.4	23.6	22.1	100.8	30.8
CNN-Align-v3	31.3	8.3	31.8	33.5	3.0	56.4	24.2	20.6	100.7	30.1
Curriculum-2Phase	19.4	3.2	25.0	25.0	1.8	50.7	13.3	**26.9**	77.3	32.2

Table 4.6.: Full MedGemma training matrix.

Model	GREEN	BLEU-4	METEOR	ROUGE-L	CIDEr	BERTScore	RadGraph	CheXbert	RadCliQ	SRR-BERT
Curriculum-2Phase	19.4	3.2	25.0	25.0	1.8	50.7	13.3	26.9	77.3	32.2
Hard-Mining	31.6	8.3	31.9	33.2	4.3	56.3	23.7	19.8	99.9	30.7
Undersample-DefaultText	31.8	8.2	31.6	33.4	2.8	56.3	23.7	20.3	100.0	29.7
Weighted-Organ-Loss	29.8	6.3	29.4	31.6	2.5	55.5	21.4	19.9	95.2	29.3
Align-v1	31.3	8.3	31.8	33.2	3.2	56.4	23.8	21.6	100.7	31.6
CNN-Align-v3	31.3	8.3	31.8	33.5	3.0	56.4	24.2	20.6	100.7	30.1
Prefix-Stable-8T	**34.8**	**10.5**	**34.4**	**37.9**	**8.4**	**59.6**	**26.8**	2.6	**110.4**	32.4
Baseline-8T	32.3	9.2	32.8	34.1	4.1	56.7	24.3	23.9	103.7	**33.0**
MaxPool-8T	32.0	8.6	32.2	33.8	3.5	56.6	24.1	21.3	102.0	31.6
Multiscale-FPN	32.7	8.6	32.2	33.7	4.3	56.6	24.2	**24.1**	102.2	32.6
Perceiver-Bridge	31.6	8.2	31.7	33.3	3.6	56.4	23.6	22.1	100.8	30.8

4.3.2. RQ1: Token Interface Design

RQ1 is answered positively. Prefix-Stable-8T is the strongest global model and improves both the primary clinical metrics and the lexical-semantic metrics relative to Baseline-8T. The strongest gains are concentrated in overall report quality and clinical structure signals, which supports the effect of interface stabilization.

The same conclusion is supported by the mask-downsampling transition. MaxPool-8T remains close to Baseline-8T and does not produce comparable gains, so the main improvement is not explained by mask downsampling alone. The stronger effect comes from the stabilized visual-prefix design in Prefix-Stable-8T.

4.3.3. RQ2: Architecture Complexity

Table 4.7 summarizes deltas against baseline for representative models. In the maxpool-derived architecture branch, heavier modules such as Perceiver, multiscale, and v3-alignment variants do not consistently outperform MaxPool-8T under the current training budget.

Within this branch, Multiscale-FPN is the strongest of the heavier variants, but its gains are modest and not uniform across metric families. Perceiver-Bridge and CNN-Align-v3 remain below MaxPool-8T on the main global signals, which weakens the claim that added architectural complexity is the main driver of quality in this setup.

The practical interpretation is that complexity helps only in narrow cases under the current budget and does not establish a robust global advantage. Under one-epoch training with the current optimization constraints, interface quality remains more reliable than heavier visual modules.

Table 4.7.: Delta against Baseline-8T. Positive values are better.

Model	ΔGREEN	ΔBLEU-4	ΔRadGraph	ΔRadCliQ
Prefix-Stable-8T	+2.49	+1.31	+2.50	+6.68
Multiscale-FPN	+0.45	-0.65	-0.15	-1.56
Perceiver-Bridge	-0.70	-0.99	-0.68	-2.98
CNN-Align-v3	-0.97	-0.98	-0.09	-3.02
Hard-Mining	-0.71	-0.88	-0.64	-3.86
Curriculum-2Phase	-12.86	-6.02	-11.00	-26.47

For strict within-branch interpretation, maxpool-derived variants should be compared against MaxPool-8T in Table 4.6, while area-derived policy variants should be compared against Prefix-Stable-8T.

4.3.4. RQ3: Training Strategy

Training-policy interventions split into two branches. In the area-derived branch, Undersample-DefaultText and Weighted-Organ-Loss do not surpass Prefix-Stable-8T. In the maxpool-derived branch, Hard-Mining and Curriculum-2Phase do not surpass MaxPool-8T, and curriculum learning degrades most global metrics in the current two-phase configuration.

In the area-derived branch, the gap to Prefix-Stable-8T is clear across clinical and lexical-semantic groups. Undersample-DefaultText trails the reference model, and

Weighted-Organ-Loss trails further. These results suggest that imbalance-control policies alone do not recover the gain provided by a stronger interface.

In the maxpool-derived branch, Hard-Mining stays closer to MaxPool-8T but still remains below it on the primary quality signals. Curriculum-2Phase shows the largest overall regression in this branch. This likely reflects instability or underfitting under the current schedule rather than a generally negative verdict on curriculum ideas.

4.3.5. Text Policy Check: Default vs Synonym Templates

Table 4.8 compares the v3-resized branch under different default empty-organ phrasing policies. The comparison is a strict one-factor pair: v3-Resized-DefaultText vs v3-Resized-SynonymText.

Table 4.8.: Text-policy comparison in the v3-resized branch.

Model	GREEN	BLEU-4	ROUGE-L	RadGraph	RadCliQ
v3-Resized-DefaultText	28.9	4.9	27.4	20.0	88.9
v3-Resized-SynonymText	**33.6**	**8.2**	33.2	**25.0**	105.7

In this branch, synonym-based default phrasing is associated with better global quality than the default-template baseline. The improvement appears consistently across both clinical and lexical dimensions, indicating that text policy alone can shift measured report quality when architecture and training loop are held fixed. Code inspection indicates the v3-resized default and synonym branches share the same core architecture and training loop, so this is interpreted as a strict text-policy comparison rather than a model-family change.

4.3.6. RQ4: Decoder Family Comparison

Decoder comparison is a core axis with fixed protocol and table schema. Table 4.9 now includes finalized MedGemma, fVLM-aligned BERT-base, GPT-2, and BioBART rows from the same standardized metric pass.

The current evidence shows a mixed but interpretable pattern. BERT-base provides the strongest overall GREEN and broad lexical-semantic quality signals under the shared protocol. MedGemma remains stronger on the relational-clinical structure axis represented by RadGraph. GPT-2 remains stronger than BioBART on most global dimensions, while BioBART is the weakest overall among the four completed decoders.

Because decoder prompting policies differ across families, organ-header completion is not used for cross-decoder ranking. Table 4.10 reports only neutral run diagnostics

such as sample count and average output length.

Table 4.11 adds diversity diagnostics over normalized full reports. BERT-base shows the strongest repetition profile among the four decoders: only 41.3% unique reports, 19.0% coverage by the top five templates, and 48.2% coverage by the top fifty templates. MedGemma shows much lower template reuse, with 82.0% unique reports and 16.6% top-fifty coverage.

Table 4.9.: Decoder comparison on CT-RATE under a shared organ-attention frontend.

Decoder	GREEN	BLEU-4	METEOR	ROUGE-L	CIDEr	BERTScore	RadGraph	CheXbert	RadCliQ	SRR-BERT
MedGemma (best variant)	34.8	10.5	34.4	37.9	8.4	59.6	26.8	2.6	110.4	32.4
BERT-base (fVLM-aligned baseline)	38.2	11.9	37.1	40.3	6.2	62.0	25.2	27.5	109.2	35.3
GPT-2 official v3 run	29.1	15.9	37.1	36.4	8.0	59.9	22.4	38.2	103.8	38.5
BioBART official v3 run	28.8	10.0	32.2	36.5	4.1	59.0	21.9	28.0	96.8	33.5

Table 4.10 provides lightweight run diagnostics that complement the quantitative decoder metrics.

Table 4.10.: Decoder run diagnostics from official generated report files.

Decoder	Samples	Avg words/report
MedGemma best	1564	157.9
BERT-base v3	1563	80.4
GPT-2 v3	1563	98.7
BioBART v3	1563	66.0

Table 4.11.: Decoder diversity diagnostics from normalized generated reports.

Decoder	Unique report ratio (%)	Top-1 template coverage (%)	Top-5 template coverage (%)	Top-50 template coverage (%)	Effective-template ratio (%)
MedGemma (best variant)	82.0	1.3	4.8	16.6	68.9
BERT-base (fVLM-aligned baseline)	41.3	4.7	19.0	48.2	17.8
GPT-2 official v3 run	60.7	4.0	13.2	32.5	35.4
BioBART official v3 run	78.7	1.2	4.3	17.4	65.8

4.4. Fine-Grained Analyses

4.4.1. Organ-Level Analysis

Table 4.12 reports selected organ-level metrics for the best MedGemma variant.

Thoracic organs with strong support tend to show higher stability than low-support abdominal organs.

Table 4.12.: Best MedGemma variant: selected organ-level metrics.

Organ	N	GREEN	RadGraph	CheXbert
LUNG	1562	16.9	7.4	6.0
HEART	1446	62.6	50.2	0.0
ESOPHAGUS	1353	65.1	42.6	83.1
TRACHEA	1411	81.7	31.8	95.7
AORTA	867	35.1	12.5	63.6
LIVER	850	56.1	59.3	69.0
KIDNEY	280	13.4	22.0	40.3

4.4.2. Cross-Attention Activation Case Studies

Cross-attention overlays are extracted with a dedicated visualization script and used to assess localization quality, robustness under multi-region findings, and behavior differences across model variants.

Case Study A: Typical Thoracic Pattern

Placeholder
Case A baseline attention map
Baseline-8T

(a) Baseline model

Placeholder
Case A best-model attention map
Prefix-Stable-8T

(b) Best MedGemma variant

Figure 4.1.: Case Study A: baseline vs best model cross-attention overlays in a thoracic-dominant exam.

Placeholder
Case B baseline attention map
Thorax and upper abdomen visible

(a) Baseline model

Placeholder
Case B best-model attention map
Thorax and upper abdomen visible

(b) Best MedGemma variant

Figure 4.2.: Case Study B: behavior under mixed thoracic and upper-abdominal findings.

Case Study B: Mixed Thoracic and Upper-Abdominal Findings

Case Study C: Baseline vs Perceiver vs Multiscale

4.4.3. fVLM-Aligned Baseline on CT-RATE

To enable direct comparison under the same protocol, this thesis includes a baseline that uses the fVLM-aligned encoder setup with a BERT-base decoder, following the decoder description in the fVLM paper [1]. This baseline is trained and evaluated on CT-RATE with the same preprocessing, report decomposition, and RadEval metric pipeline used for the other models in this chapter.

Its quantitative row is now reported in Table 4.9, which enables direct protocol-matched comparison against the MedGemma, GPT-2, and BioBART runs.

4.5. Chapter Summary and Minimal Limitations Note

The strongest internal model under current protocol is Prefix-Stable-8T. The result pattern is consistent across RQ1 to RQ3: interface stabilization is more beneficial than heavier architectural modules or training-policy complexity at the current compute budget.

The decoder axis for RQ4 now has complete standardized rows for all targeted decoder families in this thesis: MedGemma, fVLM-aligned BERT-base, GPT-2, and BioBART.

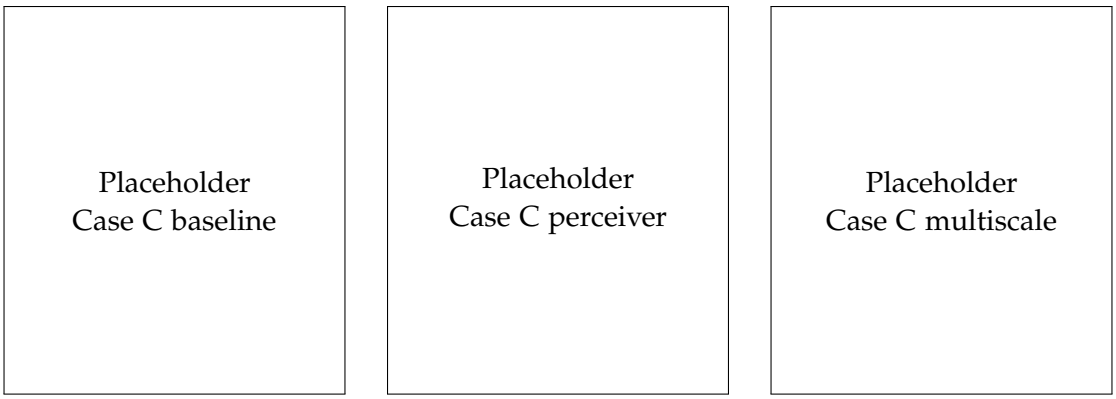

(a) Baseline (b) Perceiver (c) Multiscale

Figure 4.3.: Case Study C: qualitative comparison of attention behavior across architecture variants.

Interpretation limits in this chapter are concise: uneven organ support in chest CT and partial metric-domain mismatch for organ-decomposed text. A full validity discussion is provided in Chapter 5.

5. Discussion

This chapter interprets the evidence from Chapter 4. The goal is to explain why the observed ranking emerged, which conclusions are robust, and where claims should be bounded.

5.1. Why Interface Design Dominated

Empirical signal. Within MedGemma ablations, the strongest model, Prefix-Stable-8T, improves core global metrics such as GREEN, RadGraph, BLEU-4, ROUGE-L, BERTScore, and RadCliQ over Baseline-8T. By contrast, heavier variants show mixed or negative deltas despite higher nominal capacity.

Mechanistic interpretation. Three interface components appear decisive:

1. explicit visual token delimitation (sentinel wrapping),
2. consistent positional encoding over visual prefix tokens,
3. stabilized projection into decoder embedding scale.

Together they reduce ambiguity between visual context and textual instruction/response tokens.

Negative ablations in context. Perceiver-style resampling and multiscale fusion are not intrinsically weak. Under the current low effective batch, long context, and short training budget, their additional complexity likely increases optimization burden more than it improves report-level factuality.

Curriculum and hard-example strategies also underperform the best interface variant. This indicates that weighting/sampling can refine learning but cannot fully compensate for an unstable vision-language interface.

Case-study support. Cross-attention overlays provide spatial evidence consistent with metric trends. When a model exhibits diffuse or anatomically implausible attention despite larger capacity, degraded factual metrics are easier to explain. This is why case studies are treated as supporting evidence for mechanism, not only as qualitative illustration.

Design implication. For this task family, the practical order is to stabilize the visual-language interface first, verify organ grounding, and then scale architectural complexity.

5.2. Metric Disagreement and Interpretation

Different metric families reward different behavior, so disagreement is expected:

- lexical metrics reward phrasing overlap,
- embedding metrics reward semantic proximity,
- clinical metrics reward factual and relational correctness.

The decoder results illustrate this directly. BERT-base is strongest on GREEN and broad lexical-semantic quality, while MedGemma is strongest on RadGraph. GPT-2 remains stronger than BioBART on most global dimensions. CheXbert remains useful but is not treated as the sole clinical proxy for organ-decomposed CT text. Consistent with Section 4.2.1, model ranking prioritizes GREEN and RadGraph, then checks lexical-semantic coherence.

Diversity diagnostics add an important correction to aggregate metric ranking. In Table 4.11, BERT-base has high template reuse, with almost half of reports covered by its top fifty normalized templates. MedGemma shows substantially lower reuse. This explains why BERT can score well on global overlap-style metrics while still producing less case-specific report content.

5.3. Generalization and Organ Coverage

The chest-CT setting yields strong thoracic support and sparse support for several upper-abdominal organs. This long-tail distribution affects both training dynamics and evaluation variance:

- sparse organs have noisier metrics,
- frequent thoracic patterns dominate global optimization,
- template bias risk increases for low-support organs.

Accordingly, organ-level conclusions are most reliable for high-support organs and should be interpreted cautiously for very sparse ones.

5.4. Decoder Family Axis

The decoder-comparison protocol is structurally fixed with a shared frontend, shared metric pipeline, and shared artifact policy. All target rows are now complete under this

protocol: MedGemma, fVLM-aligned BERT-base, GPT-2, and BioBART. The current evidence favors BERT-base on overall global quality, MedGemma on relational-clinical structure by RadGraph, and GPT-2 over BioBART among the remaining decoder alternatives.

For practical deployment under organ-aware reporting objectives, MedGemma is the safer default in this thesis context because it combines stronger RadGraph performance with lower template repetition.

5.5. Relation to Prior Paradigms

Compared with many 2D report-generation settings, 3D CT introduces higher token pressure and stronger grounding demands. The results suggest that decoder scaling or heavier visual modules alone are insufficient if token semantics at the interface are not explicit and stable. This aligns with anatomy-guided trends in recent segmentation-aware and decomposition-aware literature.

5.6. Validity and Limits

Internal validity is strongest for MedGemma-family comparisons because data interfaces and evaluation pipelines are controlled. Decoder-family conclusions are now grounded by completed MedGemma, fVLM-aligned BERT-base, GPT-2, and BioBART rows under one protocol.

Findings are specific to organ-decomposed chest-CT reporting and should not be over-generalized to other modalities or report styles without controlled replication.

Construct validity is strengthened by metric bundles plus case studies, but still depends on imperfect automatic metrics. Human expert evaluation remains outside the current chapter scope.

5.7. Practical Implications and Synthesis

For practitioners, the evidence supports an interface-first recipe:

1. use explicit organ-conditioned supervision,
2. stabilize visual prefix semantics and projection scale,
3. run lightweight ablations before heavy architectural scaling,
4. use metric bundles plus qualitative spatial audits,

5. separate protocol-matched internal comparisons from external contextual baselines.

Overall synthesis: under realistic compute constraints, interface calibration is the dominant success factor in this organ-aware 3D CT report-generation setup.

6. Conclusion and Future Work

6.1. Conclusion

This thesis studied organ-aware radiology report generation from 3D chest CT with a unified vision-language pipeline. The core objective was to reduce the gap between rich volumetric information and decoder-side token constraints while preserving clinically meaningful report content.

The implemented framework combined organ-level supervision via report decomposition, organ-conditioned visual token extraction, and decoder adaptation under a consistent evaluation protocol. The evidence now includes systematic MedGemma ablations and completed decoder-family rows for MedGemma, fVLM-aligned BERT-base, GPT-2, and BioBART under the same evaluation pass.

The main empirical conclusion is concise: in this setting, stable visual-language interfacing is more decisive than increasing architectural complexity. Within MedGemma ablations, the strongest model variant used explicit visual-prefix structuring and delivered the most consistent improvements on the primary global metrics used in this thesis. Cross-decoder analysis also shows that stronger aggregate lexical-semantic metrics can coexist with higher template reuse, so deployment-oriented interpretation must include diversity and structure diagnostics in addition to metric averages.

Overall, the thesis contributes:

- a reproducible end-to-end organ-aware 3D report generation setup,
- code-grounded ablation evidence on interface, architecture, and training strategy,
- a standardized evaluation workflow supporting multi-metric interpretation,
- a protocol-matched cross-decoder comparison with completed MedGemma, fVLM-aligned BERT-base, GPT-2, and BioBART rows.

The work therefore advances both method (how to structure the task) and practice (how to implement and evaluate it reliably).

6.2. Take-Home Messages

The thesis can be reduced to four practical takeaways:

1. Organ-aware decomposition is not only a data-format choice; it is a training signal that makes failure analysis and controllable generation feasible.
2. In 3D CT report generation, token/interface design can matter more than adding architectural complexity.
3. Multi-metric evaluation is mandatory; single-metric optimization is too fragile for clinical text generation claims.
4. Reproducible artifact discipline (`generated_reports*.csv` + `metrics_final.csv`) is essential for trustworthy model comparison.

These messages are intended to be directly reusable by future work in volumetric medical vision-language systems, independent of decoder brand or training infrastructure.

6.3. Future Work

Future work is prioritized in three tracks.

6.3.1. Track 1: Strengthen the Current Thesis Axis

1. Add multi-seed stability checks for the decoder-family table under the same standardized metric pass.
2. Insert finalized cross-attention case-study figures to complete the quantitative + qualitative evidence pair.
3. Add compact significance reporting (e.g., bootstrap confidence intervals) for key global metrics.

This track is short-horizon and can be completed without redesigning the model stack. Its purpose is to close the evidence loop of the current thesis version.

6.3.2. Track 2: Improve Model Robustness and Efficiency

1. Run controlled token-budget sweeps (1/2/4/8 tokens per organ) under matched compute.
2. Compare mask downsampling strategies (area interpolation vs max-pooling) for mask-to-token alignment.
3. Ablate bridge stabilization choices (with/without variance matching and visual positional embeddings).
4. Compare loss composition (pure LM vs LM+alignment) on branches where alignment is implemented.
5. Compare sampling policies (uniform vs organ-weighted vs hard-example weighted).
6. Explore organ-adaptive token allocation and uncertainty-aware handling for sparse organs.

This track targets the main technical bottlenecks identified by the ablations: token efficiency, interface stability, and long-tail organ robustness.

6.3.3. Track 3: Strengthen Clinical Validity

1. Add human evaluation with radiologist-centered error taxonomy.
2. Expand evaluation to temporal/longitudinal scenarios and clinically realistic reading workflows.
3. Introduce safety-oriented post-generation checks for contradiction and hallucination control.

This track is required for translational credibility. It shifts the system from benchmark-oriented progress to clinically meaningful utility and safety assessment.

6.4. Final Remark

The thesis shows that organ-aware 3D report generation is tractable when anatomical structure is treated as a first-class modeling constraint. With the current framework and completed decoder comparisons, the project is technically mature enough to move toward stronger clinical validation.

A. Metric Equations

This appendix provides the formal definitions of lexical metrics referenced in Chapter 4.

A.1. BLEU

For candidate report c and references $\{r\}$:

$$\text{BLEU} = \text{BP} \cdot \exp\left(\sum_{n=1}^{N} w_n \log p_n\right), \tag{A.1}$$

where p_n is modified n-gram precision and w_n are n-gram weights. The brevity penalty is:

$$\text{BP} = \begin{cases} 1 & c_{len} > r^*_{len} \\ \exp\left(1 - \frac{r^*_{len}}{c_{len}}\right) & \text{otherwise.} \end{cases} \tag{A.2}$$

A.2. ROUGE-L

Using longest common subsequence (LCS):

$$R_{LCS} = \frac{\text{LCS}(c,r)}{|r|}, \qquad P_{LCS} = \frac{\text{LCS}(c,r)}{|c|},$$

$$F_{LCS} = \frac{(1+\beta^2) R_{LCS} P_{LCS}}{R_{LCS} + \beta^2 P_{LCS}}. \tag{A.3}$$

A.3. METEOR

$$F_{\text{mean}} = \frac{(1+\alpha)PR}{R + \alpha P}, \tag{A.4}$$

$$\text{METEOR} = F_{\text{mean}} \cdot (1 - \text{Penalty}). \tag{A.5}$$

A.4. CIDEr

With TF-IDF-weighted n-gram vectors:

$$\mathrm{CIDEr}_n(c, r) = \frac{1}{M} \sum_{i=1}^{M} \frac{\mathbf{g}^n(c) \cdot \mathbf{g}^n(r_i)}{\|\mathbf{g}^n(c)\| \|\mathbf{g}^n(r_i)\|}. \tag{A.6}$$

B. Model Variant Name Mapping

This appendix maps the short model names used in Chapters 3, 4, and 5 to the raw run IDs in the experiment folders.

B.1. Main Retraining Set

B.2. Text-Policy Set (Legacy)

B.3. Legacy Aliases and Implementation-Only Variant

- `medgemma_vlm_8_tokens_full` is an older naming alias of the Baseline-8T branch in legacy result exports.
- `lora_with_vis_tokens_pos_embed` is an older naming alias of the Prefix-Stable-8T branch in legacy result exports.
- `medgemma_lora_vis_token` corresponds to a single-token interface prototype (Baseline-1T) kept for implementation comparison; it is not included in the standardized retraining metric tables.

Table B.1.: Display-name mapping for the main retraining result set (`results_retrain`).

Display Name	Raw Run ID	Axis	Main Difference
Baseline-8T	`medical_vlm_8_tokens_full`	Token/bridge	8 tokens per organ baseline
Prefix-Stable-8T	`medgemma_lora_vis_token_pos_embed`	Token/bridge	Visual positional embeddings and sentinel-wrapped visual prefix
MaxPool-8T	`medical_vlm_8_tokens_full_maxpool`	Token/bridge	Max-pooling mask downsampling before token-grid attention
Perceiver-Bridge	`perceiver_resampler`	Architecture	Perceiver-style stacked self/cross attention for visual aggregation
Multiscale-FPN	`multiscale_vit_fpn`	Architecture	Multiscale fusion of intermediate ViT features
CNN-Align-v3	`medgemma_architecture_v3`	Architecture	CNN stem and alignment regularization
Align-v1	`medgemma_alignment_v1`	Architecture	Alignment objective variant without full v3 stack
Hard-Mining	`hard_example_mining`	Training policy	Weighted sampler emphasizing difficult samples
Curriculum-2Phase	`curriculum_learning`	Training policy	Pathology-first phase followed by full-data phase
Undersample-DefaultText	`lora_with_vis_tokens_pos_embed_undersampling`	Training policy	Reduced keep probability for default empty-organ text
Weighted-Organ-Loss	`lora_with_vis_tokens_pos_embed_weight_loss`	Training policy	Organ-wise and label-type loss weighting

Table B.2.: Display-name mapping for the legacy text-policy runs (`results`).

Display Name	Raw Run ID	Comparability Note
v3-Resized-DefaultText	`medgemma_architecture_v3_resized`	Baseline for strict default-vs-synonym comparison
v3-Resized-SynonymText	`medgemma_architecture_v3_resized_synonyms`	Strict pair with v3-Resized-DefaultText

Abbreviations

List of Figures

3.1. Organ decomposition and generation pipeline. A free-text radiology report is decomposed into organ-keyed targets, aligned with CT volume and organ masks, and used to train organ-conditioned report generation. Adapted from fVLM [1] with modifications for organ-level supervision and analysis. 15
3.2. Organ visibility distribution across CT-RATE, measured as the fraction of studies with a non-empty organ mask. 17
3.3. Organ-level report presence distribution across CT-RATE, measured from decomposed report targets. 17
3.4. Overview of the proposed organ-aware medical VLM. (a) ROI-aware visual token extraction: organ masks are pooled to the ViT patch grid and used as attention bias in masked cross-attention with learnable organ queries, producing organ-specific visual tokens that are projected to the LLM embedding space and enriched with positional embeddings and layer normalization. (b) Organ-wise report generation: the visual tokens are inserted into a multimodal prefix together with an instruction prompt and decoded by MedGemma-4B-it with LoRA adapters to generate organ-level findings, which are aggregated into the final report. Adapted from fVLM [1] with modifications for organ-level supervision and analysis. 18

4.1. Case Study A: baseline vs best model cross-attention overlays in a thoracic-dominant exam. 32
4.2. Case Study B: behavior under mixed thoracic and upper-abdominal findings. 33
4.3. Case Study C: qualitative comparison of attention behavior across architecture variants. 34

List of Tables

2.1. Performance benchmarking of recent 3D volumetric foundation models for radiology report generation on CT-RATE within the CT-3DRRG benchmark. All numeric values are taken directly from Table 2 of Argus [45]. CT2Rep, RadFM, and M3D rows are Argus re-evaluations of the original methods [43, 47, 44] in the normal-resolution setting $(256 \times 256 \times 64)$, while Argus rows are reported in the high-resolution setting $(512 \times 512 \times 256)$. 12

3.1. Organ-to-segmentation-ID mapping used for binary mask construction. 16
3.2. Model variants and principal design differences. 20

4.1. CT-RATE dataset-level statistics used in this thesis. 24
4.2. Per-organ coverage among matched validation samples (GLOBAL = 1563). 25
4.3. Shared optimization defaults across main training runs. 26
4.4. Ablation axes and evaluated variants. 26
4.5. Core MedGemma ablations on the CT-RATE validation set. 28
4.6. Full MedGemma training matrix. 28
4.7. Delta against Baseline-8T. Positive values are better. 29
4.8. Text-policy comparison in the v3-resized branch. 30
4.9. Decoder comparison on CT-RATE under a shared organ-attention frontend. 31
4.10. Decoder run diagnostics from official generated report files. 31
4.11. Decoder diversity diagnostics from normalized generated reports. . . . 31
4.12. Best MedGemma variant: selected organ-level metrics. 32

B.1. Display-name mapping for the main retraining result set (`results_retrain`). 45
B.2. Display-name mapping for the legacy text-policy runs (`results`). 45

Bibliography

[1] Z. Shui, J. Zhang, W. Cao, S. Wang, R. Guo, L. Lu, L. Yang, X. Ye, T. Liang, Q. Zhang, and L. Zhang. "Large-scale and Fine-grained Vision-language Pre-training for Enhanced CT Image Understanding." In: 2025. arXiv: 2501.14548 [cs.CV].

[2] J. Devlin, M.-W. Chang, K. Lee, and K. Toutanova. "BERT: Pre-training of Deep Bidirectional Transformers for Language Understanding." In: *Proceedings of the 2019 Conference of the North American Chapter of the Association for Computational Linguistics: Human Language Technologies, Volume 1 (Long and Short Papers)*. Ed. by J. Burstein, C. Doran, and T. Solorio. Minneapolis, Minnesota: Association for Computational Linguistics, June 2019, pp. 4171–4186. DOI: 10.18653/v1/N19-1423.

[3] I. E. Hamamci, S. Er, C. Wang, F. Almas, A. G. Simsek, S. N. Esirgun, I. Dogan, O. F. Durugol, B. Hou, S. Shit, W. Dai, M. Xu, H. Reynaud, M. F. Dasdelen, B. Wittmann, T. Amiranashvili, E. Simsar, M. Simsar, E. B. Erdemir, A. Alanbay, A. Sekuboyina, B. Lafci, A. Kaplan, Z. Lu, M. Polacin, B. Kainz, C. Bluethgen, K. Batmanghelich, M. K. Ozdemir, and B. Menze. *Generalist foundation models from a multimodal dataset for 3D computed tomography*. Feb. 2026. DOI: 10.1038/s41551-025-01599-y.

[4] K. Papineni, S. Roukos, T. Ward, and W.-J. Zhu. "Bleu: a Method for Automatic Evaluation of Machine Translation." In: *Proceedings of the 40th Annual Meeting of the Association for Computational Linguistics*. Ed. by P. Isabelle, E. Charniak, and D. Lin. Philadelphia, Pennsylvania, USA: Association for Computational Linguistics, July 2002, pp. 311–318. DOI: 10.3115/1073083.1073135.

[5] C.-Y. Lin. "ROUGE: A Package for Automatic Evaluation of Summaries." In: *Text Summarization Branches Out*. Barcelona, Spain: Association for Computational Linguistics, July 2004, pp. 74–81.

[6] S. Jain, A. Agrawal, A. Saporta, S. Q. Truong, D. N. Duong, T. Bui, P. Chambon, Y. Zhang, M. P. Lungren, A. Y. Ng, C. P. Langlotz, and P. Rajpurkar. "RadGraph: Extracting Clinical Entities and Relations from Radiology Reports." In: (2021). arXiv: 2106.14463 [cs.CL].

[7] S. Ostmeier, J. Xu, Z. Chen, M. Varma, L. Blankemeier, C. Bluethgen, A. E. Michalson, M. Moseley, C. Langlotz, A. S. Chaudhari, and J.-B. Delbrouck. "GREEN: Generative Radiology Report Evaluation and Error Notation." In: *Findings of the Association for Computational Linguistics: EMNLP 2024*. Ed. by Y. Al-Onaizan, M. Bansal, and Y.-N. Chen. Miami, Florida, USA: Association for Computational Linguistics, Nov. 2024, pp. 374–390. DOI: 10.18653/v1/2024.findings-emnlp.21.

[8] A. Sellergren, S. Kazemzadeh, T. Jaroensri, A. Kiraly, M. Traverse, T. Kohlberger, S. Xu, F. Jamil, C. Hughes, C. Lau, J. Chen, F. Mahvar, L. Yatziv, T. Chen, B. Sterling, S. A. Baby, S. M. Baby, J. Lai, S. Schmidgall, L. Yang, K. Chen, P. Bjornsson, S. Reddy, R. Brush, K. Philbrick, M. Asiedu, I. Mezerreg, H. Hu, H. Yang, R. Tiwari, S. Jansen, P. Singh, Y. Liu, S. Azizi, A. Kamath, J. Ferret, S. Pathak, N. Vieillard, R. Merhej, S. Perrin, T. Matejovicova, A. Ramé, M. Riviere, L. Rouillard, T. Mesnard, G. Cideron, J.-b. Grill, S. Ramos, E. Yvinec, M. Casbon, E. Buchatskaya, J.-B. Alayrac, D. Lepikhin, V. Feinberg, S. Borgeaud, A. Andreev, C. Hardin, R. Dadashi, L. Hussenot, A. Joulin, O. Bachem, Y. Matias, K. Chou, A. Hassidim, K. Goel, C. Farabet, J. Barral, T. Warkentin, J. Shlens, D. Fleet, V. Cotruta, O. Sanseviero, G. Martins, P. Kirk, A. Rao, S. Shetty, D. F. Steiner, C. Kirmizibayrak, R. Pilgrim, D. Golden, and L. Yang. *MedGemma Technical Report*. 2025. arXiv: 2507.05201 [cs.AI].

[9] A. Radford, J. Wu, R. Child, D. Luan, D. Amodei, and I. Sutskever. "Language Models are Unsupervised Multitask Learners." In: (2019).

[10] H. Yuan, Z. Yuan, R. Gan, J. Zhang, Y. Xie, and S. Yu. "BioBART: Pretraining and Evaluation of A Biomedical Generative Language Model." In: (2022). arXiv: 2204.03905 [cs.CL].

[11] A. Dosovitskiy, L. Beyer, A. Kolesnikov, D. Weissenborn, X. Zhai, T. Unterthiner, M. Dehghani, M. Minderer, G. Heigold, S. Gelly, J. Uszkoreit, and N. Houlsby. "An Image is Worth 16x16 Words: Transformers for Image Recognition at Scale." In: 2021. arXiv: 2010.11929 [cs.CV].

[12] Z. Liu, Y. Lin, Y. Cao, H. Hu, Y. Wei, Z. Zhang, S. Lin, and B. Guo. "Swin Transformer: Hierarchical Vision Transformer using Shifted Windows." In: 2021. arXiv: 2103.14030 [cs.CV].

[13] K. He, X. Chen, S. Xie, Y. Li, P. Dollár, and R. Girshick. "Masked Autoencoders Are Scalable Vision Learners." In: 2021. arXiv: 2111.06377 [cs.CV].

[14] M. Oquab, T. Darcet, T. Moutakanni, H. Vo, M. Szafraniec, V. Khalidov, P. Fernandez, D. Haziza, F. Massa, A. El-Nouby, M. Assran, N. Ballas, W. Galuba, R. Howes, P.-Y. Huang, S.-W. Li, I. Misra, M. Rabbat, V. Sharma, G. Synnaeve, H. Xu,

H. Jegou, J. Mairal, P. Labatut, A. Joulin, and P. Bojanowski. "DINOv2: Learning Robust Visual Features without Supervision." In: (2024). arXiv: 2304.07193 [cs.CV].

[15] J. Chen, Y. Lu, Q. Yu, X. Luo, E. Adeli, Y. Wang, L. Lu, A. L. Yuille, and Y. Zhou. "TransUNet: Transformers Make Strong Encoders for Medical Image Segmentation." In: (2021). arXiv: 2102.04306 [cs.CV].

[16] A. Hatamizadeh, Y. Tang, V. Nath, D. Yang, A. Myronenko, B. Landman, H. Roth, and D. Xu. "UNETR: Transformers for 3D Medical Image Segmentation." In: 2021. arXiv: 2103.10504 [eess.IV].

[17] A. Radford, J. W. Kim, C. Hallacy, A. Ramesh, G. Goh, S. Agarwal, G. Sastry, A. Askell, P. Mishkin, J. Clark, G. Krueger, and I. Sutskever. "Learning Transferable Visual Models From Natural Language Supervision." In: 2021. arXiv: 2103.00020 [cs.CV].

[18] X. Zhai, B. Mustafa, A. Kolesnikov, and L. Beyer. "Sigmoid Loss for Language Image Pre-Training." In: (2023). arXiv: 2303.15343 [cs.CV].

[19] J. Li, D. Li, C. Xiong, and S. Hoi. "BLIP: Bootstrapping Language-Image Pre-training for Unified Vision-Language Understanding and Generation." In: 2022. arXiv: 2201.12086 [cs.CV].

[20] J. Li, D. Li, S. Savarese, and S. Hoi. "BLIP-2: Bootstrapping Language-Image Pre-training with Frozen Image Encoders and Large Language Models." In: 2023. arXiv: 2301.12597 [cs.CV].

[21] J.-B. Alayrac, J. Donahue, P. Luc, A. Miech, I. Barr, Y. Hasson, K. Lenc, A. Mensch, K. Millican, M. Reynolds, R. Ring, E. Rutherford, S. Cabi, T. Han, Z. Gong, S. Samangooei, M. Monteiro, J. Menick, S. Borgeaud, A. Brock, A. Nematzadeh, S. Sharifzadeh, M. Binkowski, R. Barreira, O. Vinyals, A. Zisserman, and K. Simonyan. "Flamingo: a Visual Language Model for Few-Shot Learning." In: (2022). arXiv: 2204.14198 [cs.CV].

[22] H. Liu, C. Li, Q. Wu, and Y. J. Lee. "Visual Instruction Tuning." In: 2023. arXiv: 2304.08485 [cs.CV].

[23] Z. Chen, J. Wu, W. Wang, W. Su, G. Chen, S. Xing, M. Zhong, Q. Zhang, X. Zhu, L. Lu, B. Li, P. Luo, T. Lu, Y. Qiao, and J. Dai. "InternVL: Scaling up Vision Foundation Models and Aligning for Generic Visual-Linguistic Tasks." In: (2024). arXiv: 2312.14238 [cs.CV].

[24] M. Deitke, C. Clark, S. Lee, R. Tripathi, Y. Yang, J. S. Park, M. Salehi, N. Muennighoff, K. Lo, L. Soldaini, J. Lu, T. Anderson, E. Bransom, K. Ehsani, H. Ngo, Y. Chen, A. Patel, M. Yatskar, C. Callison-Burch, A. Head, R. Hendrix, F. Bastani, E. VanderBilt, N. Lambert, Y. Chou, A. Chheda, J. Sparks, S. Skjonsberg, M. Schmitz, A. Sarnat, B. Bischoff, P. Walsh, C. Newell, P. Wolters, T. Gupta, K.-H. Zeng, J. Borchardt, D. Groeneveld, C. Nam, S. Lebrecht, C. Wittlif, C. Schoenick, O. Michel, R. Krishna, L. Weihs, N. A. Smith, H. Hajishirzi, R. Girshick, A. Farhadi, and A. Kembhavi. "Molmo and PixMo: Open Weights and Open Data for State-of-the-Art Vision-Language Models." In: (2024). arXiv: 2409.17146 [cs.CV].

[25] S. Zhang, Y. Xu, N. Usuyama, H. Xu, J. Bagga, R. Tinn, S. Preston, R. Rao, M. Wei, N. Valluri, C. Wong, A. Tupini, Y. Wang, M. Mazzola, S. Shukla, L. Liden, J. Gao, A. Crabtree, B. Piening, C. Bifulco, M. P. Lungren, T. Naumann, S. Wang, and H. Poon. "BiomedCLIP: a multimodal biomedical foundation model pretrained from fifteen million scientific image-text pairs." In: (2025). arXiv: 2303.00915 [cs.CV].

[26] X. Wang, G. Figueredo, R. Li, W. E. Zhang, W. Chen, and X. Chen. *A Survey of Deep Learning-based Radiology Report Generation Using Multimodal Data*. 2025. arXiv: 2405.12833 [cs.CV].

[27] Z. Chen, M. Varma, J. Xu, M. Paschali, D. V. Veen, A. Johnston, A. Youssef, L. Blankemeier, C. Bluethgen, S. Altmayer, J. M. J. Valanarasu, M. S. E. Muneer, E. P. Reis, J. P. Cohen, C. Olsen, T. M. Abraham, E. B. Tsai, C. F. Beaulieu, J. Jitsev, S. Gatidis, J.-B. Delbrouck, A. S. Chaudhari, and C. P. Langlotz. *A Vision-Language Foundation Model to Enhance Efficiency of Chest X-ray Interpretation*. 2024. arXiv: 2401.12208 [cs.CV].

[28] S. Bannur, K. Bouzid, D. C. Castro, A. Schwaighofer, A. Thieme, S. Bond-Taylor, M. Ilse, F. Pérez-García, V. Salvatelli, H. Sharma, F. Meissen, M. Ranjit, S. Srivastav, J. Gong, N. C. F. Codella, F. Falck, O. Oktay, M. P. Lungren, M. T. Wetscherek, J. Alvarez-Valle, and S. L. Hyland. *MAIRA-2: Grounded Radiology Report Generation*. 2024. arXiv: 2406.04449 [cs.CL].

[29] G. Team, T. Mesnard, C. Hardin, et al. "Gemma: Open Models Based on Gemini Research and Technology." In: (2024). arXiv: 2403.08295 [cs.CL].

[30] M. Lewis, Y. Liu, N. Goyal, M. Ghazvininejad, A. Mohamed, O. Levy, V. Stoyanov, and L. Zettlemoyer. "BART: Denoising Sequence-to-Sequence Pre-training for Natural Language Generation, Translation, and Comprehension." In: (2019). arXiv: 1910.13461 [cs.CL].

[31] H. Touvron, T. Lavril, G. Izacard, X. Martinet, M.-A. Lachaux, T. Lacroix, B. Rozière, N. Goyal, E. Hambro, F. Azhar, A. Rodriguez, A. Joulin, E. Grave, and G. Lample. "LLaMA: Open and Efficient Foundation Language Models." In: (2023). arXiv: 2302.13971 [cs.CL].

[32] N. Houlsby, A. Giurgiu, S. Jastrzebski, B. Morrone, Q. de Laroussilhe, A. Gesmundo, M. Attariyan, and S. Gelly. *Parameter-Efficient Transfer Learning for NLP*. 2019. arXiv: 1902.00751 [cs.LG].

[33] X. L. Li and P. Liang. "Prefix-Tuning: Optimizing Continuous Prompts for Generation." In: (2021). arXiv: 2101.00190 [cs.CL].

[34] E. J. Hu, Y. Shen, P. Wallis, Z. Allen-Zhu, Y. Li, S. Wang, L. Wang, and W. Chen. "LoRA: Low-Rank Adaptation of Large Language Models." In: (2021). arXiv: 2106.09685 [cs.CL].

[35] T. Dettmers, A. Pagnoni, A. Holtzman, and L. Zettlemoyer. "QLoRA: Efficient Finetuning of Quantized LLMs." In: (2023). arXiv: 2305.14314 [cs.LG].

[36] B. Jing, P. Xie, and E. Xing. "On the Automatic Generation of Medical Imaging Reports." In: (2018), pp. 2577–2586. DOI: 10.18653/v1/p18-1240.

[37] Z. Chen, Y. Song, T.-H. Chang, and X. Wan. "Generating Radiology Reports via Memory-driven Transformer." In: 2022. arXiv: 2010.16056 [cs.CL].

[38] Z. Chen, Y. Shen, Y. Song, and X. Wan. "Cross-modal Memory Networks for Radiology Report Generation." In: 2022. arXiv: 2204.13258 [cs.CL].

[39] A. Nicolson, J. Dowling, and B. Koopman. "Improving chest X-ray report generation by leveraging warm starting." In: *Artificial Intelligence in Medicine* 144 (Oct. 2023), p. 102633. ISSN: 0933-3657. DOI: 10.1016/j.artmed.2023.102633.

[40] J. Irvin, P. Rajpurkar, M. Ko, Y. Yu, S. Ciurea-Ilcus, C. Chute, H. Marklund, B. Haghgoo, R. Ball, K. Shpanskaya, J. Seekins, D. A. Mong, S. S. Halabi, J. K. Sandberg, R. Jones, D. B. Larson, C. P. Langlotz, B. N. Patel, M. P. Lungren, and A. Y. Ng. "CheXpert: A Large Chest Radiograph Dataset with Uncertainty Labels and Expert Comparison." In: (2019). arXiv: 1901.07031 [cs.CV].

[41] A. Smit, S. Jain, P. Rajpurkar, A. Pareek, A. Y. Ng, and M. P. Lungren. *CheXbert: Combining Automatic Labelers and Expert Annotations for Accurate Radiology Report Labeling Using BERT*. 2020. arXiv: 2004.09167 [cs.CL].

[42] Z. Wang, L. Liu, L. Wang, and L. Zhou. "R2GenGPT: Radiology Report Generation with Frozen LLMs." In: (2023). arXiv: 2309.09812 [cs.CV].

[43] I. E. Hamamci, S. Er, and B. Menze. *CT2Rep: Automated Radiology Report Generation for 3D Medical Imaging*. 2024. arXiv: 2403.06801 [eess.IV].

[44] F. Bai, Y. Du, T. Huang, M. Q. .-. Meng, and B. Zhao. *M3D: Advancing 3D Medical Image Analysis with Multi-Modal Large Language Models*. 2024. arXiv: 2404.00578 [cs.CV].

[45] C. Liu, Z. Wan, Y. Wang, H. Shen, H. Wang, K. Zheng, M. Zhang, and R. Arcucci. *Argus: Benchmarking and Enhancing Vision-Language Models for 3D Radiology Report Generation*. 2025. arXiv: 2406.07146 [cs.CV].

[46] Y. Xin, G. C. Ates, K. Gong, and W. Shao. *Med3DVLM: An Efficient Vision-Language Model for 3D Medical Image Analysis*. 2025. arXiv: 2503.20047 [cs.CV].

[47] C. Wu, X. Zhang, Y. Zhang, Y. Wang, and W. Xie. *Towards Generalist Foundation Model for Radiology by Leveraging Web-scale 2D&3D Medical Data*. 2023. arXiv: 2308.02463 [cs.CV].

[48] I. E. Hamamci, S. Er, S. Shit, H. Reynaud, D. Yang, P. Guo, M. Edgar, D. Xu, B. Kainz, and B. Menze. *Better Tokens for Better 3D: Advancing Vision-Language Modeling in 3D Medical Imaging*. 2025. arXiv: 2510.20639 [cs.CV].

[49] H. Cao, Y. Wang, J. Chen, D. Jiang, X. Zhang, Q. Tian, and M. Wang. "Swin-Unet: Unet-like Pure Transformer for Medical Image Segmentation." In: 2021. arXiv: 2105.05537 [eess.IV].

[50] H.-Y. Zhou, J. Guo, Y. Zhang, L. Yu, L. Wang, and Y. Yu. "nnFormer: Interleaved Transformer for Volumetric Segmentation." In: (2022). arXiv: 2109.03201 [cs.CV].

[51] J. Wasserthal, H.-C. Breit, M. T. Meyer, M. Pradella, D. Hinck, A. W. Sauter, T. Heye, D. T. Boll, J. Cyriac, S. Yang, M. Bach, and M. Segeroth. "TotalSegmentator: Robust Segmentation of 104 Anatomic Structures in CT Images." In: *Radiology: Artificial Intelligence* 5.5 (Sept. 2023). ISSN: 2638-6100. DOI: 10.1148/ryai.230024.

[52] A. Jaegle, F. Gimeno, A. Brock, A. Zisserman, O. Vinyals, and J. Carreira. "Perceiver: General Perception with Iterative Attention." In: 2021. arXiv: 2103.03206 [cs.CV].

[53] T. Gu, D. Liu, Z. Li, and W. Cai. "Complex Organ Mask Guided Radiology Report Generation." In: *Proceedings of the IEEE/CVF Winter Conference on Applications of Computer Vision (WACV)*. Jan. 2024, pp. 7995–8004.

[54] S. Li, P. Qiao, L. Wang, M. Ning, L. Yuan, Y. Zheng, and J. Chen. "An Organ-Aware Diagnosis Framework for Radiology Report Generation." In: *IEEE Transactions on Medical Imaging* 43.12 (2024), pp. 4253–4265. DOI: 10.1109/TMI.2024.3421599.

[55] H. Su, B. Liu, X. Zhu, X. Lu, N. Wu, and D. Hu. "TGMT: A Terminology-Guided Multi-Task Approach for Lung Cancer CT Report Generation." In: *2024 46th Annual International Conference of the IEEE Engineering in Medicine and Biology Society (EMBC)*. 2024, pp. 1–5. DOI: 10.1109/EMBC53108.2024.10781518.

[56] W. Kwon, Z. Li, S. Zhuang, Y. Sheng, L. Zheng, C. H. Yu, J. E. Gonzalez, H. Zhang, and I. Stoica. "Efficient Memory Management for Large Language Model Serving with PagedAttention." In: 2023. arXiv: 2309.06180 [cs.LG].

[57] J. Lin, J. Tang, H. Tang, S. Yang, W.-M. Chen, W.-C. Wang, G. Xiao, X. Dang, C. Gan, and S. Han. "AWQ: Activation-aware Weight Quantization for LLM Compression and Acceleration." In: 2024. arXiv: 2306.00978 [cs.CL].

[58] J. Xu, X. Zhang, J. Abderezaei, J. Bauml, R. Boodoo, F. Haghighi, A. Ganjizadeh, E. Brattain, D. Van Veen, Z. Meng, D. W. Eyre, and J.-B. Delbrouck. "RadEval: A framework for radiology text evaluation." In: *Proceedings of the 2025 Conference on Empirical Methods in Natural Language Processing: System Demonstrations*. Ed. by I. Habernal, P. Schulam, and J. Tiedemann. Suzhou, China: Association for Computational Linguistics, Nov. 2025, pp. 546–557. ISBN: 979-8-89176-334-0. DOI: 10.18653/v1/2025.emnlp-demos.40.

[59] S. Banerjee and A. Lavie. "METEOR: An Automatic Metric for MT Evaluation with Improved Correlation with Human Judgments." In: *Proceedings of the ACL Workshop on Intrinsic and Extrinsic Evaluation Measures for Machine Translation and/or Summarization*. Ed. by J. Goldstein, A. Lavie, C.-Y. Lin, and C. Voss. Ann Arbor, Michigan: Association for Computational Linguistics, June 2005, pp. 65–72.

[60] R. Vedantam, C. Lawrence Zitnick, and D. Parikh. "CIDEr: Consensus-Based Image Description Evaluation." In: *Proceedings of the IEEE Conference on Computer Vision and Pattern Recognition (CVPR)*. June 2015.

[61] T. Zhang, V. Kishore, F. Wu, K. Q. Weinberger, and Y. Artzi. "BERTScore: Evaluating Text Generation with BERT." In: (2020). arXiv: 1904.09675 [cs.CL].

[62] F. Yu, M. Endo, R. Krishnan, I. Pan, A. Tsai, E. P. Reis, E. K. U. N. Fonseca, H. M. H. Lee, Z. S. H. Abad, A. Y. Ng, C. P. Langlotz, V. K. Venugopal, and P. Rajpurkar. "Evaluating progress in automatic chest X-ray radiology report generation." In: *Patterns* 4.9 (2026/03/10 2023).