SCHOOL OF COMPUTATION, INFORMATION AND TECHNOLOGY - INFORMATICS

TECHNISCHE UNIVERSITÄT MÜNCHEN

Master's Thesis in Informatics

Vision-Language Foundation Models for Multi-Modal Medical Data

Muhammed Göktepe

SCHOOL OF COMPUTATION, INFORMATION AND TECHNOLOGY - INFORMATICS

TECHNISCHE UNIVERSITÄT MÜNCHEN

Master's Thesis in Informatics

Vision-Language Foundation Models for Multi-Modal Medical Data

Vision-Language-Foundation-Modelle für Multimodale Medizinische Daten

Author:	Muhammed Göktepe
Examiner:	Prof. Dr. Christian Wachinger
Supervisor:	Fabian Bongratz, Tom Nuno Wolf

Submission Date:	16.03.2026
Keywords:	3D Chest CT; Radiology Report Generation; Vision-Language Foundation Models; Organ-aware Token Interfaces; Decoder-family Comparison; Parameter-Efficient Fine-Tuning

I confirm that this master's thesis is my own work and I have documented all sources and material used.

Munich, 16.03.2026 Muhammed Göktepe

Acknowledgments

I would like to express my sincere gratitude to my supervisors, Fabian Bongratz and Tom Nuno Wolf, for their guidance, support, and valuable feedback throughout this thesis. Their insights and encouragement were essential to the development of this work. I am also deeply grateful to my family for their constant support, patience, and encouragement throughout my studies. Their trust and belief in me have always been my greatest source of strength. Finally, I would like to thank all my friends who have provided support and motivation during this journey.

Abstract

This thesis investigates organ-aware radiology report generation from 3D chest CT using vision-language foundation models. The main challenge is to preserve clinically relevant anatomical information while keeping the visual token interface compact and stable for language decoding.

We propose an end-to-end pipeline that combines volumetric CT preprocessing with organ-mask supervision, LLM-based decomposition of reports into organ-level targets, organ-conditioned visual token extraction from a 3D vision encoder, and decoder adaptation with parameter-efficient fine-tuning. The framework is designed for protocol-matched comparison across MedGemma, GPT-2, BioBART, and a fVLM-aligned BERT-base baseline.

Experiments on CT-RATE show that interface calibration and token budget have higher impact than added architectural complexity. In controlled ablations, the stable-prefix 8-token MedGemma variant (Base-8T) outperforms the matched 1-token variant (Base-1T) on GREEN, RadGraph, and most lexical-semantic metrics, but not on RadCliQ. In decoder-family comparison under the same evaluation protocol, the finalized rows show a mixed ranking: the fVLM-aligned BERT-base baseline is strongest on GREEN, RadGraph, ROUGE-L, and BERTScore, while GPT-2 leads overlap-style metrics such as BLEU-4 and CIDEr, BioBART is strongest on RadCliQ, and MedGemma shows substantially lower template reuse and higher output diversity.

Overall, the thesis provides a reproducible organ-aware 3D report generation framework, code-grounded ablation evidence, and a complete protocol-matched cross-decoder comparison.

Contents

Acknowledgments **iii**

Abstract **iv**

1. Introduction **1**
1.1. Problem Statement 1
1.2. Thesis Formulation 2
1.3. Contributions 2
1.4. Thesis Outline 3

2. Related Work **4**
2.1. Vision Transformers 4
2.1.1. Architectural Evolutions: Hierarchical and Self-Supervised ViTs 4
2.1.2. Adaptation to 3D Medical Volumes 5
2.2. Vision–Language Models 5
2.2.1. Contrastive Alignment and the CLIP Paradigm 5
2.2.2. Generative VLMs and Open-Weight Ecosystems 6
2.2.3. Medical Vision-Language Models 7
2.3. Decoders and Parameter-Efficient Fine-Tuning 8
2.3.1. Encoder-Decoder Architectures vs. Causal Modeling 8
2.3.2. Parameter-Efficient Fine-Tuning (PEFT) 9
2.4. Radiology Report Generation 9
2.4.1. Traditional and Early Transformer Approaches 10
2.4.2. The Evaluation Paradigm: From N-Grams to Clinical Efficacy . . 10
2.4.3. 2D Radiology Foundation Models 10
2.4.4. 3D Volumetric Report Generation 11
2.5. 3D Medical Image Segmentation and Organ-Guided Attention 13
2.5.1. Volumetric Segmentation Frameworks 13
2.5.2. Organ-Guided Attention and Clinical Grounding 13

3. Methodology **15**
3.1. Pipeline Overview 15

3.2. Data and Targets . . . 15
3.2.1. Volume and Mask Preprocessing . . . 15
3.2.2. Target Organ Set and Segmentation Mapping . . . 16
3.2.3. Report Decomposition Targets . . . 16
3.2.4. Organ Visibility and Report Presence Distribution . . . 17
3.3. Model Architecture . . . 18
3.3.1. 3D Visual Backbone . . . 18
3.3.2. Organ Queries and Masked Cross-Attention . . . 20
3.3.3. Token Granularity and Empty-Organ Safety . . . 20
3.3.4. Projection, Stabilization, and Sentinel Wrapping . . . 20
3.4. Variants Evaluated . . . 21
3.4.1. Controlled Comparison Groups . . . 22
3.5. Decoder Adaptation and Training Objective . . . 22
3.5.1. Decoder-Specific Adaptation . . . 22
3.5.2. Weighted Language Modeling Loss . . . 23
3.5.3. Optional Alignment Objective . . . 23
3.6. Optimization and Inference . . . 23
3.6.1. Shared Optimization Settings . . . 23
3.6.2. Training-Strategy Variants . . . 23
3.6.3. Organ-Wise Inference and Report Assembly . . . 24
3.7. Reproducibility Notes . . . 24

4. Experiments and Results **25**
4.1. Experimental Setup . . . 25
4.1.1. Objectives and Research Questions . . . 25
4.1.2. Dataset and Preprocessing . . . 25
4.1.3. Organ Coverage Profile . . . 26
4.1.4. Implementation and Optimization Defaults . . . 26
4.1.5. Ablation Axes . . . 26
4.2. Evaluation Protocol . . . 28
4.2.1. Metric Families . . . 28
4.2.2. Metric Interpretation Policy . . . 28
4.2.3. Evaluation Reproducibility and Result Provenance . . . 28
4.2.4. Qualitative Protocol for Attention Maps . . . 29
4.3. Results by Research Question . . . 29
4.3.1. Main MedGemma Result Tables . . . 29
4.3.2. RQ1: Token-Interface Bundle . . . 29
4.3.3. RQ2: Architecture Complexity . . . 30
4.3.4. RQ3: Training Strategy . . . 31

4.3.5. Text Policy Check: Default vs Synonym Templates 31
4.3.6. RQ4: Decoder Family Comparison 32
4.4. Fine-Grained Analyses 34
4.4.1. Organ-Level Analysis 34
4.4.2. Cross-Attention Activation Case Studies 34
4.4.3. fVLM-Aligned Baseline on CT-RATE 34
4.5. Chapter Summary and Minimal Limitations Note 36

5. Discussion **37**
5.1. Why Interface and Token Count Dominated 37
5.2. Metric Disagreement and Interpretation 38
5.3. Generalization and Organ Coverage 39
5.4. Decoder Family Axis 39
5.5. Relation to Prior Paradigms 39
5.6. Validity and Limits 40
5.7. Practical Implications and Synthesis 40

6. Conclusion and Future Work **41**
6.1. Conclusion 41
6.2. Take-Home Messages 42
6.3. Future Work 42
6.3.1. Track 1: Strengthen the Current Thesis Axis 42
6.3.2. Track 2: Improve Model Robustness and Efficiency 43
6.3.3. Track 3: Strengthen Clinical Validity 43
6.4. Final Remark 43

Abbreviations **44**

List of Figures **45**

List of Tables **46**

Bibliography **48**

A. Metric Equations **56**
A.1. BLEU 56
A.2. ROUGE-L 56
A.3. METEOR 56
A.4. CIDEr 57

B. Model Variant Name Mapping **58**
B.1. Main Training Set 58
B.2. Text-Policy Set (Legacy) 58
B.3. Legacy Aliases and Implementation-Only Variant 58
B.4. Component Presence Matrix (Training Set Only) 58
B.5. Validation Split Coverage Alignment 58

1. Introduction

Deep learning has become an important tool across science and engineering, with one of its strongest impacts in computer vision. Today, models perform very well on tasks such as image classification, object detection, and segmentation [1]. These results, however, usually depend on large labeled datasets. In medical imaging, building comprehensive labeled datasets remains difficult, especially in 3D settings, and this has limited progress in several downstream tasks [2].

Within medical imaging, radiology report generation is a high-impact task because reports are the main communication channel between image analysis and clinical decision-making [3]. A useful model must do more than produce fluent text. It must describe findings accurately, preserve anatomical context, and avoid clinically misleading statements [4]. This makes the problem closer to structured clinical reasoning than to generic image captioning.

1.1. Problem Statement

Traditional encoder-decoder approaches for radiology report generation were limited by imperfect image-text alignment and by relatively generic language-generation components [5]. While early 2D Vision-Language Models (VLMs) leveraging attention mechanisms improved the alignment between image regions and text tokens [6], they were limited in capturing full volumetric context. In clinical practice, critical findings such as lesion shape, spatial extent, and inter-slice continuity often depend on volumetric context [7].

Applying modern VLM architectures directly to 3D medical volumes, like CT scans, introduces substantial computational bottlenecks [8, 9]. Volumetric inputs drastically increase visual token counts, which makes global attention expensive and motivates bridging architectures such as perceptual resamplers or Q-Formers to compress dense visual tokens before decoding [10, 11]. Furthermore, while the field of generative AI has seen an expansion of capable multi-billion parameter foundation models, recent 3D report-generation studies suggest that both vision-side representation quality and decoder design matter, but their relative contribution remains unclear [12].

1.2. Thesis Formulation

This thesis builds on fVLM [13] and focuses on radiology report generation from 3D chest CT. Rather than introducing a new vision backbone, we reuse the pretrained fVLM vision encoder and study how to turn its visual features into clinically reasonable reports.

Our main objective is to improve report quality through design choices around this encoder. Since fVLM does not release report-generation weights and provides only limited detail about the decoder-side setup, we construct a reproducible internal reference branch guided by the published description [13]. Concretely, this branch uses a BERT-base decoder [14]. We train this branch with language modeling loss on CT-RATE under our internal protocol (Chapter 3). We then evaluate additional generation strategies, including organ-conditioned token interfaces and decoder adaptation. Experiments are conducted on the CT-RATE dataset [2], a large-scale public dataset pairing 3D chest CT volumes with free-text radiology reports.

Instead of relying only on text-overlap metrics such as BLEU [15] and ROUGE [16], we also evaluate clinical quality using RadGraph [17] and GREEN [4], the Generative Radiology Report Evaluation and Error Notation metric. This helps us judge whether the generated reports are clinically useful, not only lexically similar.

Through ablations across decoder architectures, including MedGemma [18], BERT-base [14], GPT-2 [19], and BioBART [20], we analyze which decoder choices and interface designs best convert pretrained 3D visual representations into structured clinical text. More specifically, under a shared protocol, we test whether report quality is more sensitive to frontend/interface design or to decoder family choice.

1.3. Contributions

The main contributions of this thesis are as follows:

1. **fVLM-Based Report Generation Framework**: We build an end-to-end CT report generation pipeline around a pretrained fVLM vision encoder, with a shared organ-aware visual frontend, decoder-side adaptation, and a reproducible BERT-base reference branch.

2. **Systematic Quality-Improvement Study**: We evaluate practical strategies to improve report generation quality, including organ-conditioned token interfaces, decoder choices such as MedGemma, BERT-base, GPT-2, and BioBART, and training ablations under a controlled setup.

3. **Clinical Efficacy Prioritization**: We validate generated results strictly against clinical-factuality metrics such as GREEN and RadGraph to distinguish genuine clinical correctness from superficial overlap-based gains driven by memorized reporting patterns.

1.4. Thesis Outline

The remainder of this thesis is organized as follows. Chapter 2 reviews relevant literature and motivates the design choices used in this work. Chapter 3 describes the end-to-end pipeline and training setup. Chapter 4 presents the experimental results, Chapter 5 analyzes their implications and limitations, and Chapter 6 summarizes the main outcomes and future directions.

2. Related Work

Building on the problem framing in Chapter 1, this chapter reviews prior work that directly motivates our design choices for 3D chest CT report generation. The discussion follows the same technical axis used in this thesis: visual encoding for volumetric data, vision–language modeling, decoder adaptation, report generation and evaluation, and organ-guided anatomical grounding.

2.1. Vision Transformers

The Vision Transformer (ViT) [21] introduced a transformer-first approach to image analysis. It splits an image into fixed-size non-overlapping patches, projects each patch into an embedding, and processes the resulting token sequence with a standard transformer encoder. In contrast to CNNs, ViT does not rely on hard-coded convolutional priors such as local receptive fields or translation invariance. Instead, spatial relations are learned through self-attention. With sufficient large-scale pretraining, this formulation achieved competitive or better performance than strong CNN baselines on standard vision benchmarks.

2.1.1. Architectural Evolutions: Hierarchical and Self-Supervised ViTs

After ViT, transformer variants sought to address its limitations for dense vision tasks and training efficiency. The Swin Transformer [1] introduced hierarchical feature maps and window-based self-attention, with shifted windows across layers to exchange information between local regions. This design lowered computational cost while preserving strong representational capacity. As a result, transformer backbones became more practical for detection and segmentation tasks, which are important in medical imaging.

In parallel, self-supervised learning reduced dependence on expensive annotations. Masked Autoencoders (MAE) [22] use an asymmetric encoder-decoder setup: the encoder processes only visible patches, while a lightweight decoder reconstructs masked content, often with masking ratios around 75%. This strategy learns strong visual representations directly from unlabeled images. DINOv2 [23] further showed that

self-distillation without labels can produce robust and transferable features across many downstream tasks.

2.1.2. Adaptation to 3D Medical Volumes

In medical imaging, transformers are attractive because they capture long-range spatial dependencies that are difficult to model with purely local operators. Early hybrid designs such as TransUNet [24] combined CNN-based local feature extraction with transformer-based global context modeling for 2D segmentation.

Clinical modalities such as CT and MRI are inherently volumetric. Slice-by-slice processing can miss through-plane continuity and weak cross-slice patterns. UNETR [7] addressed this limitation by tokenizing 3D patches and encoding the full volume with a ViT backbone.

The main limitation of direct 3D transformer modeling is computational cost. Attention complexity grows quadratically with token count, while token count in volumetric inputs grows rapidly with spatial resolution. For high-resolution CT, full global self-attention can exceed practical GPU memory budgets. Recent 3D transformer variants address this with windowed or sparse attention, hierarchical processing, and early spatial downsampling to keep training and inference feasible.

2.2. Vision–Language Models

Vision–language models (VLMs) aim to connect visual perception and natural language understanding. These models learn joint representations of images and text, enabling cross-modal tasks such as image captioning, visual question answering (VQA), and multimodal reasoning.

2.2.1. Contrastive Alignment and the CLIP Paradigm

CLIP (Contrastive Language–Image Pre-training) [25] introduced a scalable approach to learning visual representations from natural language supervision. By training independent vision and text encoders to maximize the cosine similarity of matching image–text pairs in a shared embedding space while minimizing the similarity of non-matching pairs, CLIP learns transferable visual concepts. Trained on 400 million image–text pairs curated from the internet, CLIP showed strong zero-shot transfer capability across many downstream visual tasks.

Recent advances refined the CLIP objective. SigLIP (Sigmoid Loss for Language Image Pre-Training) [26] replaces the standard softmax-based contrastive loss with a pairwise sigmoid loss. This change removes the need for global views of all negative

pairs across devices, improves training efficiency and scalability, and can improve representation quality. The contrastive learning paradigm established by CLIP and extended by SigLIP remains a common foundation for aligning vision and language modalities in modern VLMs.

2.2.2. Generative VLMs and Open-Weight Ecosystems

While contrastive models focus on alignment and retrieval, generative VLMs produce natural language outputs explicitly conditioned on visual inputs. BLIP (Bootstrapping Language-Image Pre-training) [27] proposed a unified framework that jointly trains a contrastive alignment objective, an image–text matching classification objective, and a generative language modeling objective. This multi-task design made BLIP effective for both image understanding and text generation.

Building upon this, BLIP-2 [11] introduced a compute-efficient strategy for bridging the modality gap: the Q-Former (Query Transformer). The Q-Former acts as an interface between a frozen image encoder and a frozen large language model. It uses learnable query vectors that cross-attend to dense visual features and extract text-relevant information. In this way, the Q-Former compresses thousands of spatial visual tokens into a fixed, small number of latent tokens; a common setting uses 32 tokens. These compressed tokens are then projected into the text embedding space of the frozen LLM. This architecture showed that strong multimodal behavior is possible without fully unfreezing very large language and vision backbones.

A related strategy for high-density visual signals was adopted by DeepMind's Flamingo [10]. Rather than a Q-Former, Flamingo used a Perceiver Resampler mechanism, which also cross-attends to large input arrays such as high-resolution images or variable-length videos, using a small set of latent learnable query vectors. Flamingo then interleaved these compressed visual tokens with standard text tokens inside a frozen LLM through gated cross-attention layers and reported strong few-shot and in-context reasoning behavior.

LLaVA (Large Language-and-Vision Assistant) [28] simplified these bridging architectures by showing that a Multi-Layer Perceptron (MLP) projection layer can map visual features from a pretrained CLIP encoder into the vocabulary embedding space of an LLM, without using Q-Formers or Resamplers. Through visual instruction tuning on image-text instruction data, LLaVA reported strong multimodal dialogue performance. More recently, open-source initiatives expanded VLM development. Models like InternVL [29] focus on scaling the vision foundation model for broad visual-linguistic tasks, while the Molmo family [30] emphasizes curated open multimodal data and efficient projector architectures.

2.2.3. Medical Vision-Language Models

Adapting VLMs to the medical domain presents additional challenges. Medical images, including high-resolution multi-parametric MRIs and chest X-rays, have different characteristics from natural images in datasets such as COCO and ImageNet. Furthermore, clinical texts use specialized vocabulary, and tolerance for factual error in medical AI is low.

Early attempts to bridge this gap focused on domain-specific contrastive pretraining. BiomedCLIP [31] pretrained a CLIP-style architecture from scratch on 15 million biomedical image–text pairs sourced from PubMed Central articles, showing that in-domain pretraining improves downstream biomedical classification and retrieval compared to generic CLIP models.

For 2D clinical radiology, development has accelerated in recent years [3]. CheXagent [32] was introduced as a clinical foundation model for chest X-ray interpretation, fine-tuned on large corpora of radiology reports to interpret images and answer clinical questions. MAIRA-2 [33] advanced grounded report generation by linking generated assertions to localized bounding boxes in the original X-ray, reducing unsupported findings and improving trustworthiness.

For 3D medical imaging, the challenge is more severe because volumetric data is large and paired text data is limited. Hamamci et al. [2] introduced CT-CLIP, a contrastive learning framework engineered for 3D computed tomography. Trained on the CT-RATE dataset, which pairs 3D volumetric CT scans with corresponding free-text radiology reports, CT-CLIP learns 3D structural visual representations aligned with clinical text. This work is among the earliest large-scale efforts to apply vision–language pretraining directly to volumetric medical data.

Recent 3D CT work has moved beyond early chest-focused contrastive setups. Merlin [34] presents a CT foundation-model pipeline with paired abdominal CT, report text, and EHR signals, and evaluates transfer across several downstream tasks, including retrieval, report generation, and segmentation. HLIP [35] addresses pretraining at larger clinical scale with a hierarchical attention scheme over slices, scans, and studies, showing that lower-curation clinical collections can still be useful for 3D language–image learning.

MedGemma [18] is a family of medical foundation models built on top of the Gemma architecture [36]. It inherits the general-language capabilities of Gemma and adds continued medical pretraining and instruction tuning on biomedical literature, medical exams, and de-identified clinical notes. The instruction-tuned variant MedGemma-4B-IT reports strong zero-shot and few-shot performance on medical reasoning tasks. In this thesis, MedGemma serves as one of the core decoder families evaluated in the report-generation pipeline.

2.3. Decoders and Parameter-Efficient Fine-Tuning

Generating clinically useful radiology reports from visual features requires a strong language decoder. Modern language generation models mainly follow two architectural paradigms: Encoder-Decoder models and Causal Language Models. Understanding the differences between these paradigms is important when selecting a backbone for medical vision-language systems.

2.3.1. Encoder-Decoder Architectures vs. Causal Modeling

Encoder-Decoder models, such as BART (Bidirectional and Auto-Regressive Transformers) [37] and T5, use a bidirectional encoder to process input context and an autoregressive decoder to generate output tokens. Because the encoder attends to both left and right context during prompt processing, these models work well for tasks that require full-context understanding before generation, such as summarization and machine translation. BART is pretrained by corrupting documents with token masking, deletion, and sentence permutation, then optimizing a reconstruction loss.

In the biomedical domain, BioBART [20] adapts this architecture by continually pretraining the baseline BART model on a large corpus of PubMed abstracts. This domain-specific pretraining helps BioBART retain BART's strong generation quality while adapting vocabulary and latent representations to biomedical terminology. In standard vision-language pipelines using Encoder-Decoder backbones, visual embeddings are typically fed directly into the bidirectional encoder, so the model can form a global contextual representation before autoregressive decoding begins.

Conversely, Causal Language Models (CLMs) use a decoder-only architecture that predicts the next token using only preceding tokens. GPT-2 (Generative Pre-trained Transformer 2) [19] popularized this scalable paradigm and showed that unsupervised next-token prediction on large web corpora can produce coherent zero-shot text generation. The base GPT-2 model has 124M parameters, and its clean architecture makes it a practical baseline for diagnostic report-generation experiments under limited compute.

Unlike bidirectional encoders, causal models process the conditioning prompt autoregressively, including prepended visual tokens used as a soft prompt. This means left and right context are not mixed in a single bidirectional encoding step, but large modern causal models can still capture rich dependencies through scale and training data.

Recent foundation models have scaled the decoder-only paradigm to tens of billions of parameters. The LLaMA family [38] and the Gemma family [36] have shown strong performance in natural language understanding, reasoning, and instruction following. MedGemma [18], including the instruction-tuned MedGemma-4B-IT variant, extends

these capabilities with continued medical pretraining and instruction tuning. In causal VLM architectures, preserving the spatial and semantic quality of the visual token prefix is important because downstream generation depends on this initial visual context.

2.3.2. Parameter-Efficient Fine-Tuning (PEFT)

Adapting massive decoders, especially multi-billion parameter foundation models such as MedGemma, to specialized tasks like organ-specific radiology report generation through full fine-tuning is often computationally prohibitive and can degrade general language behavior. Parameter-efficient fine-tuning (PEFT) methods address this by updating only a small fraction of model parameters while keeping most pretrained weights frozen.

Early PEFT strategies included Adapter modules [39], which introduced small trainable feed-forward bottleneck networks between frozen multi-head attention and feed-forward transformer sub-layers. Another approach, Prefix-Tuning [40], optimizes a sequence of continuous task-specific prompt vectors prepended to transformer layers. While effective in reducing forgetting, these methods alter the network topology and can introduce additional inference latency or reduce available context length.

LoRA (Low-Rank Adaptation) [41] addresses these issues and is now widely adopted in foundation-model fine-tuning. LoRA assumes that required updates to dense weight matrices have low intrinsic rank. It introduces trainable low-rank matrices in parallel with frozen linear layers, most often query and value projections in self-attention. Instead of updating the full matrix $W_0 \in \mathbb{R}^{d \times k}$, LoRA learns smaller matrices $A \in \mathbb{R}^{d \times r}$ and $B \in \mathbb{R}^{r \times k}$ where $r \ll \min(d, k)$, yielding $W_0 + \Delta W = W_0 + BA$. Because BA can be merged into W_0 for deployment, LoRA does not add extra inference latency after merging.

To further reduce training cost, QLoRA [42] combines LoRA with 4-bit Normal Float (NF4) double quantization. In QLoRA, frozen pretrained model weights are stored in 4-bit precision, while only the lightweight trainable LoRA adapter matrices are cast to higher precision such as BFloat16 during backpropagation. This combination substantially reduces VRAM requirements for fine-tuning multi-billion parameter foundation models and enables faster iteration on standard hardware.

2.4. Radiology Report Generation

Automatic radiology report generation aims to produce clinically accurate free-text reports from medical images. This task is more demanding than generic image captioning because generated reports must remain factually correct, cover relevant pathological

findings, explicitly state negative findings when needed, and follow clinical reporting conventions.

2.4.1. Traditional and Early Transformer Approaches

Early approaches to radiology report generation adapted encoder–decoder architectures from natural image captioning. Jing et al. [43] proposed a co-attention mechanism combined with a hierarchical LSTM decoder to generate structured medical reports from chest X-rays. However, these CNN–RNN frameworks often produced generic and repetitive descriptions, and they had difficulty capturing rare or subtle findings under strong data imbalance.

Transformer-based methods later improved report quality by tracking long-range context more effectively. Chen et al. [5] introduced a memory-driven transformer with a relational memory module to retain key clinical information during autoregressive generation, which improved coherence in longer reports. In follow-up work, Chen et al. [6] proposed cross-modal memory networks with separate but interacting memory banks for visual and textual features, enabling stronger cross-modal reasoning. Nicolson et al. [44] further showed that warm-starting both the vision encoder from sources such as ImageNet or the CheXpert dataset [45] and the language decoder from models such as clinical BERT can substantially improve chest X-ray report generation compared with training from scratch.

2.4.2. The Evaluation Paradigm: From N-Grams to Clinical Efficacy

Early report-generation studies relied heavily on lexical overlap metrics such as BLEU, ROUGE, and METEOR. In medical reporting, lexical overlap alone is insufficient because clinically meaningful errors can occur with small wording changes. The field therefore shifted toward clinically grounded metrics such as CheXbert [46], RadGraph [17], and GREEN [4], which better reflect factual and relational correctness. In this thesis, the high-level motivation is introduced here, while the operational metric interpretation policy is defined in Section 4.2.2.

2.4.3. 2D Radiology Foundation Models

As the field moved toward foundation models, researchers began adapting large frozen language models as report decoders. R2GenGPT [47] showed that combining a frozen LLM with a trainable visual encoder and a lightweight projection layer can generate radiology reports and achieve competitive results on common natural language generation and clinical efficacy metrics. This setup benefits from the language knowledge in pretrained LLMs while keeping multimodal training costs manageable.

Recently, foundation models tailored for 2D X-ray interpretation have emerged. CheXagent [32] is a clinical foundation model for chest X-rays. By fine-tuning a large VLM on radiology reports and visual question-answering pairs, CheXagent reported strong performance on both report generation and interactive clinical question-answering tasks.

At the same time, the architectural focus shifted from linguistic fluency toward clinical grounding. MAIRA-2 [33] introduced grounded radiology report generation with localized grounding of reported findings in the original X-ray. This grounding reduced unsupported findings and addressed an important safety requirement for medical deployment.

2.4.4. 3D Volumetric Report Generation

While 2D X-ray interpretation has matured rapidly, 3D volumetric report generation from CT and MRI scans remains an open and challenging frontier. The shift from 2D to 3D sharply increases computational complexity in visual token processing. In addition, before the release of CT-RATE [2], paired 3D volumes and free-text reports were scarce.

The release of CT-RATE spurred the rapid development of several pioneering 3D multimodal foundation models:

- **CT2Rep** [8]: As one of the earliest works using CT-RATE, CT2Rep showed that automated report generation for 3D medical imaging is feasible when 3D visual tokens are projected into a suitable language decoder.
- **M3D** [48]: M3D proposed strategies to compress volumetric data into spatial tokens more efficiently, enabling LLM-based processing of full CT studies under context-length constraints.
- **Argus** [12]: Argus presented benchmarking and model-improvement strategies for 3D radiology VLMs, from 3B-scale models to 70B-scale models, and reported that larger language models tend to improve clinical efficacy metrics such as GREEN.
- **Med3DVLM** [49] and **RadFM** [50]: Both models introduced unified 3D vision-language frameworks that emphasize cross-modal alignment between volumetric voxels and clinical text.

Recent work also emphasized fine-grained anatomical supervision for CT understanding. fVLM [13] introduced large-scale and fine-grained vision-language pretraining for CT and reported strong gains on report-generation benchmarks. Its organ-aware

supervision and decomposition perspective directly motivates the organ-guided decomposition strategy used in this thesis.

Beyond strictly comparable CT-RATE leaderboard settings, Merlin [34] also explores anatomy-adapted report drafting inside a multitask CT foundation-model framework, supporting the trend toward structured generation. SimCroP [51] focuses on chest CT representation learning rather than direct report generation, but its coarse-to-fine alignment strategy is still relevant here because clinically important findings are often spatially sparse and depend on precise local region–text grounding.

A key challenge across these works is token compression. A raw 3D CT volume contains far more information than a 2D image, and naive patch extraction can produce tens of thousands of tokens that overwhelm the LLM decoder. Recent evidence [9] shows that tokenization design is a primary performance driver in 3D VLMs: the paper highlights limitations of slice-wise tokenization and reports gains from compact volumetric tokens trained with a curriculum that includes local reconstruction, overlapping-window tiling, and long-context refinement.

Table 2.1.: Performance benchmarking of recent 3D volumetric foundation models for radiology report generation on CT-RATE within the CT-3DRRG benchmark. All numeric values are taken directly from Table 2 of Argus [12]. CT2Rep, RadFM, and M3D rows are Argus re-evaluations of the original methods [8, 50, 48] in the normal-resolution setting $(256 \times 256 \times 64)$, while Argus rows are reported in the high-resolution setting $(512 \times 512 \times 256)$.

Model Name	Parameters	Input Resolution	Avg. NLP	GREEN	RaTEScore	RadGraphXL
CT2Rep-3B	3B	$256 \times 256 \times 64$	38.77	48.96	58.10	25.14
M3D-3B	3B	$256 \times 256 \times 64$	40.23	50.31	60.16	26.08
RadFM-3B	3B	$256 \times 256 \times 64$	39.95	49.46	59.02	25.73
Argus-3B	3B	$512 \times 512 \times 256$	43.03	55.56	66.53	29.52
Argus-8B	8B	$512 \times 512 \times 256$	45.81	58.42	70.68	32.04
Argus-70B	70B	$512 \times 512 \times 256$	**47.98**	**60.22**	**72.53**	**33.07**

As shown in Table 2.1, within the reported benchmark settings, higher input resolution and larger language decoders in Argus are associated with stronger clinical-efficacy scores.

2.5. 3D Medical Image Segmentation and Organ-Guided Attention

Accurate anatomical localization is essential for generating specific and clinically actionable radiology reports. The availability of automated whole-body 3D segmentation tools has enabled VLM architectures that use anatomical priors to ground text generation.

2.5.1. Volumetric Segmentation Frameworks

While early segmentation models relied on 3D CNNs such as 3D U-Net, transformer-based architectures have become prominent by capturing long-range contextual dependencies more effectively. TransUNet [24] and Swin-UNet [52] demonstrated strong results for 2D medical segmentation, but volumetric data requires dedicated 3D processing.

nnFormer (Interleaved Transformer for Volumetric Medical Image Segmentation) [53] extends transformer capabilities to 3D medical images. By interleaving local 3D convolution operations with global multi-head self-attention, nnFormer captures both local texture cues and broader geometric relationships between organs, and reports strong benchmarks on multiple 3D datasets.

In practical clinical pipelines, TotalSegmentator [54] is a widely used tool for automatic segmentation. Built on the nnU-Net framework, it provides out-of-the-box segmentation of 104 anatomical structures, including major organs, bones, vessels, and muscles, from standard CT images. The resulting 3D masks can serve as precise anatomical priors for downstream generative tasks.

2.5.2. Organ-Guided Attention and Clinical Grounding

Incorporating these anatomical priors into VLM architectures enables a shift from global image captioning to localized organ-specific reasoning. Rather than processing an entire CT volume as a uniform sequence of visual tokens, organ-guided mechanisms restrict or bias cross-attention to regions associated with specific query structures such as the lungs or liver.

This approach draws on learnable query architectures such as the Perceiver [55], where a fixed set of latent vectors attends to a large sensory input. In medical settings, these latent vectors can represent specific organs. By masking visual features with 3D segmentation maps before cross-attention, the language decoder is constrained to focus on relevant anatomy when generating each report segment; recent organ-mask-guided report generation studies support this design direction [56, 57].

Recent radiology report generation work also shows that auxiliary clinical objectives can strengthen organ-level representations during training [58, 57]. Joint optimization with diagnosis-oriented signals such as disease prediction, terminology prediction, or organ-aware diagnosis losses encourages the visual encoder to separate subtle abnormal cues in anatomically relevant regions. This additional supervision provides a practical inductive bias for more clinically grounded report generation.

3. Methodology

3.1. Pipeline Overview

This thesis studies organ-aware report generation from 3D chest CT. The model input is a CT volume $V \in \mathbb{R}^{D \times H \times W}$ together with organ masks $\{M_o\}_{o \in \mathcal{O}}$ for a fixed organ set $\mathcal{O}$. The output is an organ-structured report in which each organ receives a dedicated text segment.

For patient i, we model:

$$\hat{Y}_i = f_\theta(V_i, \{M_{i,o}\}_{o \in \mathcal{O}}), \tag{3.1}$$

where $\hat{Y}_i = \{\hat{y}_{i,o}\}_{o \in \mathcal{O}}$ denotes organ-level generated text. A report-level prediction is assembled by concatenating organ sections in a fixed anatomical order.

The end-to-end workflow contains six stages:

1. CT preprocessing and mask preparation.
2. Report decomposition into organ-level supervision.
3. Organ-aware visual token extraction from a 3D ViT encoder.
4. Projection/bridging into decoder embedding space.
5. Organ-conditioned text generation.
6. Report assembly and metric computation.

Figure 3.1 illustrates this pipeline from free-text report decomposition to organ-conditioned generation.

The same interface is used across four decoder families: MedGemma [18], BERT-base [14], GPT-2 [19], and BioBART [20].

3.2. Data and Targets

3.2.1. Volume and Mask Preprocessing

The training and evaluation code uses a consistent MONAI-based transform stack. Given raw NIfTI CT and segmentation volumes, preprocessing applies:

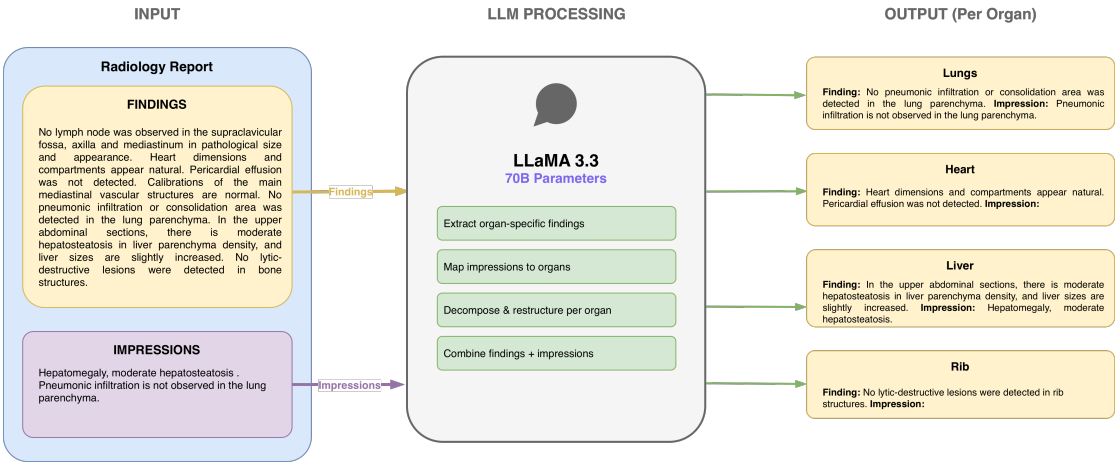

Figure 3.1.: Organ decomposition and generation pipeline. A free-text radiology report is decomposed into organ-keyed targets, aligned with CT volume and organ masks, and used to train organ-conditioned report generation. Adapted from fVLM [13] with modifications for organ-level supervision and analysis.

1. channel standardization and axis transposition,
2. HU clipping ($[-1150, 350]$) and min-max normalization to $[0, 1]$,
3. spatial harmonization to $(112, 256, 352)$ via padding/resizing,
4. trilinear interpolation for CT and nearest-neighbor interpolation for masks.

Replacing center-cropping with full-volume resizing reduces accidental exclusion of peripheral anatomy.

3.2.2. Target Organ Set and Segmentation Mapping

The final schema uses 12 organs:

$$\mathcal{O} = \{\text{lung, heart, esophagus, liver, gallbladder, stomach,} \\ \text{pancreas, spleen, kidney, aorta, trachea, rib}\}. \tag{3.2}$$

Mask extraction follows fixed segmentation-ID mappings summarized in Table 3.1.

3.2.3. Report Decomposition Targets

Reference reports are decomposed into organ-keyed JSON records using an instruction-following LLM pipeline based on Llama-3.3-70B-Instruct. Inference is served through

Table 3.1.: Organ-to-segmentation-ID mapping used for binary mask construction.

Organ	Segmentation IDs
Lung	10, 11, 12, 13, 14
Heart	51, 61
Aorta	52
Esophagus	15
Trachea	16
Rib	92–115
Liver	5
Gallbladder	4
Stomach	6
Pancreas	7
Spleen	1
Kidney	2, 3

vLLM [59] with AWQ quantization [60]. The decomposition enforces:

1. schema-constrained JSON output,
2. one text field per organ key,
3. explicit empty/null handling for missing organs.

This converts free-text supervision into organ-conditioned targets and enables organ-level error analysis.

During training, each organ is paired with an organ-specific prompt. MedGemma branches use chat-format prompts, while BERT-base/GPT-2/BioBART branches use shorter textual prompts such as `Describe [organ]:`. In all branches, loss is masked to the response region only.

3.2.4. Organ Visibility and Report Presence Distribution

Although CT-RATE is a chest CT dataset, upper-abdominal organs appear in a non-trivial subset of studies. To make this explicit, we report organ visibility across the dataset and organ-level report presence after decomposition.

For each organ, studies in the training split are partitioned into four alignment cases: visible and reported, visible but unreported, reported without visible support, and neither. This joint view separates visual sparsity from text-label sparsity and directly

motivates the empty-organ handling and imbalance-control strategies used later in training.

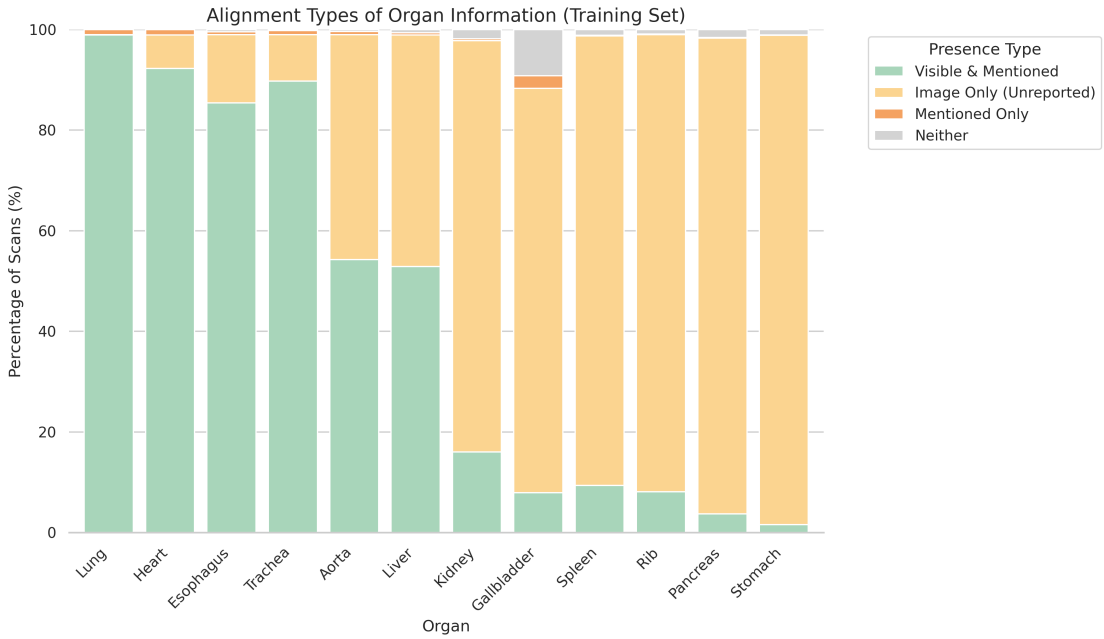

Figure 3.2.: Alignment types of organ information in the CT-RATE training split. For each organ, scans are partitioned into cases where the organ is both visible and reported, visible but unreported, reported without visible support, or neither. Several upper-abdominal organs are frequently present in chest CT but rarely mentioned in reports.

3.3. Model Architecture

3.3.1. 3D Visual Backbone

All principal variants use a 3D ViT encoder initialized from pretrained weights and fine-tuned end-to-end. The encoder architecture and default backbone settings are directly adapted from the fVLM implementation [13] to keep the visual frontend aligned with prior work. The standard configuration uses input size $(112, 256, 352)$, patch size $(16, 16, 32)$, and hidden size 768.

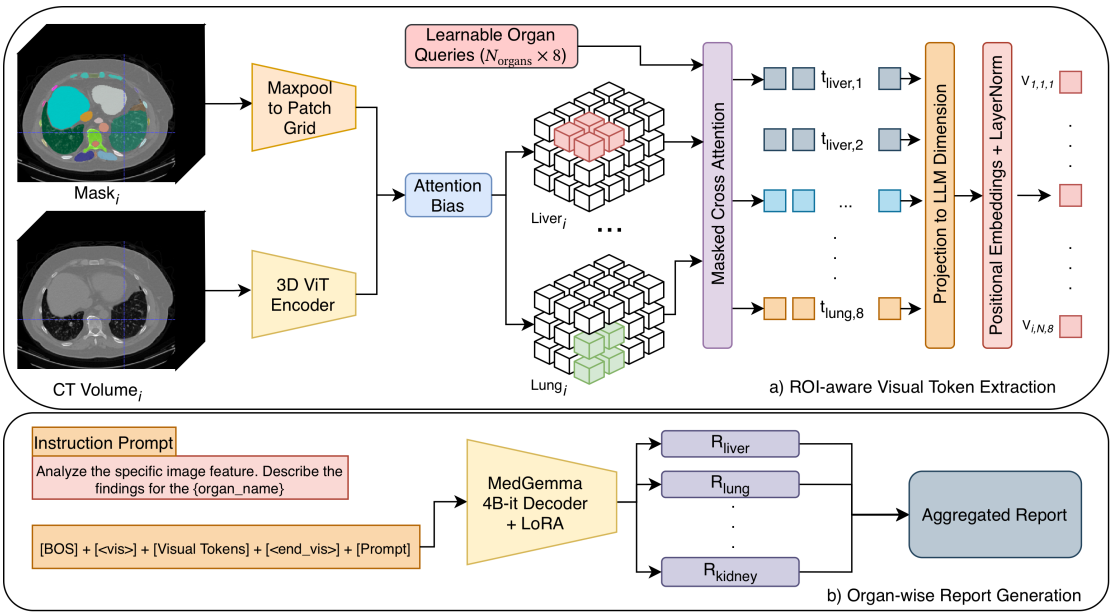

Figure 3.3.: Representative MedGemma instantiation of the shared organ-attention frontend. (a) ROI-aware visual token extraction: organ masks are pooled to the ViT patch grid and used as attention bias in masked cross-attention with learnable organ queries, producing organ-specific visual tokens that are projected to the LLM embedding space and enriched with positional embeddings and layer normalization. (b) Organ-wise report generation: the visual tokens are inserted into a multimodal prefix together with an instruction prompt and decoded by MedGemma-4B-it with LoRA adapters to generate organ-level findings, which are aggregated into the final report. The same organ-attention visual frontend is used in decoder-family comparisons with BERT-base, GPT-2, and BioBART. Adapted from fVLM [13] with modifications for organ-level supervision and analysis.

3.3.2. Organ Queries and Masked Cross-Attention

Let $F(V) \in \mathbb{R}^{T \times d_v}$ be ViT token features and $Q_o \in \mathbb{R}^{K \times d_v}$ be learned queries for organ o. Organ masks are downsampled to the ViT token grid and converted into additive attention bias B_o that blocks background tokens.

Organ token extraction is:

$$Z_o = \mathrm{MHA}(Q_o, F(V), F(V); B_o), \tag{3.3}$$

where $Z_o \in \mathbb{R}^{K \times d_v}$. In implementation, mask downsampling is aligned to the token-grid geometry $(7, 16, 11)$.

3.3.3. Token Granularity and Empty-Organ Safety

Two token-interface regimes are used:

- **Multi-token interface:** $K = 8$ tokens per organ (96 tokens for 12 organs).
- **Compressed interface:** effective one-token-per-organ representation before decoder conditioning.

Empty masks are explicitly handled. If an organ query sees only blocked positions, attention bias is reset for that path to avoid undefined softmax behavior and NaN propagation.

3.3.4. Projection, Stabilization, and Sentinel Wrapping

Visual features are projected from $d_v = 768$ to decoder hidden size d_l:

$$\tilde{Z}_o = W_p Z_o + b_p, \quad W_p \in \mathbb{R}^{d_v \times d_l}. \tag{3.4}$$

Before concatenation with text embeddings, two stabilization steps are applied:

1. layer normalization on projected visual tokens,
2. variance matching to decoder embedding scale.

For MedGemma, the sequence format is:

$$[\mathrm{BOS}],\ \texttt{<vis>},\ \tilde{Z}_o,\ \texttt{<end_vis>},\ \text{text prompt and target tokens.} \tag{3.5}$$

Loss is masked over injected visual tokens so gradients are concentrated on target text generation.

3.4. Variants Evaluated

Table 3.2 summarizes the major variants with concise display names. The raw run IDs are listed in Appendix B. The Base-1T/Base-8T pair shares the same stable-prefix interface (masked organ cross-attention, direct projector, visual positional embeddings, explicit visual sentinels) and is used for strict token-count control. Perceiver and multiscale variants test heavier visual aggregation/fusion. The CNN+alignment branch adds a CNN stem and explicit alignment regularization. Curriculum and hard-example branches isolate optimization-policy effects under the same core interface. Decoder-family branches cover MedGemma, BERT-base, GPT-2, and BioBART with the same visual frontend.

Table 3.2.: Model variants and principal design differences.

Variant	**Main Design Choice**
Base-1T	Stable-prefix MedGemma baseline with 1 organ token and explicit visual sentinel wrapping.
Base-8T	Same stable-prefix baseline as Base-1T with 8 organ tokens.
MaxPool-8T	Keeps the baseline design but changes mask downsampling to max pooling before token-grid attention.
Perceiver-8T	Replaces single cross-attention with stacked Perceiver-style self/cross-attention blocks.
Multiscale-8T	Fuses intermediate ViT features from multiple depths before organ-query attention.
CNNAlign-8T	Adds CNN stem and visual-text alignment loss; explores stronger encoder bias and contrastive regularization.
Align-8T	Adds alignment regularization without the full CNN+alignment stack.
Curriculum-8T	Two-phase pathology-first curriculum before full-distribution training.
HardMining-8T	Dynamic weighted sampler emphasizing high-loss samples.
WeightedLoss-1T	Single-token prefix-stable branch with reweighted loss contributions for explicit versus default organ statements.
BERT-base / GPT-2 / BioBART branches	Same organ-attention encoder interface with decoder-family adaptation for cross-family comparison.

3.4.1. Controlled Comparison Groups

To keep interpretation focused, we organize results by groups where one factor is changed at a time.

- Token-count control group (stable-prefix lineage): Base-1T and Base-8T isolate token-count effects with matched prefix/interface and training settings.
- Mask-downsampling transition: Base-8T and MaxPool-8T isolate the effect of switching mask downsampling from area interpolation to max pooling.
- Architecture group (maxpool lineage): MaxPool-8T, Perceiver-8T, Multiscale-8T, Align-8T, and CNNAlign-8T isolate visual-backbone and bridge choices under a shared maxpool-based interface.
- Training-policy group (single-token area lineage): Base-1T and WeightedLoss-1T isolate loss-side imbalance-control choices under the same single-token prefix architecture.
- Training-policy group (maxpool lineage): MaxPool-8T, HardMining-8T, and Curriculum-8T isolate optimization-policy effects in the maxpool-based branch.
- No-findings text-policy group: DefaultText and SynonymText share the same resized alignment backbone and differ only in default empty-organ phrasing.
- Decoder-family group: MedGemma, BERT-base, GPT-2, and BioBART use the same organ-attention visual frontend for cross-decoder comparison.

3.5. Decoder Adaptation and Training Objective

3.5.1. Decoder-Specific Adaptation

MedGemma is adapted with LoRA [41] while the base model remains frozen. Main settings are rank $r = 16$, $\alpha = 32$, dropout 0.05, and target modules `q_proj, k_proj, v_proj, o_proj, gate_proj, up_proj, down_proj`.

BERT-base, GPT-2, and BioBART branches use the same organ-attention visual frontend within a `VisionEncoderDecoderModel` interface. The BERT-base branch is trained with language modeling loss as a reproducible reference aligned with the fVLM decoder description. Decoder-side adaptation unfreezes a restricted subset (cross-attention/normalization/output layers and embeddings). For BioBART, shared embeddings and output-head weights are copied from pretrained checkpoints to avoid random-initialization drift in wrapper mode.

3.5.2. Weighted Language Modeling Loss

With batch index i, organ o, and token position t, the primary objective is:

$$\mathcal{L}_{\mathrm{LM}} = \frac{1}{B|\mathcal{O}|} \sum_{i=1}^{B} \sum_{o \in \mathcal{O}} w_{i,o} \left(\frac{1}{T_{i,o}} \sum_{t=1}^{T_{i,o}} \mathrm{CE}(y_{i,o,t}, \hat{y}_{i,o,t}) \right), \tag{3.6}$$

where $w_{i,o}$ is an organ/sample weight for imbalance control.

3.5.3. Optional Alignment Objective

Some variants add visual-text contrastive alignment:

$$S_{o,o'} = \frac{\langle v_o, t_{o'} \rangle}{\tau}, \tag{3.7}$$

and optimize:

$$\mathcal{L} = \mathcal{L}_{\mathrm{LM}} + \lambda \mathcal{L}_{\mathrm{align}}. \tag{3.8}$$

This is used mainly in CNNAlign-8T and Align-8T, and in selected BERT-base/GPT-2/BioBART branches.

3.6. Optimization and Inference

3.6.1. Shared Optimization Settings

Across main training runs, settings are largely standardized:

- batch size 1 per device, gradient accumulation 8,
- learning rate 1×10^{-4}, weight decay 0.01, warmup ratio 0.05,
- 1 training epoch,
- bf16 with gradient checkpointing,
- checkpoint/evaluation every 200 steps.

3.6.2. Training-Strategy Variants

Beyond architecture, the active training-policy comparisons evaluate curriculum learning, hard-example mining, and organ-weighted losses.

3.6.3. Organ-Wise Inference and Report Assembly

At inference, one prompt is generated per organ and decoded with controlled generation settings. MedGemma runs typically use 3 beams and `max_new_tokens=100`; BERT-base/GPT-2/BioBART runs typically use 4 beams and `max_length=120`. For strict within-family ranking, decoding policy is held fixed (beam vs sampling and length limits). Outputs are assembled in fixed organ order:

$$\hat{R} = \texttt{LUNG:}\ \hat{y}_{\text{lung}} \parallel \cdots \parallel \texttt{KIDNEY:}\ \hat{y}_{\text{kidney}}. \tag{3.9}$$

Organs with weak or absent visual support are not forced to produce abnormal statements, reducing schema-induced hallucination.

3.7. Reproducibility Notes

- Training/evaluation artifacts are isolated per variant to prevent checkpoint and metric contamination.
- Official runs include generated report files and standardized `metrics_final.csv` summaries.
- Metric computation is centralized through one RadEval-based script with fixed key mapping [61].
- Decoder comparison uses only official organ-attention result folders.

This design keeps the thesis contribution focused: controlling organ grounding and token interface under a consistent data protocol, then comparing architecture and decoder choices on that shared foundation.

4. Experiments and Results

4.1. Experimental Setup

4.1.1. Objectives and Research Questions

This chapter evaluates organ-aware 3D CT report generation under a consistent CT-RATE protocol. Results are organized by four research questions:

- **RQ1 (Token-Interface Bundle):** Does the joint token-budget and interface design improve report quality?
- **RQ2 (Architecture):** Do heavier visual modules outperform the simpler masked cross-attention baseline?
- **RQ3 (Training Strategy):** How much do curriculum, hard-example, and imbalance policies change outcomes?
- **RQ4 (Decoder Family):** Under the same frontend, how do MedGemma, BERT-base, GPT-2, and BioBART compare?

4.1.2. Dataset and Preprocessing

All experiments use **CT-RATE** [2], following the official train/validation/test split defined in the CT-RATE release. Table 4.1 summarizes dataset-level context.

Table 4.1.: CT-RATE dataset-level statistics used in this thesis.

Statistic	Value
Total CT Volumes	25,692
Unique Patients	21,304
Modality	3D chest CT
Text Modality	Findings + impression
Split Policy	Official train/validation/test split

Preprocessing follows Chapter 3: HU clipping and normalization, spatial harmonization to $(112, 256, 352)$, organ-mask extraction, and report decomposition into organ sections.

4.1.3. Organ Coverage Profile

Per-organ support is uneven in decomposed chest-CT reporting. Table 4.2 reports matched-reference counts from the best MedGemma evaluation artifact using the same pipeline for all metrics.

Table 4.2.: Per-organ coverage among matched validation samples (GLOBAL = 1563).

Organ	N	Coverage (%)
Lung	1562	99.94
Heart	1446	92.51
Esophagus	1353	86.56
Trachea	1411	90.28
Aorta	867	55.47
Liver	850	54.38
Kidney	280	17.91
Gallbladder	153	9.79
Spleen	146	9.34
Rib	117	7.49
Pancreas	57	3.65
Stomach	20	1.28

4.1.4. Implementation and Optimization Defaults

Training/evaluation uses PyTorch, HuggingFace Transformers, and MONAI. Default optimization settings across training runs are listed in Table 4.3.

4.1.5. Ablation Axes

Table 4.4 defines the comparison axes used throughout this chapter. Display-name to run-ID mapping is provided in Appendix B.

Table 4.3.: Shared optimization defaults across main training runs.

Hyperparameter	Value
Per-device batch size	1
Gradient accumulation	8
Learning rate	1×10^{-4}
Weight decay	0.01
Warmup ratio	0.05
Training-stage epochs	1
Precision	bf16
Gradient checkpointing	Enabled
Save/eval frequency	Every 200 steps

Table 4.4.: Ablation axes and evaluated variants.

Axis	Variants
Token-count control in stable-prefix lineage	Base-1T, Base-8T
Mask-downsampling transition	Base-8T, MaxPool-8T
Encoder architecture in the max-pool lineage	MaxPool-8T, Perceiver-8T, Multiscale-8T, Align-8T, CNNAlign-8T
Training strategy in the single-token area lineage	Base-1T and WeightedLoss-1T
Training strategy in the maxpool lineage	MaxPool-8T, HardMining-8T, Curriculum-8T
Default-text phrasing as a strict pair	DefaultText and SynonymText
Decoder family	MedGemma, BERT-base, GPT-2, and BioBART under shared organ-attention frontend
Protocol-matched baseline	fVLM-aligned encoder setup on CT-RATE with a BERT-base decoder [13]

4.2. Evaluation Protocol

4.2.1. Metric Families

We report complementary metric groups. Lexical overlap is measured with BLEU-4 [15], ROUGE-L [16], METEOR [62], and CIDEr [63]. Semantic similarity is measured with BERTScore [64]. Clinical and factual consistency is measured with CheXbert [46], RadGraph [17], GREEN [4], RadCliQ [65], and an SRR-BERT style score. Here, CheXbert is the report-labeling evaluator and should not be conflated with the CheXpert chest X-ray dataset [45] used in model pretraining pipelines.

Formal equations are provided in Appendix A. Chapter-level interpretation focuses on metric behavior and agreement patterns.

4.2.2. Metric Interpretation Policy

Model ranking is anchored on GREEN and RadGraph, then cross-checked with lexical-semantic metrics. CheXbert is reported but interpreted cautiously for organ-decomposed CT text because its design assumptions are closer to full-report label extraction workflows. Unless noted otherwise, internal metric values in this thesis are reported on a 0–100 scale. RadCliQ follows the inverse direction: lower values indicate better report quality.

For decoder-family analysis, we also report generation-behavior diagnostics to detect template collapse. These include exact-report uniqueness ratio, top-k template coverage, and effective-template ratio $\exp(H)/N$, where H is Shannon entropy over normalized report-frequency counts and N is the number of generated reports.

4.2.3. Evaluation Reproducibility and Result Provenance

All checkpoints are evaluated with one standardized workflow: report generation, metric computation with the same RadEval framework [61], and structured aggregation of global and organ-level scores. This removes evaluation variability and keeps model comparisons methodologically consistent.

Metric definitions and table semantics are fixed before comparison. As a result, every experiment in this chapter is interpreted under the same scoring rules.

Quantitative claims are drawn only from official runs produced under this shared protocol. MedGemma ablations, text-policy comparisons, and decoder-family comparisons all follow the same data split, preprocessing assumptions, and evaluation pipeline. Within each comparison block, decoding policy is also matched (beam/sampling and length constraints).

4.2.4. Qualitative Protocol for Attention Maps

Cross-attention maps are interpreted with the following checks: spatial overlap with the queried organ mask, compactness vs diffusion, stability across planes, and false activation in anatomically confounding neighbors.

4.3. Results by Research Question

4.3.1. Main MedGemma Result Tables

Table 4.5 reports the core MedGemma ablations, and Table 4.6 provides the full aggregated matrix.

Table 4.5.: Core MedGemma ablations on the CT-RATE validation set.

Model	GREEN	BLEU-4	METEOR	ROUGE-L	CIDEr	BERTScore	RadGraph	CheXbert	RadCliQ (↓)	SRR-BERT
Base-1T	31.6	8.3	31.8	33.5	2.5	56.4	23.9	18.4	100.2	28.9
Base-8T	**32.8**	**8.8**	**32.5**	**34.4**	4.1	**56.9**	**24.6**	22.7	104.1	**32.7**
MaxPool-8T	32.0	8.6	32.2	33.8	3.5	56.6	24.1	21.3	102.0	31.6
Multiscale-8T	32.7	8.6	32.2	33.7	**4.3**	56.6	24.2	24.1	102.2	32.6
Perceiver-8T	31.6	8.2	31.7	33.3	3.6	56.4	23.6	22.1	100.8	30.8
CNNAlign-8T	31.3	8.3	31.8	33.5	3.0	56.4	24.2	20.6	100.7	30.1
Curriculum-8T	19.4	3.2	25.0	25.0	1.8	50.7	13.3	**26.9**	**77.3**	32.2

Table 4.6.: Full MedGemma training matrix.

Model	GREEN	BLEU-4	METEOR	ROUGE-L	CIDEr	BERTScore	RadGraph	CheXbert	RadCliQ (↓)	SRR-BERT
Curriculum-8T	19.4	3.2	25.0	25.0	1.8	50.7	13.3	26.9	**77.3**	32.2
HardMining-8T	31.6	8.3	31.9	33.2	4.3	56.3	23.7	19.8	99.9	30.7
WeightedLoss-1T	29.8	6.3	29.4	31.6	2.5	55.5	21.4	19.9	95.2	29.3
Align-8T	31.3	8.3	31.8	33.2	3.2	56.4	23.8	21.6	100.7	31.6
CNNAlign-8T	31.3	8.3	31.8	33.5	3.0	56.4	24.2	20.6	100.7	30.1
Base-1T	31.6	8.3	31.8	33.5	2.5	56.4	23.9	18.4	100.2	28.9
Base-8T	**32.8**	**8.8**	**32.5**	**34.4**	4.1	**56.9**	**24.6**	22.7	104.1	**32.7**
MaxPool-8T	32.0	8.6	32.2	33.8	3.5	56.6	24.1	21.3	102.0	31.6
Multiscale-8T	32.7	8.6	32.2	33.7	4.3	56.6	24.2	**24.1**	102.2	32.6
Perceiver-8T	31.6	8.2	31.7	33.3	3.6	56.4	23.6	22.1	100.8	30.8

4.3.2. RQ1: Token-Interface Bundle

RQ1 is answered with a strict token-count control inside the same stable-prefix branch. Base-8T outperforms Base-1T on GREEN, BLEU-4, ROUGE-L, BERTScore, and RadGraph, but is worse on RadCliQ (104.1 vs 100.2).

Because Base-1T and Base-8T share the same prefix/interface design and matched training policy, this is interpreted as a direct token-count effect under the current compute budget.

The mask-downsampling transition remains secondary: MaxPool-8T stays below Base-8T on the primary quality signals, so max-pooling alone does not explain the Base-8T gain.

4.3.3. RQ2: Architecture Complexity

Table 4.7 summarizes deltas against baseline for representative models. In the maxpool-derived architecture branch, heavier modules such as Perceiver, multiscale, and CNN+alignment variants do not consistently outperform MaxPool-8T under the current training budget.

Within this branch, Multiscale-8T is the strongest of the heavier variants, but its gains are modest and not uniform across metric families. Perceiver-8T and CNNAlign-8T remain below MaxPool-8T on the main global signals, which weakens the claim that added architectural complexity is the main driver of quality in this setup. A direct loss-composition comparison is also available in this branch: MaxPool-8T (pure LM objective) versus Align-8T (LM+alignment). Align-8T remains below MaxPool-8T on GREEN, BLEU-4, and RadGraph, while slightly better on RadCliQ (100.7 vs 102.0), so alignment regularization alone does not deliver consistent global gains under the current setup.

The practical interpretation is that complexity helps only in narrow cases under the current budget and does not establish a robust global advantage. Under one-epoch training with the current optimization constraints, interface quality remains more reliable than heavier visual modules.

Table 4.7.: Delta against Base-1T (model minus baseline). For RadCliQ, negative deltas indicate improvement.

Model	ΔGREEN	ΔBLEU-4	ΔRadGraph	ΔRadCliQ (↓)
Base-8T	+1.21	+0.49	+0.75	+3.87
MaxPool-8T	+0.39	+0.27	+0.21	+1.79
Multiscale-8T	+1.10	+0.28	+0.31	+1.99
Perceiver-8T	-0.05	-0.06	-0.22	+0.57
Align-8T	-0.30	+0.03	-0.06	+0.51
CNNAlign-8T	-0.32	-0.05	+0.37	+0.53
HardMining-8T	-0.06	+0.05	-0.18	-0.32
WeightedLoss-1T	-1.81	-2.05	-2.46	-4.99
Curriculum-8T	-12.22	-5.09	-10.54	-22.93

Negative RadCliQ deltas indicate improvement, but isolated RadCliQ gains are not treated as sufficient evidence of better overall clinical quality.

For strict within-branch interpretation, maxpool-derived variants should be compared against MaxPool-8T in Table 4.6, while single-token policy variants should be compared against Base-1T and token-count control against Base-8T.

4.3.4. RQ3: Training Strategy

Training-policy interventions split into two branches. In the single-token area-derived branch, WeightedLoss-1T does not surpass Base-1T. In the maxpool-derived branch, HardMining-8T and Curriculum-8T do not surpass MaxPool-8T, and curriculum learning degrades most global metrics in the current two-phase configuration.

In the single-token area-derived branch, WeightedLoss-1T remains below Base-1T across clinical and lexical-semantic groups. This suggests that loss-side imbalance control alone does not recover baseline quality in the single-token branch.

In the maxpool-derived branch, HardMining-8T stays closer to MaxPool-8T but still remains below it on the primary quality signals. Curriculum-8T shows the largest overall regression in this branch. This likely reflects instability or underfitting under the current schedule rather than a generally negative verdict on curriculum ideas. Interestingly, Curriculum-8T also yields the lowest RadCliQ in the MedGemma training matrix, despite severe degradation on GREEN and RadGraph. Under the metric policy used in this thesis, this indicates a disagreement between RadCliQ and the primary clinical ranking signals under this failure mode rather than evidence that Curriculum-8T is a stronger model overall. For this reason, RadCliQ is not interpreted in isolation, and model ranking remains anchored on GREEN and RadGraph.

4.3.5. Text Policy Check: Default vs Synonym Templates

Table 4.8 compares the resized alignment branch under different default empty-organ phrasing policies. The comparison is a strict one-factor pair: DefaultText vs SynonymText.

Table 4.8.: Text-policy comparison in the resized alignment branch.

Model	GREEN	BLEU-4	ROUGE-L	RadGraph	RadCliQ (↓)
DefaultText	28.9	4.9	27.4	20.0	**88.9**
SynonymText	**33.6**	**8.2**	33.2	**25.0**	105.7

In this branch, synonym-based default phrasing improves GREEN, BLEU-4, ROUGE-L, and RadGraph relative to the default-template baseline, but degrades RadCliQ (105.7 vs 88.9). This indicates that text policy alone can shift measured report quality, but

the effect is metric-dependent even when architecture and training loop are held fixed. Code inspection indicates the resized alignment default and synonym branches share the same core architecture and training loop, so this is interpreted as a strict text-policy comparison rather than a model-family change.

4.3.6. RQ4: Decoder Family Comparison

Decoder comparison is a core axis with fixed protocol and table schema. Table 4.9 now includes MedGemma, fVLM-aligned BERT-base, GPT-2, and BioBART rows from the same standardized metric pass.

The current evidence shows a mixed but interpretable pattern. BERT-base is strongest on GREEN, RadGraph, ROUGE-L, and BERTScore, while GPT-2 leads several overlap-style metrics including BLEU-4 and CIDEr (and ties METEOR). BioBART is best on RadCliQ in this table. MedGemma (Base-8T) remains competitive but trails BERT-base on these aggregate metrics while showing much lower template reuse.

Table 4.10 reports neutral run diagnostics such as sample count and average output length.

Table 4.11 adds diversity diagnostics over normalized full reports. BERT-base shows the strongest repetition profile among the four decoders: only 41.3% unique reports, 19.0% coverage by the top five templates, and 48.2% coverage by the top fifty templates. MedGemma (Base-8T) shows much lower template reuse, with 100.0% unique reports and only 3.2% top-fifty coverage. Here, uniqueness is exact-match uniqueness on normalized full reports, so it quantifies template reuse after normalization rather than semantic similarity.

Table 4.9.: Decoder comparison on CT-RATE under a shared organ-attention frontend.

Decoder	GREEN	BLEU-4	METEOR	ROUGE-L	CIDEr	BERTScore	RadGraph	CheXbert	RadCliQ (↓)	SRR-BERT
MedGemma (Base-8T)	32.8	8.8	32.5	34.4	4.1	56.9	24.6	22.7	104.1	32.7
BERT-base (fVLM-aligned baseline)	38.2	11.9	37.1	40.3	6.2	62.0	25.2	27.5	109.2	35.3
GPT-2	29.1	15.9	37.1	36.4	8.0	59.9	22.4	38.2	103.8	38.5
BioBART	28.8	10.0	32.2	36.5	4.1	59.0	21.9	28.0	96.8	33.5

Table 4.10 provides lightweight run diagnostics that complement the quantitative decoder metrics.

To make the repetition profile concrete, Table 4.12 shows one same-patient organ excerpt together with the ground-truth reference and how often each generated excerpt is reused in the corresponding decoder output set. Excerpts are shown verbatim (not copy-edited), so clipped or unidiomatic phrasing reflects model output behavior rather than transcription errors.

Table 4.10.: Decoder run diagnostics from official generated report files.

Decoder	Samples	Avg words/report
MedGemma (Base-8T)	1563	113.0
BERT-base (fVLM-aligned baseline)	1563	80.4
GPT-2	1563	98.7
BioBART	1563	66.0

Table 4.11.: Decoder diversity diagnostics from normalized generated reports.

Decoder	Unique report ratio (%)	Top-1 template coverage (%)	Top-5 template coverage (%)	Top-50 template coverage (%)	Effective-template ratio (%)
MedGemma (Base-8T)	100.0	0.1	0.3	3.2	100.0
BERT-base (fVLM-aligned baseline)	41.3	4.7	19.0	48.2	17.8
GPT-2	60.7	4.0	13.2	32.5	35.4
BioBART	78.7	1.2	4.3	17.4	65.8

Table 4.12.: Same-patient repetition example (patient `valid_128_a_1`, organ `AORTA`). Excerpts are verbatim spans from generated and reference reports. Reuse is computed over the shared AORTA-support subset ($N = 867$).

Entry	AORTA excerpt	Exact reuse
Ground truth (reference)	The ascending aorta calibration is 41 mm. It is wider than normal. The descending aorta is slightly prominent. The aortic arch is 32 mm. It is wider than normal. Calcific atheroma plaques are observed in the aortic arch, ascending aorta, and coronary arteries. Calcific atheroma plaques are observed in the abdominal aorta.	–
MedGemma (Base-8T)	Calcified atherosclerotic plaques are observed in the aortic arch, descending aorta and coronary arteries. Atherosclerosis	1/867 (0.1%)
BERT-base (fVLM-aligned baseline)	calibrations of mediastinal major vascular structures are natural.	550/867 (63.4%)
GPT-2	calibrations of mediastinal major vascular structures are natural.	475/867 (54.8%)
BioBART	thickenings are observed in the aortic arch and coronary arteries.	243/867 (28.0%)

4.4. Fine-Grained Analyses

4.4.1. Organ-Level Analysis

Table 4.13 reports selected organ-level metrics for Base-8T (best MedGemma variant).

Table 4.13.: Base-8T (best MedGemma variant): selected organ-level metrics.

Organ	N	GREEN	RadGraph	CheXbert
LUNG	1562	13.9	8.8	22.8
HEART	1446	48.3	38.4	27.8
ESOPHAGUS	1353	63.1	37.8	78.3
TRACHEA	1411	69.2	49.1	95.2
AORTA	867	28.5	15.0	62.7
LIVER	850	24.6	35.3	71.1
KIDNEY	280	3.3	12.7	20.5

Thoracic organs with strong support tend to show higher stability than low-support abdominal organs.

4.4.2. Cross-Attention Activation Case Studies

Cross-attention overlays are extracted with a dedicated visualization script and used to assess localization quality across model variants. In the main text, we use head-averaged maps (mean across heads and across the eight query tokens assigned to each organ), which are less visually dramatic but better reflect aggregate attention mass.

These maps are computed on a coarse token grid and then upsampled, so smooth organ-level support is expected. For this representative case, Base-8T shows stronger in-mask concentration than the two heavier variants in both organs (lung: 49.4% vs 36.5% and 44.8%; kidney: 28.5% vs 14.9% and 15.6%). We treat this figure as illustrative and consistent with aggregate localization trends, not as standalone proof from a single patient.

4.4.3. fVLM-Aligned Baseline on CT-RATE

To enable direct comparison under the same protocol, this thesis includes a baseline that uses the fVLM-aligned encoder setup with a BERT-base decoder, following the decoder description in the fVLM paper [13]. This baseline is trained and evaluated on CT-RATE with the same preprocessing, report decomposition, and RadEval metric pipeline used for the other models in this chapter.

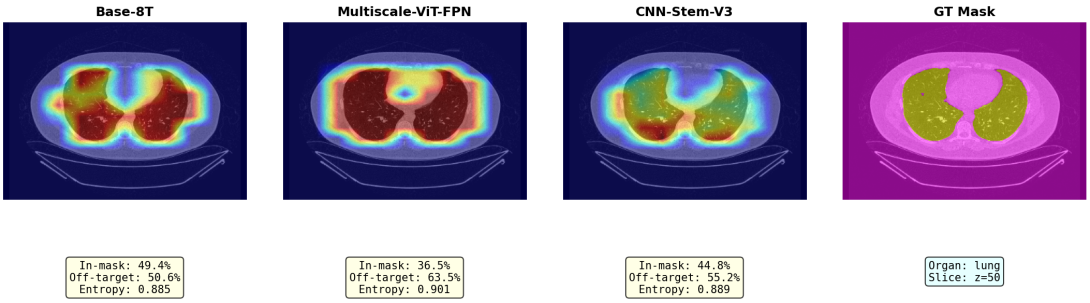

(a) Lung query (patient `valid_730_a`)

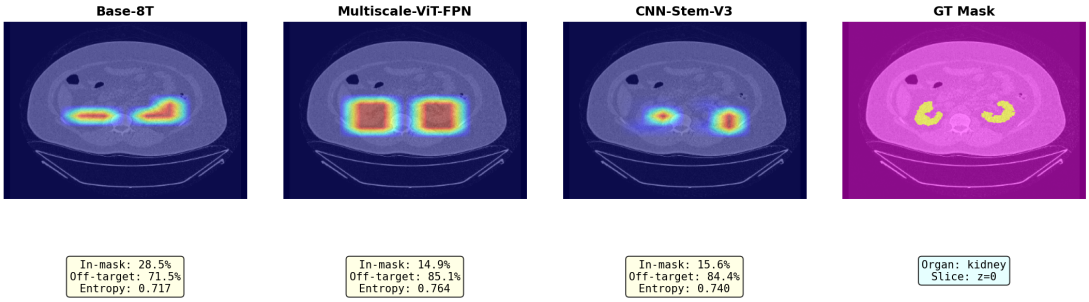

(b) Kidney query (patient `valid_730_a`)

Figure 4.1.: Representative head-averaged cross-attention overlays for lung and kidney. Each panel compares Base-8T, Multiscale-ViT-FPN, and CNN-stem+alignment under the same visualization pipeline.

Its quantitative row is now reported in Table 4.9, which enables direct protocol-matched comparison against the MedGemma, GPT-2, and BioBART runs.

4.5. Chapter Summary and Minimal Limitations Note

The strongest MedGemma ablation under the current matched protocol is Base-8T when ranking is anchored on GREEN and RadGraph. In the full cross-decoder comparison (Table 4.9), BERT-base is highest on both metrics. The result pattern across RQ1 to RQ3 indicates that token-count scaling from 1T to 8T improves quality in the stable-prefix branch, while heavier architectural modules and extra training-policy complexity provide limited additional gains. RadCliQ is a notable exception and does not favor Base-8T in this ablation family.

The decoder axis for RQ4 now has complete standardized rows for all targeted decoder families in this thesis: MedGemma, fVLM-aligned BERT-base, GPT-2, and BioBART.

Interpretation limits in this chapter are concise: uneven organ support in chest CT and partial metric-domain mismatch for organ-decomposed text. A full validity discussion is provided in Chapter 5.

5. Discussion

This chapter interprets the evidence from Chapter 4. The goal is to explain why the observed ranking emerged, which conclusions are robust, and where claims should be bounded.

5.1. Why Interface and Token Count Dominated

Empirical signal. Within MedGemma ablations under the matched protocol, Base-8T is strongest on the primary global metrics and improves GREEN, RadGraph, BLEU-4, ROUGE-L, and BERTScore over Base-1T, but not RadCliQ. For this pair, the gain can be interpreted as a token-count effect because Base-1T and Base-8T share the same stable-prefix interface and training-policy setup. This is a within-MedGemma result and is separate from the cross-decoder ranking in Table 4.9.

Mechanistic interpretation. A plausible explanation is that stable interface components reduce ambiguity at the visual-text boundary:

1. explicit visual token delimitation (sentinel wrapping),
2. consistent positional encoding over visual prefix tokens,
3. stabilized projection into decoder embedding scale.

Together they reduce ambiguity between visual context and textual instruction/response tokens. With these controls fixed, the observed Base-1T to Base-8T gain indicates that higher token capacity better preserves organ-level detail under the current budget.

Negative ablations in context. Perceiver-style resampling and multiscale fusion are not intrinsically weak. Under the current low effective batch, long context, and short training budget, their additional complexity likely increases optimization burden more than it improves report-level factuality. Within the same maxpool lineage, adding alignment regularization alone (Align-8T) also does not outperform the pure-LM reference (MaxPool-8T), which is consistent with the RQ2 interpretation.

Curriculum and hard-example strategies also underperform the best stable-prefix baseline. This indicates that weighting/sampling can refine learning but does not substitute for strong token-interface capacity.

Case-study support. The head-averaged overlays in Figure 4.1 provide spatial evidence consistent with metric trends. In this representative patient, Base-8T shows higher in-mask concentration than Multiscale and CNN-alignment variants for both lung (49.4% vs 36.5% and 44.8%) and kidney (28.5% vs 14.9% and 15.6%). The larger separation in kidney also fits the long-tail difficulty of sparse organs. These qualitative maps are used as supporting evidence, not as standalone proof.

Design implication. For this task family, the practical order is to stabilize the visual-language interface first, verify organ grounding, and then scale architectural complexity.

5.2. Metric Disagreement and Interpretation

Different metric families reward different behavior, so disagreement is expected:

- lexical metrics reward phrasing overlap,
- embedding metrics reward semantic proximity,
- clinical metrics reward factual and relational correctness.

The decoder results illustrate this directly. BERT-base is strongest on GREEN, RadGraph, ROUGE-L, and BERTScore, while GPT-2 leads several overlap-style metrics including BLEU-4 and CIDEr (and ties METEOR). BioBART is best on RadCliQ and BERT-base is worst on RadCliQ. CheXbert remains useful but is not treated as the sole clinical proxy for organ-decomposed CT text. Consistent with Section 4.2.1, model ranking prioritizes GREEN and RadGraph, then checks lexical-semantic coherence.

The MedGemma training ablations show that metric disagreement is not limited to decoder-family trade-offs. Curriculum-8T performs poorly on the primary clinical metrics GREEN and RadGraph, yet attains the lowest RadCliQ among the MedGemma rows. This suggests that RadCliQ can disagree sharply with the primary clinical ranking under certain failure modes. Accordingly, in this thesis RadCliQ is treated as a complementary diagnostic metric rather than a standalone ranking criterion.

Diversity diagnostics add an important correction to aggregate metric ranking. In Table 4.11, BERT-base has high template reuse, with almost half of reports covered by its top fifty normalized templates. MedGemma (Base-8T) shows substantially lower reuse, with near-complete report uniqueness under normalized matching. This explains why BERT can score well on global overlap-style metrics while still producing less case-specific report content.

5.3. Generalization and Organ Coverage

The chest-CT setting yields strong thoracic support and sparse support for several upper-abdominal organs. This long-tail distribution affects both training dynamics and evaluation variance:

- sparse organs have noisier metrics,
- frequent thoracic patterns dominate global optimization,
- template bias risk increases for low-support organs.

Accordingly, organ-level conclusions are most reliable for high-support organs and should be interpreted cautiously for very sparse ones. The lung/kidney attention comparison is consistent with this pattern: differences are visible in both organs, but sparse-organ behavior is more sensitive and should be validated over more than one case.

5.4. Decoder Family Axis

The decoder-comparison protocol is structurally fixed with a shared frontend, shared metric pipeline, and shared artifact policy. All target rows are now complete under this protocol: MedGemma, fVLM-aligned BERT-base, GPT-2, and BioBART. The current evidence favors BERT-base on GREEN, RadGraph, ROUGE-L, and BERTScore, while GPT-2 leads overlap-style metrics such as BLEU-4 and CIDEr; RadCliQ is the explicit exception where BioBART is stronger.

For practical deployment under organ-aware reporting objectives, model choice depends on priority: BERT-base is stronger on aggregate metric ranking, while MedGemma is safer when lower template repetition and higher case-specific variation are prioritized. In short, aggregate GREEN/RadGraph-centered ranking favors BERT-base, diversity/repetition diagnostics favor MedGemma, RadCliQ favors BioBART, and the preferred decoder should be selected by deployment objective rather than a single universal "best" label.

5.5. Relation to Prior Paradigms

Compared with many 2D report-generation settings, 3D CT introduces higher token pressure and stronger grounding demands. The results suggest that decoder scaling or heavier visual modules alone are insufficient if token semantics at the interface are not explicit and stable. This aligns with anatomy-guided trends in recent segmentation-aware and decomposition-aware literature.

5.6. Validity and Limits

Internal validity is strongest for MedGemma-family comparisons because data interfaces and evaluation pipelines are controlled. Decoder-family conclusions are now grounded by completed MedGemma, fVLM-aligned BERT-base, GPT-2, and BioBART rows under one protocol. For RQ1 specifically, causal attribution to token count is stronger than in earlier drafts because Base-1T and Base-8T now share matched stable-prefix structure; remaining uncertainty mainly comes from single-run variance.

Findings are specific to organ-decomposed chest-CT reporting and should not be over-generalized to other modalities or report styles without controlled replication.

Construct validity is strengthened by metric bundles plus case studies, but still depends on imperfect automatic metrics. Human expert evaluation remains outside the current chapter scope.

5.7. Practical Implications and Synthesis

For practitioners, the evidence supports an interface-first recipe:

1. use explicit organ-conditioned supervision,
2. stabilize visual prefix semantics and projection scale,
3. run lightweight ablations before heavy architectural scaling,
4. use metric bundles plus qualitative spatial audits,
5. separate protocol-matched internal comparisons from external contextual baselines.

Overall synthesis: under realistic compute constraints, interface calibration is the dominant success factor in this organ-aware 3D CT report-generation setup.

6. Conclusion and Future Work

6.1. Conclusion

This thesis studied organ-aware radiology report generation from 3D chest CT with a unified vision-language pipeline. The core objective was to reduce the gap between rich volumetric information and decoder-side token constraints while preserving clinically meaningful report content.

The implemented framework combined organ-level supervision via report decomposition, organ-conditioned visual token extraction, and decoder adaptation under a consistent evaluation protocol. The evidence now includes systematic MedGemma ablations and completed decoder-family rows for MedGemma, fVLM-aligned BERT-base, GPT-2, and BioBART under the same evaluation pass.

The main empirical conclusion is concise: in this setting, token budget under a stable visual-language interface is more decisive than adding architectural complexity. Within MedGemma ablations under matched decoding/training conditions, the strongest variant is the stable-prefix 8-token model (Base-8T) when ranking is anchored on GREEN and RadGraph; it outperforms the matched 1-token baseline on these and most lexical-semantic metrics, but not on RadCliQ. The new head-averaged attention case studies (lung and kidney) are consistent with this ranking and show stronger in-mask concentration for Base-8T than heavier variants in the same representative patient. In the protocol-matched decoder table (Table 4.9), the fVLM-aligned BERT-base row is highest on both GREEN and RadGraph, while BioBART is strongest on RadCliQ. Cross-decoder analysis also shows that stronger aggregate lexical-semantic metrics can coexist with higher template reuse, so deployment-oriented interpretation must include diversity and structure diagnostics in addition to metric averages.

Overall, the thesis contributes:

- a reproducible end-to-end organ-aware 3D report generation setup,
- code-grounded ablation evidence on interface, architecture, and training strategy,
- a standardized evaluation workflow supporting multi-metric interpretation,
- a protocol-matched cross-decoder comparison with completed MedGemma, fVLM-aligned BERT-base, GPT-2, and BioBART rows.

The work therefore advances both method (how to structure the task) and practice (how to implement and evaluate it reliably).

6.2. Take-Home Messages

The thesis can be reduced to four practical takeaways:

1. Organ-aware decomposition is not only a data-format choice; it is a training signal that makes failure analysis and controllable generation feasible.
2. In 3D CT report generation, token budget and interface design can matter more than adding architectural complexity.
3. Multi-metric evaluation is mandatory; single-metric optimization is too fragile for clinical text generation claims, especially when diversity/repetition behavior differs by decoder.
4. Reproducible artifact discipline (`generated_reports*.csv` + `metrics_final.csv`) is essential for trustworthy model comparison.

These messages are intended to be directly reusable by future work in volumetric medical vision-language systems, independent of decoder brand or training infrastructure.

6.3. Future Work

Future work is prioritized in three tracks.

6.3.1. Track 1: Strengthen the Current Thesis Axis

1. Add multi-seed stability checks for the decoder-family table under the same standardized metric pass.
2. Scale cross-attention analysis from illustrative cases to cohort-level statistics (in-mask ratio, off-target mass, and entropy) across both common and sparse organs.
3. Add compact significance reporting (e.g., bootstrap confidence intervals) for key global metrics.

This track is short-horizon and can be completed without redesigning the model stack. Its purpose is to close the evidence loop of the current thesis version.

6.3.2. Track 2: Improve Model Robustness and Efficiency

1. Extend token-budget control from 1 vs 8 to finer sweeps (2/4/8 tokens per organ) under matched compute.
2. Compare mask downsampling strategies (area interpolation vs max-pooling) for mask-to-token alignment.
3. Ablate bridge stabilization choices (with/without variance matching and visual positional embeddings).
4. Compare sampling policies (uniform vs organ-weighted vs hard-example weighted).
5. Analyze less-aggregated attention views (single-head/single-query) to test token specialization before averaging.
6. Explore organ-adaptive token allocation and uncertainty-aware handling for sparse organs.

This track targets the main technical bottlenecks identified by the ablations: token efficiency, interface stability, and long-tail organ robustness.

6.3.3. Track 3: Strengthen Clinical Validity

1. Add human evaluation with radiologist-centered error taxonomy.
2. Expand evaluation to temporal/longitudinal scenarios and clinically realistic reading workflows.
3. Introduce safety-oriented post-generation checks for contradiction and hallucination control.

This track is required for translational credibility. It shifts the system from benchmark-oriented progress to clinically meaningful utility and safety assessment.

6.4. Final Remark

The thesis shows that organ-aware 3D report generation is tractable when anatomical structure is treated as a first-class modeling constraint. With the current framework and completed decoder comparisons, the project is technically mature enough to move toward stronger clinical validation.

Abbreviations

List of Figures

3.1. Organ decomposition and generation pipeline. A free-text radiology report is decomposed into organ-keyed targets, aligned with CT volume and organ masks, and used to train organ-conditioned report generation. Adapted from fVLM [13] with modifications for organ-level supervision and analysis. 16

3.2. Alignment types of organ information in the CT-RATE training split. For each organ, scans are partitioned into cases where the organ is both visible and reported, visible but unreported, reported without visible support, or neither. Several upper-abdominal organs are frequently present in chest CT but rarely mentioned in reports. 18

3.3. Representative MedGemma instantiation of the shared organ-attention frontend. (a) ROI-aware visual token extraction: organ masks are pooled to the ViT patch grid and used as attention bias in masked cross-attention with learnable organ queries, producing organ-specific visual tokens that are projected to the LLM embedding space and enriched with positional embeddings and layer normalization. (b) Organ-wise report generation: the visual tokens are inserted into a multimodal prefix together with an instruction prompt and decoded by MedGemma-4B-it with LoRA adapters to generate organ-level findings, which are aggregated into the final report. The same organ-attention visual frontend is used in decoder-family comparisons with BERT-base, GPT-2, and BioBART. Adapted from fVLM [13] with modifications for organ-level supervision and analysis. 19

4.1. Representative head-averaged cross-attention overlays for lung and kidney. Each panel compares Base-8T, Multiscale-ViT-FPN, and CNN-stem+alignment under the same visualization pipeline. 35

B.1. Alignment types of organ information in the CT-RATE validation split. For each organ, scans are partitioned into cases where the organ is both visible and reported, visible but unreported, reported without visible support, or neither. 60

List of Tables

2.1. Performance benchmarking of recent 3D volumetric foundation models for radiology report generation on CT-RATE within the CT-3DRRG benchmark. All numeric values are taken directly from Table 2 of Argus [12]. CT2Rep, RadFM, and M3D rows are Argus re-evaluations of the original methods [8, 50, 48] in the normal-resolution setting $(256 \times 256 \times 64)$, while Argus rows are reported in the high-resolution setting $(512 \times 512 \times 256)$. 12

3.1. Organ-to-segmentation-ID mapping used for binary mask construction. 17
3.2. Model variants and principal design differences. 21

4.1. CT-RATE dataset-level statistics used in this thesis. 25
4.2. Per-organ coverage among matched validation samples (GLOBAL = 1563). 26
4.3. Shared optimization defaults across main training runs. 27
4.4. Ablation axes and evaluated variants. 27
4.5. Core MedGemma ablations on the CT-RATE validation set. 29
4.6. Full MedGemma training matrix. 29
4.7. Delta against Base-1T (model minus baseline). For RadCliQ, negative deltas indicate improvement. 30
4.8. Text-policy comparison in the resized alignment branch. 31
4.9. Decoder comparison on CT-RATE under a shared organ-attention frontend. 32
4.10. Decoder run diagnostics from official generated report files. 33
4.11. Decoder diversity diagnostics from normalized generated reports. . . . 33
4.12. Same-patient repetition example (patient `valid_128_a_1`, organ `AORTA`). Excerpts are verbatim spans from generated and reference reports. Reuse is computed over the shared AORTA-support subset ($N = 867$). 33
4.13. Base-8T (best MedGemma variant): selected organ-level metrics. 34

B.1. Display-name mapping for the main training result set (`results_retrain`). 59
B.2. Display-name mapping for the legacy text-policy runs (`results`). 59

B.3. Compact component matrix for the active MedGemma comparison set, ordered from older to newer within this subset. 'Token' is the per-organ visual token count, 'Pooling' is mask-to-token downsampling mode, 'Visual Bridge' marks how visual features are aggregated (including CNN stem usage), and 'Training Policy' summarizes additional interventions beyond the shared baseline pipeline. 61

Bibliography

[1] Z. Liu, Y. Lin, Y. Cao, H. Hu, Y. Wei, Z. Zhang, S. Lin, and B. Guo. "Swin Transformer: Hierarchical Vision Transformer using Shifted Windows." In: *2021 IEEE/CVF International Conference on Computer Vision (ICCV)*. 2021. arXiv: 2103.14030 [cs.CV].

[2] I. E. Hamamci, S. Er, C. Wang, F. Almas, A. G. Simsek, S. N. Esirgun, I. Dogan, O. F. Durugol, B. Hou, S. Shit, W. Dai, M. Xu, H. Reynaud, M. F. Dasdelen, B. Wittmann, T. Amiranashvili, E. Simsar, M. Simsar, E. B. Erdemir, A. Alanbay, A. Sekuboyina, B. Lafci, A. Kaplan, Z. Lu, M. Polacin, B. Kainz, C. Bluethgen, K. Batmanghelich, M. K. Ozdemir, and B. Menze. *Generalist foundation models from a multimodal dataset for 3D computed tomography*. Feb. 2026. DOI: 10.1038/s41551-025-01599-y.

[3] X. Wang, G. Figueredo, R. Li, W. E. Zhang, W. Chen, and X. Chen. *A Survey of Deep Learning-based Radiology Report Generation Using Multimodal Data*. 2025. arXiv: 2405.12833 [cs.CV].

[4] S. Ostmeier, J. Xu, Z. Chen, M. Varma, L. Blankemeier, C. Bluethgen, A. E. Michalson, M. Moseley, C. Langlotz, A. S. Chaudhari, and J.-B. Delbrouck. "GREEN: Generative Radiology Report Evaluation and Error Notation." In: *Findings of the Association for Computational Linguistics: EMNLP 2024*. Ed. by Y. Al-Onaizan, M. Bansal, and Y.-N. Chen. Miami, Florida, USA: Association for Computational Linguistics, Nov. 2024, pp. 374–390. DOI: 10.18653/v1/2024.findings-emnlp.21.

[5] Z. Chen, Y. Song, T. Chang, and X. Wan. "Generating Radiology Reports via Memory-driven Transformer." In: vol. abs/2010.16056. 2020. arXiv: 2010.16056.

[6] Z. Chen, Y. Shen, Y. Song, and X. Wan. "Cross-modal Memory Networks for Radiology Report Generation." In: *Proceedings of the 59th Annual Meeting of the Association for Computational Linguistics and the 11th International Joint Conference on Natural Language Processing (Volume 1: Long Papers)*. 2022. arXiv: 2204.13258 [cs.CL].

[7] A. Hatamizadeh, Y. Tang, V. Nath, D. Yang, A. Myronenko, B. Landman, H. R. Roth, and D. Xu. "UNETR: Transformers for 3D Medical Image Segmentation." In: *2022 IEEE/CVF Winter Conference on Applications of Computer Vision (WACV)*. 2022, pp. 1748–1758. DOI: 10.1109/WACV51458.2022.00181.

[8] I. E. Hamamci, S. Er, and B. Menze. *CT2Rep: Automated Radiology Report Generation for 3D Medical Imaging*. 2024. arXiv: 2403.06801 [eess.IV].

[9] I. E. Hamamci, S. Er, S. Shit, H. Reynaud, D. Yang, P. Guo, M. Edgar, D. Xu, B. Kainz, and B. Menze. *Better Tokens for Better 3D: Advancing Vision-Language Modeling in 3D Medical Imaging*. 2025. arXiv: 2510.20639 [cs.CV].

[10] J.-B. Alayrac, J. Donahue, P. Luc, A. Miech, I. Barr, Y. Hasson, K. Lenc, A. Mensch, K. Millican, M. Reynolds, R. Ring, E. Rutherford, S. Cabi, T. Han, Z. Gong, S. Samangooei, M. Monteiro, J. Menick, S. Borgeaud, A. Brock, A. Nematzadeh, S. Sharifzadeh, M. Binkowski, R. Barreira, O. Vinyals, A. Zisserman, and K. Simonyan. "Flamingo: a Visual Language Model for Few-Shot Learning." In: (2022). arXiv: 2204.14198 [cs.CV].

[11] J. Li, D. Li, S. Savarese, and S. Hoi. "BLIP-2: Bootstrapping Language-Image Pre-training with Frozen Image Encoders and Large Language Models." In: *Proceedings of the 40th International Conference on Machine Learning*. 2023. arXiv: 2301.12597 [cs.CV].

[12] C. Liu, Z. Wan, Y. Wang, H. Shen, H. Wang, K. Zheng, M. Zhang, and R. Arcucci. *Argus: Benchmarking and Enhancing Vision-Language Models for 3D Radiology Report Generation*. 2025. arXiv: 2406.07146 [cs.CV].

[13] Z. Shui, J. Zhang, W. Cao, S. Wang, R. Guo, L. Lu, L. Yang, X. Ye, T. Liang, Q. Zhang, and L. Zhang. "Large-scale and Fine-grained Vision-language Pre-training for Enhanced CT Image Understanding." In: *The Thirteenth International Conference on Learning Representations*. 2025. arXiv: 2501.14548 [cs.CV].

[14] J. Devlin, M.-W. Chang, K. Lee, and K. Toutanova. "BERT: Pre-training of Deep Bidirectional Transformers for Language Understanding." In: *Proceedings of the 2019 Conference of the North American Chapter of the Association for Computational Linguistics: Human Language Technologies, Volume 1 (Long and Short Papers)*. Ed. by J. Burstein, C. Doran, and T. Solorio. Minneapolis, Minnesota: Association for Computational Linguistics, June 2019, pp. 4171–4186. DOI: 10.18653/v1/N19-1423.

[15] K. Papineni, S. Roukos, T. Ward, and W.-J. Zhu. "Bleu: a Method for Automatic Evaluation of Machine Translation." In: *Proceedings of the 40th Annual Meeting of the Association for Computational Linguistics*. Ed. by P. Isabelle, E. Charniak, and D. Lin. Philadelphia, Pennsylvania, USA: Association for Computational Linguistics, July 2002, pp. 311–318. DOI: 10.3115/1073083.1073135.

[16] C.-Y. Lin. "ROUGE: A Package for Automatic Evaluation of Summaries." In: *Text Summarization Branches Out*. Barcelona, Spain: Association for Computational Linguistics, July 2004, pp. 74–81.

[17] S. Jain, A. Agrawal, A. Saporta, S. Q. Truong, D. N. Duong, T. Bui, P. Chambon, Y. Zhang, M. P. Lungren, A. Y. Ng, C. P. Langlotz, and P. Rajpurkar. "RadGraph: Extracting Clinical Entities and Relations from Radiology Reports." In: (2021). arXiv: 2106.14463 [cs.CL].

[18] A. Sellergren, S. Kazemzadeh, T. Jaroensri, A. Kiraly, M. Traverse, T. Kohlberger, S. Xu, F. Jamil, C. Hughes, C. Lau, J. Chen, F. Mahvar, L. Yatziv, T. Chen, B. Sterling, S. A. Baby, S. M. Baby, J. Lai, S. Schmidgall, L. Yang, K. Chen, P. Bjornsson, S. Reddy, R. Brush, K. Philbrick, M. Asiedu, I. Mezerreg, H. Hu, H. Yang, R. Tiwari, S. Jansen, P. Singh, Y. Liu, S. Azizi, A. Kamath, J. Ferret, S. Pathak, N. Vieillard, R. Merhej, S. Perrin, T. Matejovicova, A. Ramé, M. Riviere, L. Rouillard, T. Mesnard, G. Cideron, J.-b. Grill, S. Ramos, E. Yvinec, M. Casbon, E. Buchatskaya, J.-B. Alayrac, D. Lepikhin, V. Feinberg, S. Borgeaud, A. Andreev, C. Hardin, R. Dadashi, L. Hussenot, A. Joulin, O. Bachem, Y. Matias, K. Chou, A. Hassidim, K. Goel, C. Farabet, J. Barral, T. Warkentin, J. Shlens, D. Fleet, V. Cotruta, O. Sanseviero, G. Martins, P. Kirk, A. Rao, S. Shetty, D. F. Steiner, C. Kirmizibayrak, R. Pilgrim, D. Golden, and L. Yang. *MedGemma Technical Report*. 2025. arXiv: 2507.05201 [cs.AI].

[19] A. Radford, J. Wu, R. Child, D. Luan, D. Amodei, and I. Sutskever. "Language Models are Unsupervised Multitask Learners." In: (2019).

[20] H. Yuan, Z. Yuan, R. Gan, J. Zhang, Y. Xie, and S. Yu. "BioBART: Pretraining and Evaluation of A Biomedical Generative Language Model." In: (2022). arXiv: 2204.03905 [cs.CL].

[21] A. Dosovitskiy, L. Beyer, A. Kolesnikov, D. Weissenborn, X. Zhai, T. Unterthiner, M. Dehghani, M. Minderer, G. Heigold, S. Gelly, J. Uszkoreit, and N. Houlsby. "An Image is Worth 16x16 Words: Transformers for Image Recognition at Scale." In: *International Conference on Learning Representations*. 2021.

[22] K. He, X. Chen, S. Xie, Y. Li, P. Dollár, and R. Girshick. "Masked Autoencoders Are Scalable Vision Learners." In: *2022 IEEE/CVF Conference on Computer Vision and Pattern Recognition (CVPR)*. 2022, pp. 15979–15988. DOI: 10.1109/CVPR52688.2022.01553.

[23] M. Oquab, T. Darcet, T. Moutakanni, H. Vo, M. Szafraniec, V. Khalidov, P. Fernandez, D. Haziza, F. Massa, A. El-Nouby, M. Assran, N. Ballas, W. Galuba, R. Howes, P.-Y. Huang, S.-W. Li, I. Misra, M. Rabbat, V. Sharma, G. Synnaeve, H. Xu, H. Jegou, J. Mairal, P. Labatut, A. Joulin, and P. Bojanowski. "DINOv2: Learning Robust Visual Features without Supervision." In: *Transactions on Machine Learning Research* (2024). arXiv: 2304.07193 [cs.CV].

[24] J. Chen, Y. Lu, Q. Yu, X. Luo, E. Adeli, Y. Wang, L. Lu, A. L. Yuille, and Y. Zhou. "TransUNet: Transformers Make Strong Encoders for Medical Image Segmentation." In: (2021). arXiv: 2102.04306 [cs.CV].

[25] A. Radford, J. W. Kim, C. Hallacy, A. Ramesh, G. Goh, S. Agarwal, G. Sastry, A. Askell, P. Mishkin, J. Clark, G. Krueger, and I. Sutskever. "Learning Transferable Visual Models From Natural Language Supervision." In: *International Conference on Machine Learning*. 2021. arXiv: 2103.00020 [cs.CV].

[26] X. Zhai, B. Mustafa, A. Kolesnikov, and L. Beyer. "Sigmoid Loss for Language Image Pre-Training." In: (2023). arXiv: 2303.15343 [cs.CV].

[27] J. Li, D. Li, C. Xiong, and S. Hoi. "BLIP: Bootstrapping Language-Image Pre-training for Unified Vision-Language Understanding and Generation." In: *International Conference on Machine Learning*. 2022. arXiv: 2201.12086 [cs.CV].

[28] H. Liu, C. Li, Q. Wu, and Y. J. Lee. "Visual Instruction Tuning." In: *Advances in Neural Information Processing Systems*. Ed. by A. Oh, T. Naumann, A. Globerson, K. Saenko, M. Hardt, and S. Levine. Vol. 36. Curran Associates, Inc., 2023, pp. 34892–34916.

[29] Z. Chen, J. Wu, W. Wang, W. Su, G. Chen, S. Xing, M. Zhong, Q. Zhang, X. Zhu, L. Lu, B. Li, P. Luo, T. Lu, Y. Qiao, and J. Dai. "InternVL: Scaling up Vision Foundation Models and Aligning for Generic Visual-Linguistic Tasks." In: *2024 IEEE/CVF Conference on Computer Vision and Pattern Recognition (CVPR)* (2024). arXiv: 2312.14238 [cs.CV].

[30] M. Deitke, C. Clark, S. Lee, R. Tripathi, Y. Yang, J. S. Park, M. Salehi, N. Muennighoff, K. Lo, L. Soldaini, J. Lu, T. Anderson, E. Bransom, K. Ehsani, H. Ngo, Y. Chen, A. Patel, M. Yatskar, C. Callison-Burch, A. Head, R. Hendrix, F. Bastani, E. VanderBilt, N. Lambert, Y. Chou, A. Chheda, J. Sparks, S. Skjonsberg, M. Schmitz, A. Sarnat, B. Bischoff, P. Walsh, C. Newell, P. Wolters, T. Gupta, K.-H. Zeng, J. Borchardt, D. Groeneveld, C. Nam, S. Lebrecht, C. Wittlif, C. Schoenick, O. Michel, R. Krishna, L. Weihs, N. A. Smith, H. Hajishirzi, R. Girshick, A. Farhadi, and A. Kembhavi. "Molmo and PixMo: Open Weights and Open Data for State-of-the-Art Vision-Language Models." In: (2024). arXiv: 2409.17146 [cs.CV].

[31] S. Zhang, Y. Xu, N. Usuyama, H. Xu, J. Bagga, R. Tinn, S. Preston, R. Rao, M. Wei, N. Valluri, C. Wong, A. Tupini, Y. Wang, M. Mazzola, S. Shukla, L. Liden, J. Gao, A. Crabtree, B. Piening, C. Bifulco, M. P. Lungren, T. Naumann, S. Wang, and H. Poon. "BiomedCLIP: a multimodal biomedical foundation model pretrained from fifteen million scientific image-text pairs." In: (2025). arXiv: 2303.00915 [cs.CV].

[32] Z. Chen, M. Varma, J. Xu, M. Paschali, D. V. Veen, A. Johnston, A. Youssef, L. Blankemeier, C. Bluethgen, S. Altmayer, J. M. J. Valanarasu, M. S. E. Muneer, E. P. Reis, J. P. Cohen, C. Olsen, T. M. Abraham, E. B. Tsai, C. F. Beaulieu, J. Jitsev, S. Gatidis, J.-B. Delbrouck, A. S. Chaudhari, and C. P. Langlotz. *A Vision-Language Foundation Model to Enhance Efficiency of Chest X-ray Interpretation*. 2024. arXiv: 2401.12208 [cs.CV].

[33] S. Bannur, K. Bouzid, D. C. Castro, A. Schwaighofer, A. Thieme, S. Bond-Taylor, M. Ilse, F. Pérez-García, V. Salvatelli, H. Sharma, F. Meissen, M. Ranjit, S. Srivastav, J. Gong, N. C. F. Codella, F. Falck, O. Oktay, M. P. Lungren, M. T. Wetscherek, J. Alvarez-Valle, and S. L. Hyland. *MAIRA-2: Grounded Radiology Report Generation*. 2024. arXiv: 2406.04449 [cs.CL].

[34] L. Blankemeier, A. Kumar, J. P. Cohen, J. Liu, L. Liu, D. Van Veen, S. J. S. Gardezi, H. Yu, M. Paschali, Z. Chen, J.-B. Delbrouck, E. Reis, R. Holland, C. Truyts, C. Bluethgen, Y. Wu, L. Lian, M. E. K. Jensen, S. Ostmeier, M. Varma, J. M. J. Valanarasu, Z. Fang, Z. Huo, Z. Nabulsi, D. Ardila, W.-H. Weng, E. A. Junior, N. Ahuja, J. Fries, N. H. Shah, G. Zaharchuk, M. Willis, A. Yala, A. Johnston, R. D. Boutin, A. Wentland, C. P. Langlotz, J. Hom, S. Gatidis, and A. S. Chaudhari. "Merlin: a computed tomography vision-language foundation model and dataset." In: *Nature* (Mar. 2026). ISSN: 1476-4687. DOI: 10.1038/s41586-026-10181-8.

[35] C. Zhao, Y. Lyu, A. Z. Chowdury, E. S. Harake, A. Kondepudi, A. T. Rao, X. Hou, H. Lee, and T. C. Hollon. *Towards Scalable Language-Image Pre-training for 3D Medical Imaging*. 2026.

[36] G. Team, T. Mesnard, C. Hardin, et al. "Gemma: Open Models Based on Gemini Research and Technology." In: (2024). arXiv: 2403.08295 [cs.CL].

[37] M. Lewis, Y. Liu, N. Goyal, M. Ghazvininejad, A. Mohamed, O. Levy, V. Stoyanov, and L. Zettlemoyer. "BART: Denoising Sequence-to-Sequence Pre-training for Natural Language Generation, Translation, and Comprehension." In: (2019). arXiv: 1910.13461 [cs.CL].

[38] H. Touvron, T. Lavril, G. Izacard, X. Martinet, M.-A. Lachaux, T. Lacroix, B. Rozière, N. Goyal, E. Hambro, F. Azhar, A. Rodriguez, A. Joulin, E. Grave, and G. Lample. "LLaMA: Open and Efficient Foundation Language Models." In: (2023). arXiv: 2302.13971 [cs.CL].

[39] N. Houlsby, A. Giurgiu, S. Jastrzebski, B. Morrone, Q. de Laroussilhe, A. Gesmundo, M. Attariyan, and S. Gelly. *Parameter-Efficient Transfer Learning for NLP*. 2019. arXiv: 1902.00751 [cs.LG].

[40] X. L. Li and P. Liang. "Prefix-Tuning: Optimizing Continuous Prompts for Generation." In: (2021). arXiv: 2101.00190 [cs.CL].

[41] E. J. Hu, Y. Shen, P. Wallis, Z. Allen-Zhu, Y. Li, S. Wang, L. Wang, and W. Chen. "LoRA: Low-Rank Adaptation of Large Language Models." In: (2021). arXiv: 2106.09685 [cs.CL].

[42] T. Dettmers, A. Pagnoni, A. Holtzman, and L. Zettlemoyer. "QLoRA: Efficient Finetuning of Quantized LLMs." In: (2023). arXiv: 2305.14314 [cs.LG].

[43] B. Jing, P. Xie, and E. Xing. "On the Automatic Generation of Medical Imaging Reports." In: (2018), pp. 2577–2586. DOI: 10.18653/v1/p18-1240.

[44] A. Nicolson, J. Dowling, and B. Koopman. "Improving chest X-ray report generation by leveraging warm starting." In: *Artificial Intelligence in Medicine* 144 (Oct. 2023), p. 102633. ISSN: 0933-3657. DOI: 10.1016/j.artmed.2023.102633.

[45] J. Irvin, P. Rajpurkar, M. Ko, Y. Yu, S. Ciurea-Ilcus, C. Chute, H. Marklund, B. Haghgoo, R. Ball, K. Shpanskaya, J. Seekins, D. A. Mong, S. S. Halabi, J. K. Sandberg, R. Jones, D. B. Larson, C. P. Langlotz, B. N. Patel, M. P. Lungren, and A. Y. Ng. "CheXpert: A Large Chest Radiograph Dataset with Uncertainty Labels and Expert Comparison." In: (2019). arXiv: 1901.07031 [cs.CV].

[46] A. Smit, S. Jain, P. Rajpurkar, A. Pareek, A. Y. Ng, and M. P. Lungren. *CheXbert: Combining Automatic Labelers and Expert Annotations for Accurate Radiology Report Labeling Using BERT*. 2020. arXiv: 2004.09167 [cs.CL].

[47] Z. Wang, L. Liu, L. Wang, and L. Zhou. "R2GenGPT: Radiology Report Generation with Frozen LLMs." In: *Meta-Radiology* (2023). arXiv: 2309.09812 [cs.CV].

[48] F. Bai, Y. Du, T. Huang, M. Q. .-. Meng, and B. Zhao. *M3D: Advancing 3D Medical Image Analysis with Multi-Modal Large Language Models*. 2024. arXiv: 2404.00578 [cs.CV].

[49] Y. Xin, G. C. Ates, K. Gong, and W. Shao. *Med3DVLM: An Efficient Vision-Language Model for 3D Medical Image Analysis*. 2025. arXiv: 2503.20047 [cs.CV].

[50] C. Wu, X. Zhang, Y. Zhang, Y. Wang, and W. Xie. *Towards Generalist Foundation Model for Radiology by Leveraging Web-scale 2D&3D Medical Data*. 2023. arXiv: 2308.02463 [cs.CV].

[51] R. Wang, F. Tang, Q. Yao, R. Yan, X. Zhang, Z. Huang, H. Lai, Z. He, X. Tao, Z. Jiang, and S. K. Zhou. *SimCroP: Radiograph Representation Learning with Similarity-driven Cross-granularity Pre-training*. Oct. 2025.

[52] H. Cao, Y. Wang, J. Chen, D. Jiang, X. Zhang, Q. Tian, and M. Wang. "Swin-Unet: Unet-like Pure Transformer for Medical Image Segmentation." In: *Computer Vision – ECCV 2022 Workshops*. 2021. arXiv: 2105.05537 [eess.IV].

[53] H.-Y. Zhou, J. Guo, Y. Zhang, L. Yu, L. Wang, and Y. Yu. "nnFormer: Interleaved Transformer for Volumetric Segmentation." In: *IEEE Transactions on Image Processing* (2022). arXiv: 2109.03201 [cs.CV].

[54] J. Wasserthal, H.-C. Breit, M. T. Meyer, M. Pradella, D. Hinck, A. W. Sauter, T. Heye, D. T. Boll, J. Cyriac, S. Yang, M. Bach, and M. Segeroth. "TotalSegmentator: Robust Segmentation of 104 Anatomic Structures in CT Images." In: *Radiology: Artificial Intelligence* 5.5 (Sept. 2023). ISSN: 2638-6100. DOI: 10.1148/ryai.230024.

[55] A. Jaegle, F. Gimeno, A. Brock, A. Zisserman, O. Vinyals, and J. Carreira. "Perceiver: General Perception with Iterative Attention." In: *ICML*. Proceedings of Machine Learning Research. 2021. arXiv: 2103.03206 [cs.CV].

[56] T. Gu, D. Liu, Z. Li, and W. Cai. "Complex Organ Mask Guided Radiology Report Generation." In: *Proceedings of the IEEE/CVF Winter Conference on Applications of Computer Vision (WACV)*. Jan. 2024, pp. 7995–8004.

[57] S. Li, P. Qiao, L. Wang, M. Ning, L. Yuan, Y. Zheng, and J. Chen. "An Organ-Aware Diagnosis Framework for Radiology Report Generation." In: *IEEE Transactions on Medical Imaging* 43.12 (2024), pp. 4253–4265. DOI: 10.1109/TMI.2024.3421599.

[58] H. Su, B. Liu, X. Zhu, X. Lu, N. Wu, and D. Hu. "TGMT: A Terminology-Guided Multi-Task Approach for Lung Cancer CT Report Generation." In: *2024 46th Annual International Conference of the IEEE Engineering in Medicine and Biology Society (EMBC)*. 2024, pp. 1–5. DOI: 10.1109/EMBC53108.2024.10781518.

[59] W. Kwon, Z. Li, S. Zhuang, Y. Sheng, L. Zheng, C. H. Yu, J. E. Gonzalez, H. Zhang, and I. Stoica. "Efficient Memory Management for Large Language Model Serving with PagedAttention." In: *Proceedings of the 29th Symposium on Operating Systems Principles*. 2023. arXiv: 2309.06180 [cs.LG].

[60] J. Lin, J. Tang, H. Tang, S. Yang, W.-M. Chen, W.-C. Wang, G. Xiao, X. Dang, C. Gan, and S. Han. "AWQ: Activation-aware Weight Quantization for LLM Compression and Acceleration." In: *MLSys*. 2024. arXiv: 2306.00978 [cs.CL].

[61] J. Xu, X. Zhang, J. Abderezaei, J. Bauml, R. Boodoo, F. Haghighi, A. Ganjizadeh, E. Brattain, D. Van Veen, Z. Meng, D. W. Eyre, and J.-B. Delbrouck. "RadEval: A framework for radiology text evaluation." In: *Proceedings of the 2025 Conference on Empirical Methods in Natural Language Processing: System Demonstrations*. Ed. by I. Habernal, P. Schulam, and J. Tiedemann. Suzhou, China: Association for Computational Linguistics, Nov. 2025, pp. 546–557. ISBN: 979-8-89176-334-0. DOI: 10.18653/v1/2025.emnlp-demos.40.

[62] S. Banerjee and A. Lavie. "METEOR: An Automatic Metric for MT Evaluation with Improved Correlation with Human Judgments." In: *Proceedings of the ACL Workshop on Intrinsic and Extrinsic Evaluation Measures for Machine Translation and/or Summarization*. Ed. by J. Goldstein, A. Lavie, C.-Y. Lin, and C. Voss. Ann Arbor, Michigan: Association for Computational Linguistics, June 2005, pp. 65–72.

[63] R. Vedantam, C. Lawrence Zitnick, and D. Parikh. "CIDEr: Consensus-Based Image Description Evaluation." In: *Proceedings of the IEEE Conference on Computer Vision and Pattern Recognition (CVPR)*. June 2015.

[64] T. Zhang, V. Kishore, F. Wu, K. Q. Weinberger, and Y. Artzi. "BERTScore: Evaluating Text Generation with BERT." In: (2020). arXiv: `1904.09675 [cs.CL]`.

[65] F. Yu, M. Endo, R. Krishnan, I. Pan, A. Tsai, E. P. Reis, E. K. U. N. Fonseca, H. M. H. Lee, Z. S. H. Abad, A. Y. Ng, C. P. Langlotz, V. K. Venugopal, and P. Rajpurkar. "Evaluating progress in automatic chest X-ray radiology report generation." In: *Patterns* 4.9 (2026/03/10 2023).

A. Metric Equations

This appendix provides the formal definitions of lexical metrics referenced in Chapter 4.

A.1. BLEU

For candidate report c and references $\{r\}$:

$$\text{BLEU} = \text{BP} \cdot \exp\left(\sum_{n=1}^{N} w_n \log p_n\right), \tag{A.1}$$

where p_n is modified n-gram precision and w_n are n-gram weights. The brevity penalty is:

$$\text{BP} = \begin{cases} 1 & c_{len} > r^*_{len} \\ \exp\left(1 - \frac{r^*_{len}}{c_{len}}\right) & \text{otherwise.} \end{cases} \tag{A.2}$$

A.2. ROUGE-L

Using longest common subsequence (LCS):

$$R_{LCS} = \frac{\text{LCS}(c,r)}{|r|}, \qquad P_{LCS} = \frac{\text{LCS}(c,r)}{|c|},$$

$$F_{LCS} = \frac{(1+\beta^2) R_{LCS} P_{LCS}}{R_{LCS} + \beta^2 P_{LCS}}. \tag{A.3}$$

A.3. METEOR

$$F_{\text{mean}} = \frac{(1+\alpha)PR}{R + \alpha P}, \tag{A.4}$$

$$\text{METEOR} = F_{\text{mean}} \cdot (1 - \text{Penalty}). \tag{A.5}$$

A.4. CIDEr

With TF-IDF-weighted n-gram vectors:

$$\mathrm{CIDEr}_n(c, r) = \frac{1}{M} \sum_{i=1}^{M} \frac{\mathbf{g}^n(c) \cdot \mathbf{g}^n(r_i)}{\|\mathbf{g}^n(c)\| \|\mathbf{g}^n(r_i)\|}. \tag{A.6}$$

B. Model Variant Name Mapping

This appendix maps the short model names used in Chapters 3, 4, and 5 to the raw run IDs in the experiment folders.

B.1. Main Training Set

This section lists the display names used throughout the thesis and maps them to raw run identifiers in the main training artifact set. It serves as the canonical reference for reproducible model-to-artifact lookup.

B.2. Text-Policy Set (Legacy)

This section maps the legacy text-policy comparison runs used for the strict default-vs-synonym analysis. These entries are kept separate from the main training set to avoid mixing experiment cohorts.

B.3. Legacy Aliases and Implementation-Only Variant

- `medical_vlm_8_tokens_full` is a deprecated duplicate branch of the current Base-8T setup and is excluded from active comparison tables.
- `lora_with_vis_tokens_pos_embed` and `medgemma_lora_vis_token_pos_embed` are older naming aliases of the Base-1T branch in legacy result exports.
- `medgemma_lora_vis_token` corresponds to a single-token interface prototype (Base-1T) kept for implementation comparison; it is not included in the standardized training metric tables.

B.4. Component Presence Matrix (Training Set Only)

B.5. Validation Split Coverage Alignment

Table B.1.: Display-name mapping for the main training result set (`results_retrain`).

Display Name	Raw Run ID	Axis	Main Difference
Base-1T	`medgemma_lora_vis_token_pos_embed_1tokens`	Token/bridge	Stable-prefix baseline with 1 organ token
Base-8T	`medgemma_lora_vis_token_pos_embed_8tokens`	Token/bridge	Same stable-prefix baseline with 8 organ tokens
MaxPool-8T	`medical_vlm_8_tokens_full_maxpool`	Token/bridge	Max-pooling mask downsampling before token-grid attention
Perceiver-8T	`perceiver_resampler`	Architecture	Perceiver-style stacked self/cross attention for visual aggregation
Multiscale-8T	`multiscale_vit_fpn`	Architecture	Multiscale fusion of intermediate ViT features
CNNAlign-8T	`medgemma_architecture_v3`	Architecture	CNN stem and alignment regularization
Align-8T	`medgemma_alignment_v1`	Architecture	Alignment objective variant without full CNN+alignment stack
HardMining-8T	`hard_example_mining`	Training policy	Weighted sampler emphasizing difficult samples
Curriculum-8T	`curriculum_learning`	Training policy	Pathology-first phase followed by full-data phase
WeightedLoss-1T	`lora_with_vis_tokens_pos_embed_weight_loss`	Training policy	Single-token branch with organ-wise and label-type loss weighting

Table B.2.: Display-name mapping for the legacy text-policy runs (`results`).

Display Name	Raw Run ID	Comparability Note
DefaultText	`medgemma_architecture_v3_resized`	Baseline for strict default-vs-synonym comparison
SynonymText	`medgemma_architecture_v3_resized_synonyms`	Strict pair with DefaultText

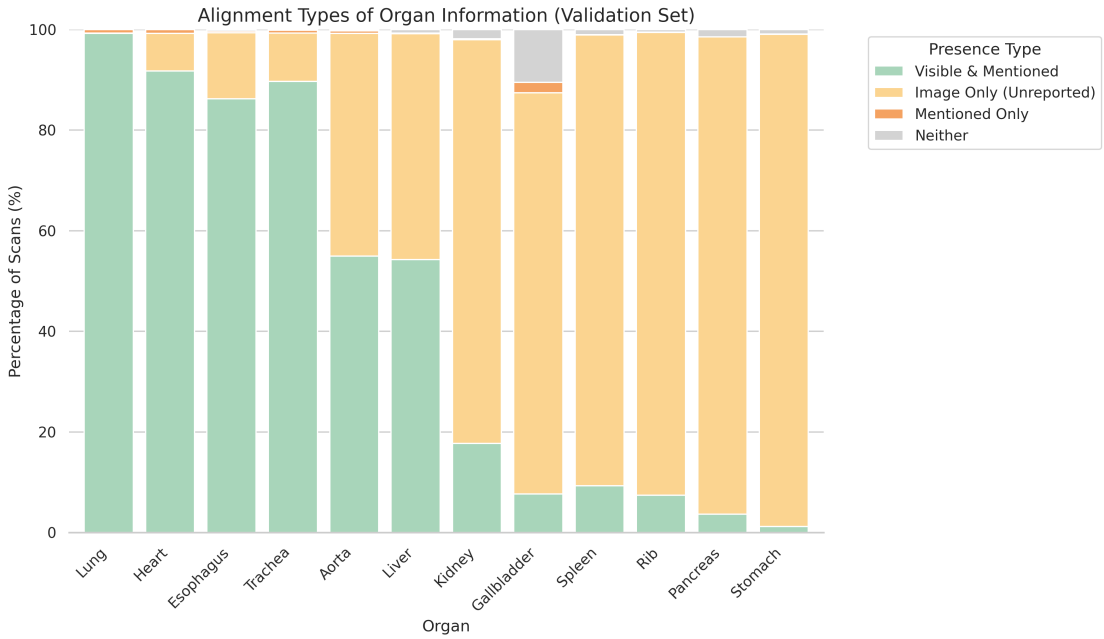

Figure B.1.: Alignment types of organ information in the CT-RATE validation split. For each organ, scans are partitioned into cases where the organ is both visible and reported, visible but unreported, reported without visible support, or neither.

Table B.3.: Compact component matrix for the active MedGemma comparison set, ordered from older to newer within this subset. 'Token' is the per-organ visual token count, 'Pooling' is mask-to-token downsampling mode, 'Visual Bridge' marks how visual features are aggregated (including CNN stem usage), and 'Training Policy' summarizes additional interventions beyond the shared baseline pipeline.

#	Raw Run ID	Token	Pooling	Visual Bridge	Training Policy	Align
1	medgemma_lora_vis_token_pos_embed_1tokens	1	Interpolation	Direct	None	
2	medgemma_lora_vis_token_pos_embed_8tokens	8	Interpolation	Direct	None	
3	lora_with_vis_tokens_pos_embed_weight_loss	1	Interpolation	Direct	Weighted loss	
4	medical_vlm_8_tokens_full_maxpool	8	Maxpooling	Direct	None	
5	perceiver_resampler	8	Maxpooling	Perceiver resampler	None	
6	multiscale_vit_fpn	8	Maxpooling	Multiscale FPN	None	
7	hard_example_mining	8	Maxpooling	Direct	Hard mining	
8	curriculum_learning	8	Maxpooling	Direct	Curriculum	
9	medgemma_alignment_v1	8	Maxpooling	Direct	None	X
10	medgemma_architecture_v3	8	Maxpooling	Direct + CNN stem	None	X