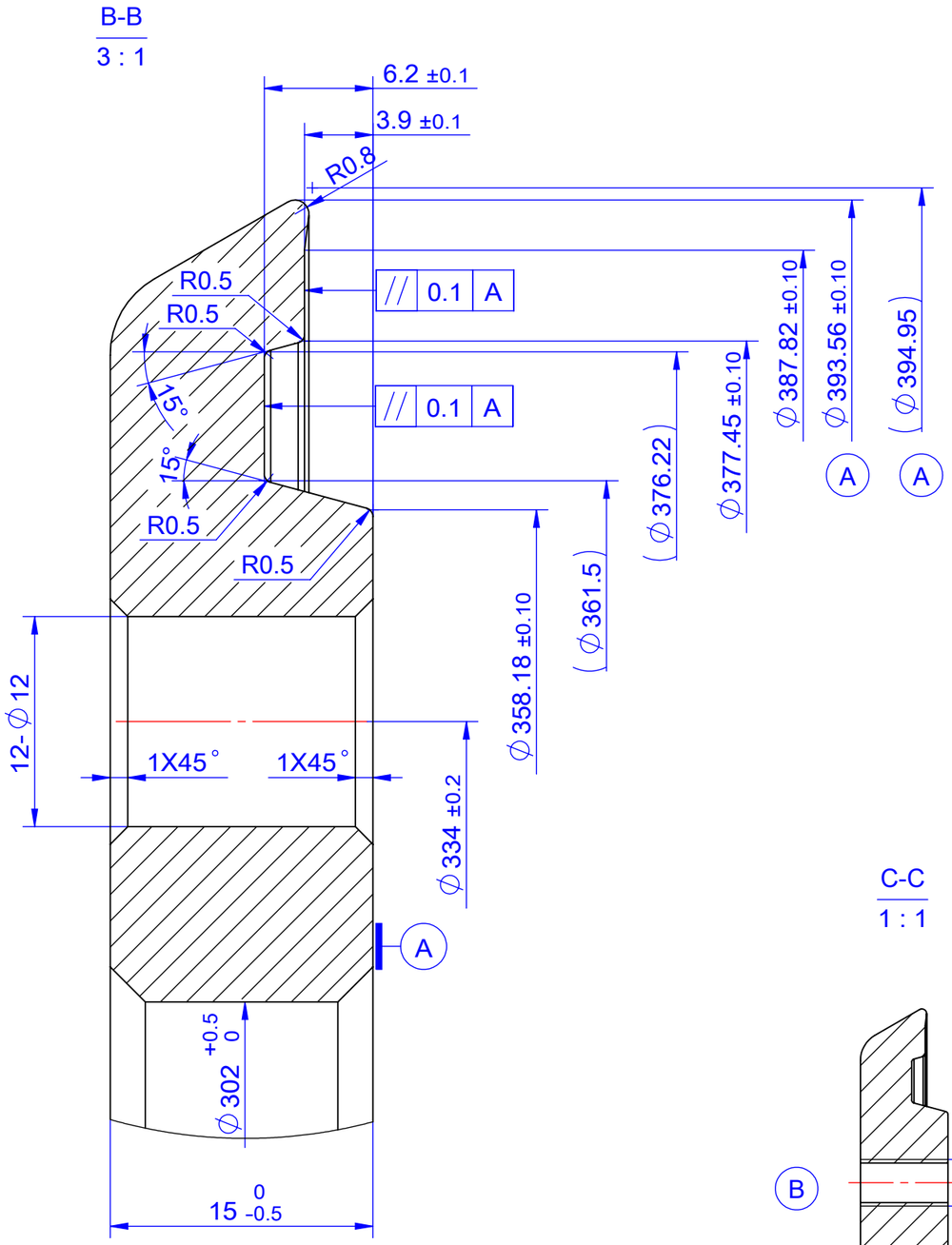

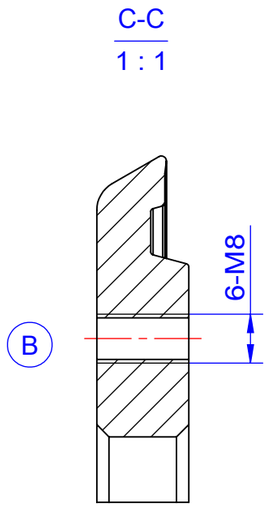

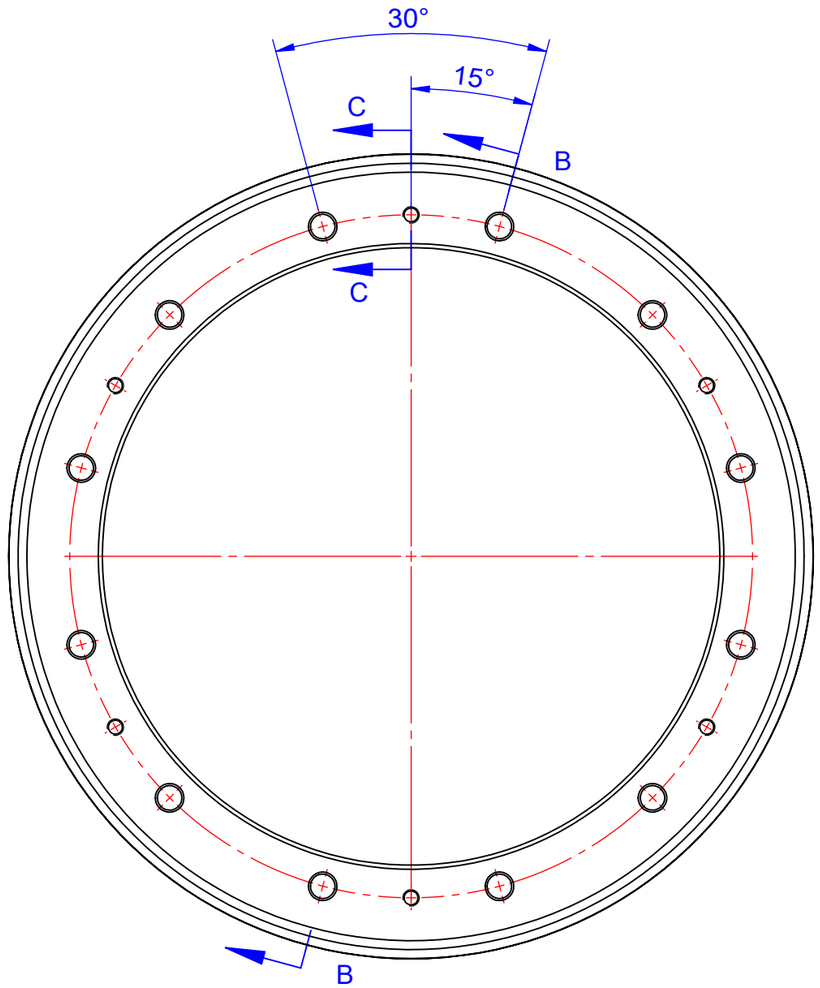

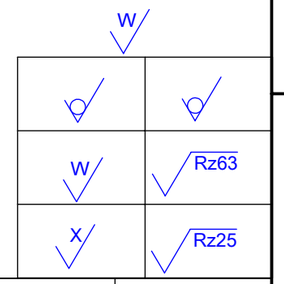

Rev	Description	REV.BY	APP	Date

	Date	Name
Drawn	2014.5.8	Wilson
Checked		
ENG.APPR		
MFG.APPR		

TVD

Tolerances
General ISO 2768 mk
Cast part
Rubber part
Toleranz of welding part

Inspection Dimension

Description

DOV DN450 保持架

Scale 1:3

Drawing number 11-040-1-2702

Page

Weight 4.54kg

Format A3

Language EN