CAUSE AND EFFECT MATRIX

SHUTDOWN / CONTROL ACTION

TAG NO.	ADD. NO.	SERVICE DESCRIPTION (INITIATING DEVICE)	CAL. RANGE	UNITS	SET POINT	ACTION	NOTE	1 ALM – ALARM ANNUNCIATION N/A	2 F&G COMPONENT FAILURE	3 RELEASE CO2 (MAIN) SOV-3059,3060	4 RELEASE CO2 (RESERVE) SOV-3061,3062	5 DISPLAY	6 CO2 RELEASED FPP	7 CO2 INHIBITED FPP	8 ALARM LEL TURBINE ROOM RELAY OUTPUT TO CONTROL SYSTEM FPP	9 SHUTDOWN LEL TURBINE ROOM RELAY OUTPUT TO CONTROL SYSTEM FPP	10 FIRE DETECTED RELAY TO CONTROL SYSTEM FPP	11 FIRE & GAS SYSTEM FAULT RELAY OUTPUT TO CONTROL SYSTEM FPP	12 FIRE & GAS SYSTEM FAULT – ALM SOUND ALERT FPP	13 SOUND FIRE ALARM HORN YSA-3006,3046,3047	14 SILENCE FIRE ALARM HORN YSA-3006,3046,3047	15 ACTIVATE FIRE ALARM WARNING BEACONS YSL-3036,3041,3042,3043	16 RESET STROBE LIGHTS AFTER CO2 DISCHARGE	17 TURBINE ENCLOSURE DOORS OPEN FPP	18 CRITICAL PATH SHUTDOWN – DEENERGIZE FOR SHUTDOWN FPP	19 TURBINE/GENERATOR VENT FANS SHUTDOWN GE CONTROL SYSTEM	20 CUSTOMER GENERAL ALARM RELAY	21 CUSTOMER FAULT RELAY	22 CUSTOMER BLOCK VALVE RELAY
AE-3004	#20	TURBINE COMPARTMENT GAS LEVEL			15	AH		X							X					X		X					X		
AE-3004		TURBINE COMPARTMENT GAS LEVEL			25	AHH		X								X				X		X			X				
AE-3004		TURBINE COMPARTMENT GAS LEVEL	T OR F		F	SF	3	X	X									X	X									X	
AE-3004		TURBINE COMPARTMENT GAS LEVEL	0-100	%		DISPLAY						X																	
AE-3007	#21	TURBINE COMPARTMENT GAS LEVEL			15	AH		X							X					X		X					X		
AE-3007		TURBINE COMPARTMENT GAS LEVEL			25	AHH		X								X				X		X			X				
AE-3007		TURBINE COMPARTMENT GAS LEVEL	T OR F		F	SF	3	X	X									X	X									X	
AE-3007		TURBINE COMPARTMENT GAS LEVEL	0-100	%		DISPLAY						X																	
AE-3015	#22	TURBINE COMPARTMENT GAS LEVEL			15	AH		X							X					X		X					X		
AE-3015		TURBINE COMPARTMENT GAS LEVEL			25	AHH		X								X				X		X			X				
AE-3015		TURBINE COMPARTMENT GAS LEVEL	T OR F		F	SF	3	X	X									X	X									X	
AE-3015		TURBINE COMPARTMENT GAS LEVEL	0-100	%		DISPLAY						X																	
AE-3029	#30	TURBINE COMPARTMENT OUTLET IR GAS DETECTOR			5	AH		X							X					X		X					X		
AE-3029		TURBINE COMPARTMENT OUTLET IR GAS DETECTOR			10	AHH		X								X				X		X			X				
AE-3029		TURBINE COMPARTMENT OUTLET IR GAS DETECTOR	T OR F		F	SF	3	X	X									X	X									X	
AE-3029		TURBINE COMPARTMENT OUTLET IR GAS DETECTOR	0-100	%		DISPLAY						X																	
AE-3030	#31	TURBINE COMPARTMENT OUTLET IR GAS DETECTOR			5	AH		X							X					X		X					X		
AE-3030		TURBINE COMPARTMENT OUTLET IR GAS DETECTOR			10	AHH		X								X				X		X			X				
AE-3030		TURBINE COMPARTMENT OUTLET IR GAS DETECTOR	T OR F		F	SF	3	X	X									X	X									X	
AE-3030		TURBINE COMPARTMENT OUTLET IR GAS DETECTOR	0-100	%		DISPLAY						X																	
AE-3031	#32	TURBINE COMPARTMENT OUTLET IR GAS DETECTOR			5	AH		X							X					X		X					X		
AE-3031		TURBINE COMPARTMENT OUTLET IR GAS DETECTOR			10	AHH		X								X				X		X			X				
AE-3031		TURBINE COMPARTMENT OUTLET IR GAS DETECTOR	T OR F		F	SF	3	X	X									X	X									X	
AE-3031		TURBINE COMPARTMENT OUTLET IR GAS DETECTOR	0-100	%		DISPLAY						X																	
BE-3000	#40	TURBINE COMPARTMENT OPTICAL FLAME DETECTOR	T OR F				1,2	X		X	X		X				X					X			X				
BE-3000		TURBINE COMPARTMENT OPTICAL FLAME DETECTOR	T OR F			SF	3	X	X									X	X									X	
BE-3016	#44	TURBINE COMPARTMENT OPTICAL FLAME DETECTOR	T OR F				1,2	X		X	X		X				X			X		X			X				
BE-3016		TURBINE COMPARTMENT OPTICAL FLAME DETECTOR	T OR F			SF	3	X	X									X	X									X	
BE-3017	#45	TURBINE COMPARTMENT OPTICAL FLAME DETECTOR	T OR F				1,2	X		X	X		X				X			X		X			X				
BE-3017		TURBINE COMPARTMENT OPTICAL FLAME DETECTOR	T OR F			SF	3	X	X									X	X									X	
BE-3080	#46	TURBINE COMPARTMENT OPTICAL FLAME DETECTOR	T OR F			SF	3	X	X									X	X									X	
BE-3080		TURBINE COMPARTMENT OPTICAL FLAME DETECTOR	T OR F			SF	3	X	X									X	X									X	
BE-3081	#47	TURBINE COMPARTMENT OPTICAL FLAME DETECTOR	T OR F			SF	3	X	X									X	X									X	
BE-3081		TURBINE COMPARTMENT OPTICAL FLAME DETECTOR	T OR F			SF	3	X	X									X	X									X	
TS-3003	JB19A-2-1	TURBINE COMPARTMENT HEAT DETECTOR	T OR F				1	X		X	X		X				X			X		X			X				
TS-3003		TURBINE COMPARTMENT HEAT DETECTOR	T OR F			SF	3	X	X									X	X									X	
TS-3014	JB19A-2-1	TURBINE COMPARTMENT HEAT DETECTOR	T OR F				1	X		X	X		X				X			X		X			X				
TS-3014		TURBINE COMPARTMENT HEAT DETECTOR	T OR F			SF	3	X	X									X	X									X	
TS-3053	JB19A-2-1	TURBINE COMPARTMENT HEAT DETECTOR	T OR F				1	X		X	X		X				X			X		X			X				
TS-3053		TURBINE COMPARTMENT HEAT DETECTOR	T OR F			SF	3	X	X									X	X									X	
TS-3054	JB19A-2-1	TURBINE COMPARTMENT HEAT DETECTOR	T OR F				1	X		X	X		X				X			X		X			X				
TS-3054		TURBINE COMPARTMENT HEAT DETECTOR	T OR F			SF	3	X	X									X	X									X	
TS-3055	JB19A-2-1	TURBINE COMPARTMENT HEAT DETECTOR	T OR F				1	X		X	X		X				X			X		X			X				
TS-3055		TURBINE COMPARTMENT HEAT DETECTOR	T OR F			SF	3	X	X									X	X									X	
TS-3056	JB19A-2-1	TURBINE COMPARTMENT HEAT DETECTOR	T OR F				1	X		X	X		X				X			X		X			X				
TS-3056		TURBINE COMPARTMENT HEAT DETECTOR	T OR F			SF	3	X	X									X	X									X	
TS-3066	JB19A-2-1	TURBINE COMPARTMENT HEAT DETECTOR	T OR F				1	X		X	X		X				X			X		X			X				
TS-3066		TURBINE COMPARTMENT HEAT DETECTOR	T OR F			SF	3	X	X									X	X									X	
TS-3067	JB19A-2-1	TURBINE COMPARTMENT HEAT DETECTOR (P TUNNEL)	T OR F				1	X		X	X		X				X			X		X			X				
TS-3067		TURBINE COMPARTMENT HEAT DETECTOR (P TUNNEL)	T OR F			SF	3	X	X									X	X									X	
TS-3068	JB19A-2-1	TURBINE COMPARTMENT HEAT DETECTOR (P TUNNEL)	T OR F				1	X		X	X		X				X	X	X	X		X			X			X	
TS-3068		TURBINE COMPARTMENT HEAT DETECTOR (P TUNNEL)	T OR F			SF	3	X	X																				
HS-3070	JB19A-1-1	CO2 MANUAL RELEASE BUTTON	T OR F				4	X		X	X		X				X			X		X			X				
HS-3071	JB19A-1-1	CO2 MANUAL RELEASE BUTTON	T OR F				4	X		X	X		X				X			X		X			X				
HS-3072	JB19A-1-1	CO2 MANUAL RELEASE BUTTON	T OR F				4	X		X	X		X				X			X		X			X				
HS-3073	JB19A-1-1	CO2 MANUAL RELEASE BUTTON	T OR F				4	X		X	X		X				X			X		X			X				
HS-3074	JB19A-1-1	CO2 MANUAL RELEASE BUTTON	T OR F				4	X		X	X		X				X			X		X			X				
HS-3075	JB19A-1-1	CO2 MANUAL RELEASE BUTTON	T OR F				4	X		X	X		X				X			X		X			X				
HS-3076	JB19A-1-1	CO2 MANUAL RELEASE BUTTON	T OR F				4	X		X	X		X				X			X		X			X				
HS-3077	JB19A-1-1	CO2 MANUAL RELEASE BUTTON	T OR F				4	X		X	X		X				X			X		X			X				
PSHH-3048	JB20-5	CO2 MANIFOLD PRESSURE HIGH HIGH (DOWNSTREAM)	T OR F					X	X	X	X		X						X										
PSH-3057	JB20-8	CO2 MANIFOLD PRESSURE HIGH (UPSTREAM)	T OR F				5	X	X	X	X		X						X	X		X							
SOV-3059	JB20-1	CO2 RELEASE SOV CLOSED (MAIN)	T OR F							X			X																
SOV-3060	JB20-2	CO2 RELEASE SOV CLOSED (MAIN)	T OR F							X			X																
SOV-3061	JB20-3	CO2 RELEASE SOV CLOSED (RESERVE)	T OR F								X		X																
SOV-3062	JB20-4	CO2 RELEASE SOV CLOSED (RESERVE)	T OR F								X		X																
HS-3063	JB20-6	PURGE ACKNOWLEDGE SWITCH	T OR F																				X						
HS-3040	JB19A-2-2	HORN SILENCE SWITCH	T OR F																		X								
ZSC-3064	JB20-7	CO2 BLOCK VALVE POSITION	T OR F						X					X				X	X								X	X	X
N/A	N/A	FIRE & GAS PANEL POWER SUPPLY FAULT	T OR F					X	X									X	X						X			X	
N/A	N/A	SINGLE OPTICAL FIRE SENSOR FAULT	T OR F															X	X									X	
N/A	N/A	MULTIPLE OPTICAL FIR SENSOR FAULT	T OR F															X	X									X	
N/A	N/A	SINGLE GAS SENSOR FAULT WITHIN SAME GROUP	T OR F															X	X									X	
N/A	N/A	MULTIPLE GAS SENSOR FAULT WITHIN SAME GROUP	T OR F															X	X									X	
N/A	N/A	CO2 GAS RELEASED	T OR F																							X			

NOTES

1. FOR PERSONNEL SAFETY
2. ACTION ONLY WHEN CONFIRMED FIRE ON 2 OR MORE OPTICAL FLAME DETECTORS. SINGLE SENSOR DETECTION TO INITIATE ALARM ONLY.
3. SF IN EGD(ETHERNET GLOBAL DATA) LIST FOR SCREEN ANIMATION. INDIVIDUAL HMI ALARM IS GENERATED IN TCI (TURBINE CONTROL INTERFACE).
4. CO2 MANUAL RELEASE BUTTONS ARE WIRED.
   798254 Fire and Gas Detection Systems F&iDs.
   698746 Instrument Loop Diagrams.
   729693 Sensor Layout.
   698768 Critical Loop Wiring Diagram.
   698051 FPP Logic Flow Diagram.
5. ALARM CONDITION ONLY.

DRAWING SHEET APPLIES TO ALL UNITS

GE Mfg. No.	Hand	Unit No.
7264807	LH	2

REVISIONS

REV	DESCRIPTION	DATE	BY
0	ISSUED FOR APPROVAL	01/07/16	MAP
1	REVISED PER CUSTOMER COMMENTS	02/05/16	MAP
2	REVISED PER CUSTOMER COMMENTS	07/11/16	JG
3	REVISED PER CUSTOMER COMMENTS	09/28/16	JG
4	REVISED PER CUSTOMER COMMENTS	11/17/16	JG
5	REVISED PER CUSTOMER COMMENTS	01/24/17	JG

THIS DRAWING, DESIGN AND THE DATA CONTAINED THEREIN IS THE PROPERTY OF WILSON FIRE EQUIPMENT AND IS NOT TO BE DISTRIBUTED TO OR USED BY OTHERS WITHOUT THE EXPRESSED WRITTEN CONSENT OF WILSON FIRE EQUIPMENT.

SCALE: AS SHOWN

		DATE
DRAWN:	MAP	01/07/16
CHECKED:	LMW	01/24/17
APPROVED:	LMW	01/24/17

WILSON FIRE EQUIPMENT & SERVICE CO.
7303 EMPIRE CENTRAL DRIVE HOUSTON, TEXAS 77040 (713) 896-4747

CUSTOMER INFORMATION

GE PACKAGED POWER L.P. 7264807

LMS100 60HZ
EXELON PROJECT

FIRE & GAS PANEL – CAUSE AND EFFECT CHART
FIRE DETECTION / CO2 SUPPRESSION SYSTEM
WFE PROJECT # GE-1378

SIZE	DRAWING NO.	REV
B	CE-1378-01	5
	SHEET 1 OF 1	

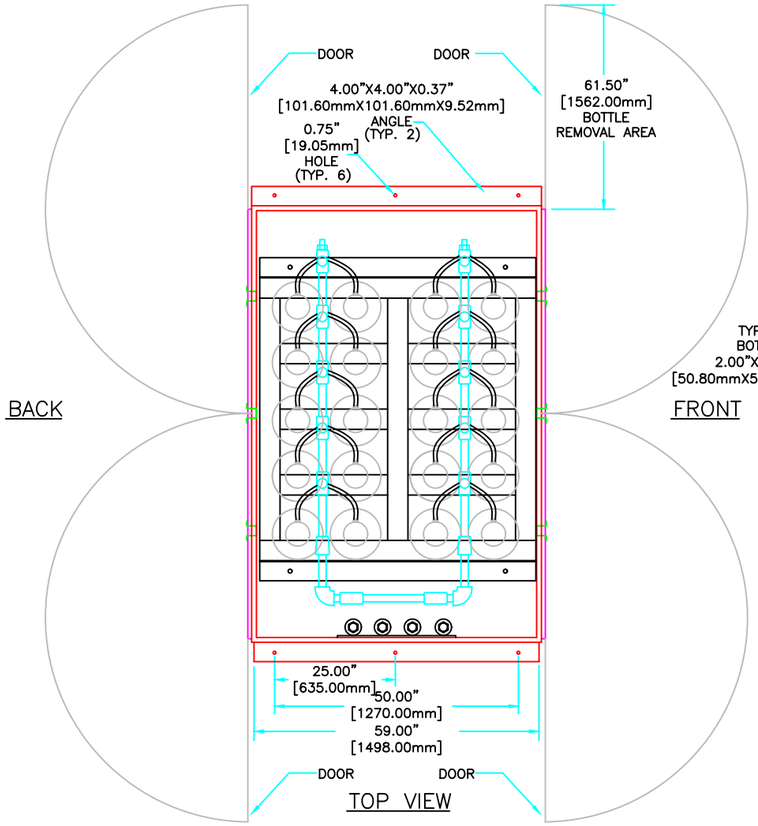

TOP VIEW

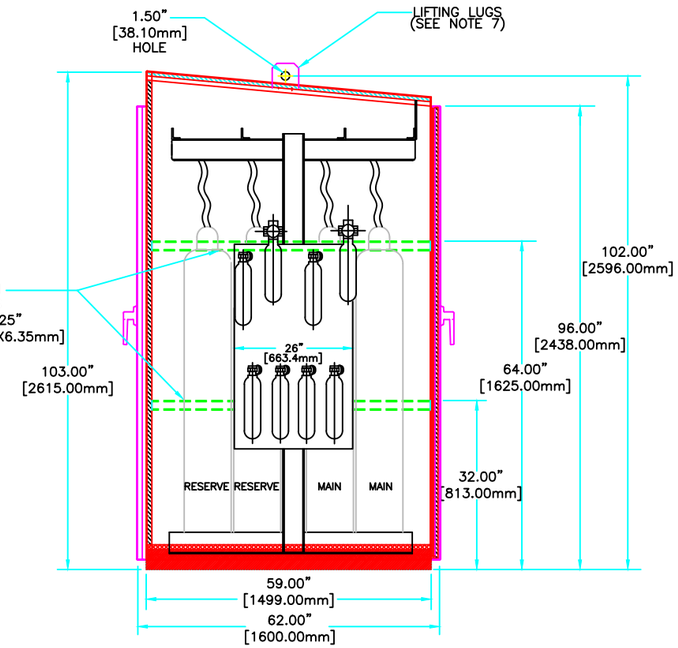

SIDE VIEW

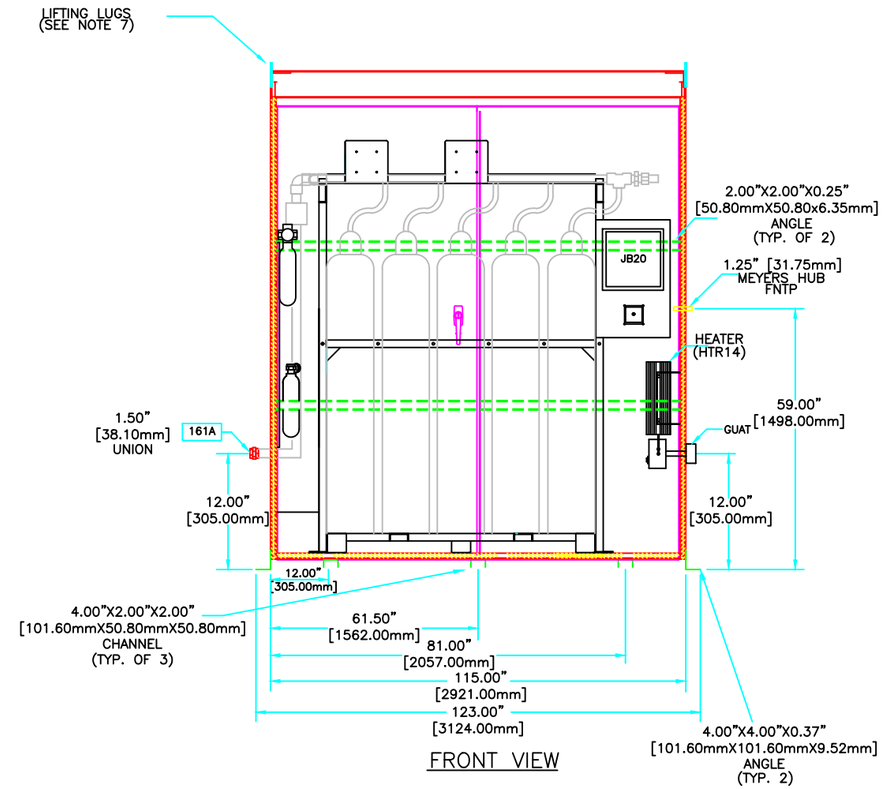

FRONT VIEW

NOTES:

1. CONSTRUCTION TO BE NEMA 3, FABRICATED FROM 12 GAUGE PICKLED AND OILED STEEL.
2. FINISH TO BE RED POWDER COAT.
3. STICK PINS ARE TO BE ARRANGED IN A 1'–0" X 1'–0" [304.80mmX304.80mm] GRID.
4. ENCLOSURES WILL HAVE A 1" GRATING IN THE BOTTOM OF THE ENCLOSURE.
5. COLD WEATHER ENCLOSURES WILL COME WITH CO2 RACK INSTALLED INSIDE.
6. COLD WEATHER ENCLOSURES WILL COME INSULATED AND WITH A 1500 W, 208V, 1PH HEATER.
7. LIFTING LUGS ARE TO BE USED FOR EMPTY ENCLOSURE ONLY, DO NOT LIFT WITH CYLINDERS INSIDE ENCLOSURE.
8. TOLERANCE ON FLANGE CONNECTIONS ±0.12" [3.04mm].
9. DIMENSIONS AND VALUES IN [ ] ARE SI UNITS AND ARE GIVEN FOR REFERENCE ONLY. EQUIPMENT WILL BE DESIGNED AND MANUFACTURED USING ENGLISH UNITS ONLY.
10. 2.00"X2.00"X0.25" [51mmX51mmX6mm] ANGLES IS TYPICAL ON BACK OF PANEL.
11. TOLERANCES:
    LINEAR DIMENSION ±0.12" [3.04mm].
    ANGULAR ±0.5

ENCLOSURE WEIGHT – 1900 lbs. [861.82kg]
ENCLOSURE WEIGHT W/ BOTTLES
AND RACK ASSEMBLY – 8800 lbs. [3991.61kg]

DRAWING SHEET APPLIES TO ALL UNITS

GE Mfg. No.	Hand	Unit No.
7264807	LH	2

REVISIONS

REV	DESCRIPTION	DATE	BY
0	ISSUED FOR APPROVAL	01/07/16	MAP
1	REVISED PER CUSTOMER COMMENTS	02/05/16	MAP
2	REVISED PER CUSTOMER COMMENTS	07/11/16	JG
3	REVISED PER CUSTOMER COMMENTS	09/28/16	JG
4	REVISED PER CUSTOMER COMMENTS	11/17/16	JG
5	REVISED PER CUSTOMER COMMENTS	01/24/17	JG

THIS DRAWING, DESIGN AND THE DATA CONTAINED THEREIN IS THE PROPERTY OF WILSON FIRE EQUIPMENT AND IS NOT TO BE DISTRIBUTED TO OR USED BY OTHERS WITHOUT THE EXPRESSED WRITTEN CONSENT OF WILSON FIRE EQUIPMENT.

SCALE:	AS SHOWN	DATE
DRAWN:	MAP	01/07/16
CHECKED:	LMW	01/24/17
APPROVED:	LMW	01/24/17

WILSON FIRE EQUIPMENT & SERVICE CO.
7303 EMPIRE CENTRAL DRIVE HOUSTON, TEXAS 77040 (713) 896–4747

CUSTOMER INFORMATION

GE PACKAGED POWER L.P. 7264807

LMS100
EXELON PROJECT
20 BOTTLE
COLD WEATHER ENCLOSURE
GENERAL ARRANGEMENT – CO2 SKID
CO2 FIRE PROTECTION SYSTEM
WFE PROJECT # GE–1378

SIZE	DRAWING NO.	REV
B	GA–1378–1 SHEET 1 OF 8	5

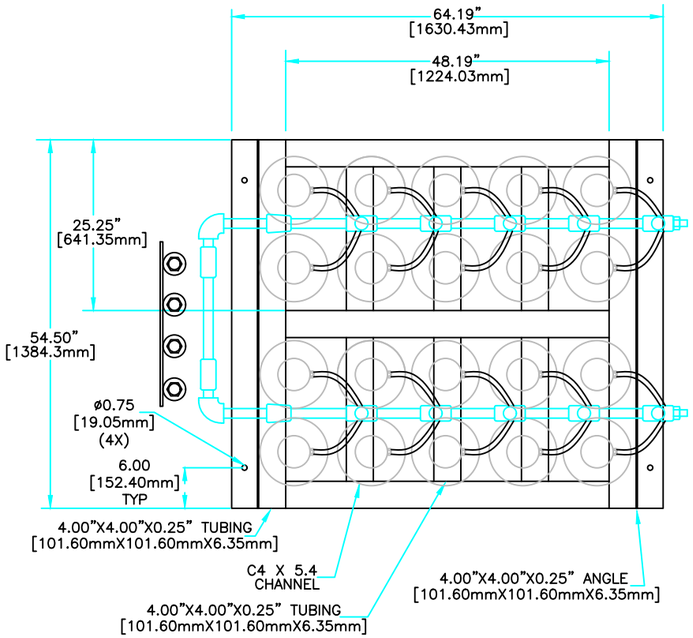

TOP VIEW

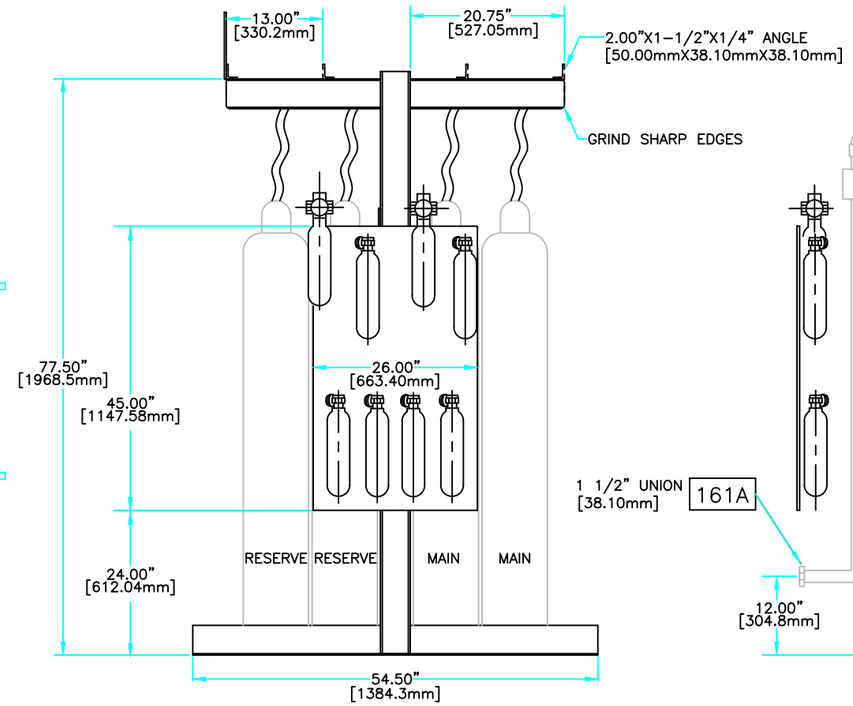

LEFT SIDE VIEW

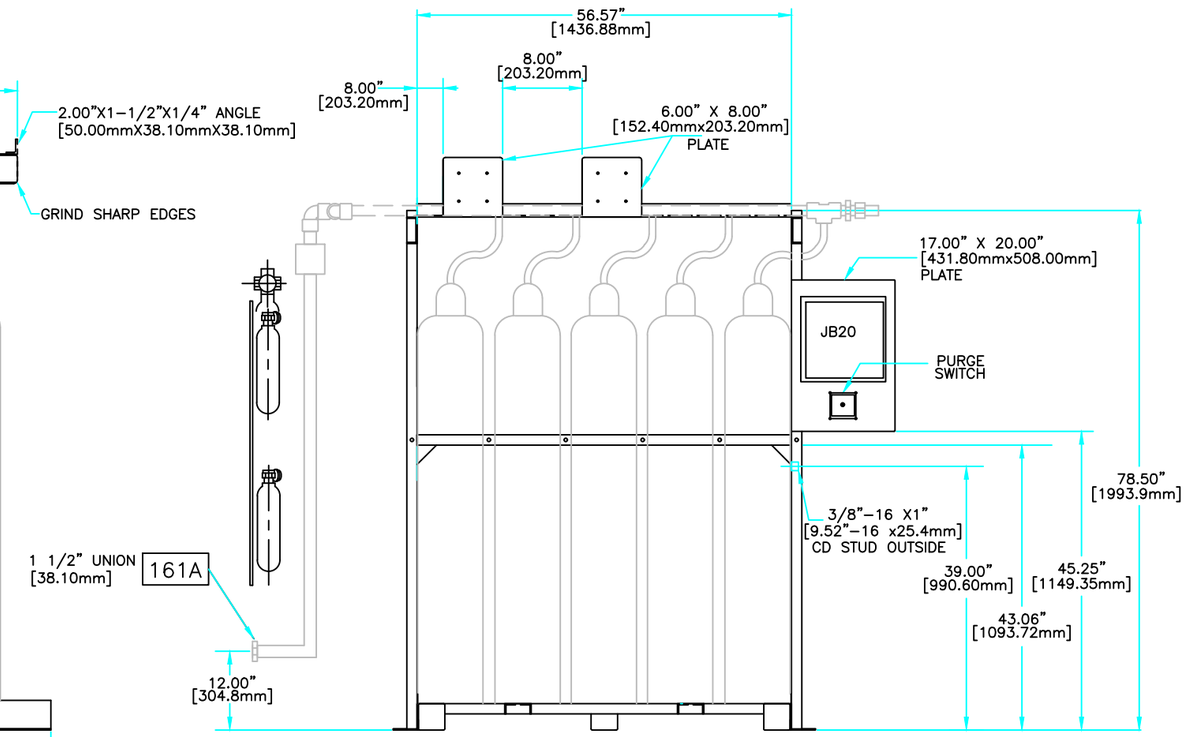

FRONT VIEW

CONNECTION LEGEND:

161A FIRE PROTECTION – CO2, BOTTLE SKID, OUTLET TO MAIN UNIT 1.50"[38.10mm] NPT 3000#

NOTES:

1. WEIGHT OF SKID = 900 LBS. [408.23kg]
   20 BOTTLES @ 300 LBS. [136.07kg] EA. = 6000 LBS. [2721.55kg]
   TOTAL WEIGHT = 6900 LBS. [3129.78kg]
2. RED POWDER COAT FINISH.
3. DIMENSIONS AND VALUES IN [ ] ARE SI UNITS AND ARE GIVEN FOR REFERENCE ONLY. EQUIPMENT WILL BE DESIGNED AND MANUFACTURED USING ENGLISH UNITS ONLY. DIMENSIONS ARE IN INCHES.
4. TOLERANCES:
   FLANGE CONNECTION ± 0.12" [3.17mm]
   LINEAR DIMENSION ± 0.12" [3.17mm]
   ANGULAR ± 0.5
5. RADIUS CORNERS (8) TYPICAL.

DRAWING SHEET APPLIES TO ALL UNITS

GE Mfg. No.	Hand	Unit No.
7264807	LH	2

REVISIONS

REV	DESCRIPTION	DATE	BY
0	ISSUED FOR APPROVAL	01/07/16	MAP
1	REVISED PER CUSTOMER COMMENTS	02/05/16	MAP
2	REVISED PER CUSTOMER COMMENTS	07/11/16	JG
3	REVISED PER CUSTOMER COMMENTS	09/28/16	JG
4	REVISED PER CUSTOMER COMMENTS	11/17/16	JG
5	REVISED PER CUSTOMER COMMENTS	01/24/17	JG

THIS DRAWING, DESIGN AND THE DATA CONTAINED THEREIN IS THE PROPERTY OF WILSON FIRE EQUIPMENT AND IS NOT TO BE DISTRIBUTED TO OR USED BY OTHERS WITHOUT THE EXPRESSED WRITTEN CONSENT OF WILSON FIRE EQUIPMENT.

SCALE:	N.T.S	DATE
DRAWN:	MAP	01/07/16
CHECKED:	LMW	01/24/17
APPROVED:	LMW	01/24/17

WILSON FIRE EQUIPMENT & SERVICE CO.
7303 EMPIRE CENTRAL DRIVE HOUSTON, TEXAS 77040 (713) 896-4747

CUSTOMER INFORMATION

GE PACKAGED POWER L.P. 7264807

LMS100
EXELON PROJECT
20 BOTTLES
NO SUNSHIELD
GENERAL ARRANGEMENT
CO2 FIRE PROTECTION SYSTEM
WFE PROJECT # GE-1378

SIZE	DRAWING NO.	REV
B	GA-1378-2 SHEET 2 OF 8	5

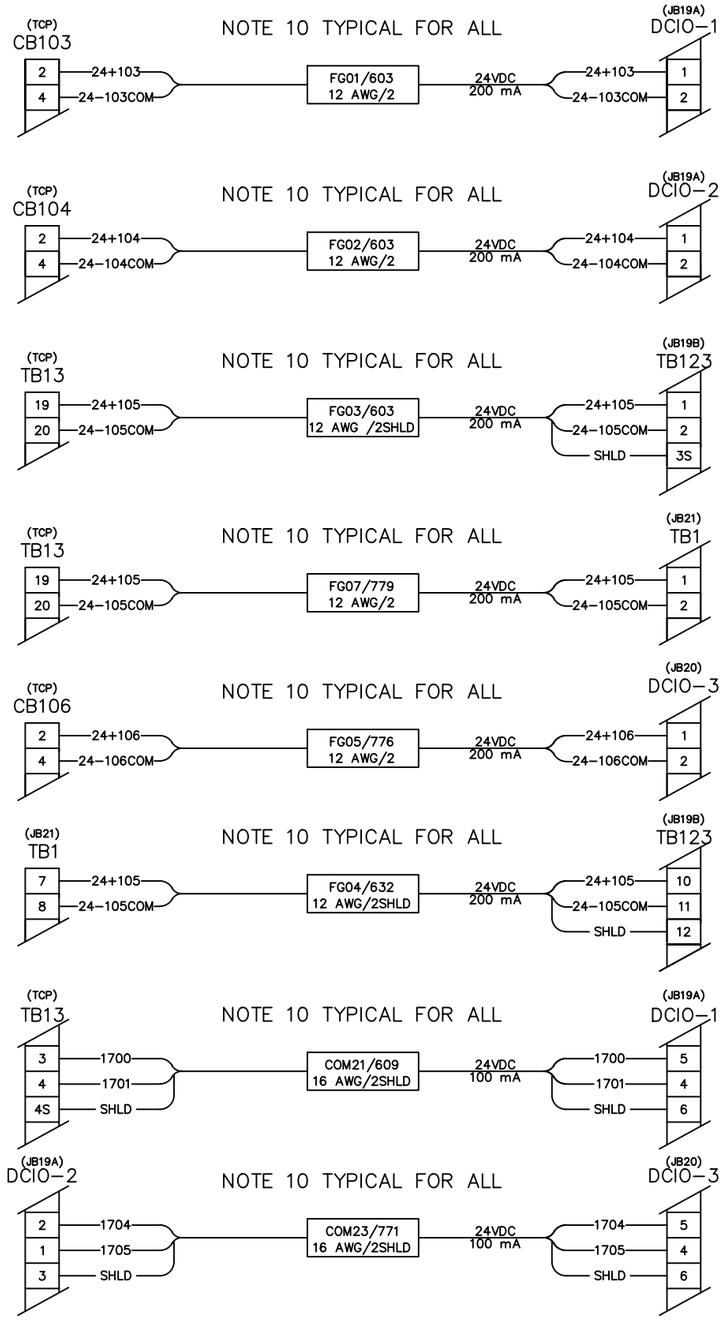

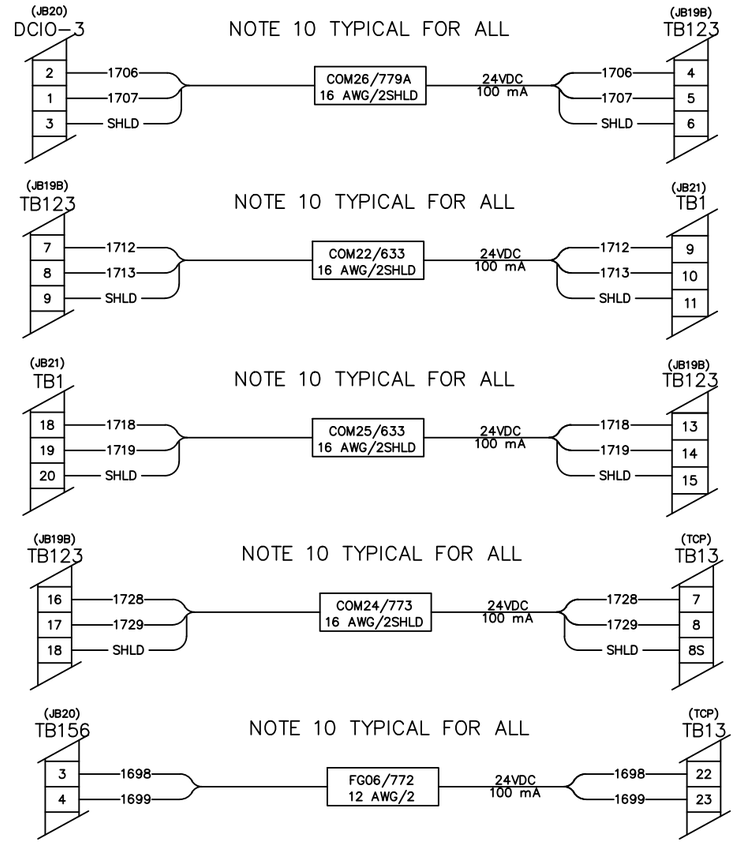

NOTES:

1__ WIRES, MATERIALS, AND CONSTRUCTION SHALL CONFORM TO ALL RELEVANT NORTH AMERICAN STANDARDS
2__ JUMPER MUST BE INSTALLED FOR PROPER OPERATION. USE 16 AWG WIRE
3__ WIRE SIZED FOR 100 METERS IN LENGTH
4__ USE 16 AWG 28.86 PF/m TWISTED PAIR SHIELDED CABLE OR EQUAL. KEEP CABLE LENGTH TO 100m OR LESS FOR PROPER OPERATION.
5__ INSURE JUNCTION WIRES ARE 14 AWG (BY OTHERS)
6__ 14 AWG JUMPER WIRE (BY OTHERS)
7__ CABLE CANNOT BE MORE THAN 100 METERS LONG. OTHER MEANS MUST BE USED IF A GREATER DISTANCE IS REQUIRED. (BY OTHERS)
8__ SHIELDED PAIR USED ON PLC TERMINALS 15 THRU 23 OVER ALL SHIELD ON PLC TERMINAL 34. (BY OTHERS)
9__ SHIELDED PAIR USED ON PLC TERMINALS 45 THRU 59 OVER ALL SHIELD ON PLC TERMINAL 60. (BY OTHERS)
10__ FIRE PROTECTION CABLES SHOULD BE SEGREGATED AS FAR AS POSSIBLE FROM OTHER CABLES. (BY OTHERS)
11__ ALL SHIELDING WILL HAVE A MAXIMUM 2in. (50.8mm) EXPOSED UNSHIELDED LENGTH OF WIRE AT TERMINAL END. (BY OTHERS)
12__ THE CUSTOMER IS ADVISED TO MAKE ALLOWANCES FOR CABLE LENGTHS GREATER THAN 330 FEET (100 METERS) SO AS TO LIMIT THE VOLTAGE DROPS TO A 3% MAXIMUM. (BY OTHERS)
13__ IDENTIFIES CONDUCTORS THAT SHALL BE ROUTED WITH SEGREGATION FROM ALL OTHER CONDUCTORS CONFORMS TO IEC STANDARD EN60204-1. SEGREGATION SHALL BE MAINTAINED WITH BARRIER, OR >2 INCHES[51mm] WITHOUT BARRIER WHERE POSSIBLE. (BY OTHERS)
14__ ALL (PE) PROTECTIVE EARTH WIRES WILL BE GRN/YEL IN COLOR. (BY OTHERS)

WIRE GAUGE CONVERSION TABLE
(AMERICAN WIRE GAUGE-METRIC)

US Standard AWG	NEAREST AVAILABLE CROSS-SECTION mm^2
22	0.5
18	0.75
16	1.5
14	2.5
12	4.0
10	6.0
8	10.0
6	16.0
4	25.0
2	35.0

DRAWING SHEET APPLIES TO ALL UNITS

GE Mfg. No.	Hand	Unit No.
7264807	LH	2

REVISIONS

REV	DESCRIPTION	DATE	BY
0	ISSUED FOR APPROVAL	01/07/16	MAP
1	REVISED PER CUSTOMER COMMENTS	02/05/16	MAP
2	REVISED PER CUSTOMER COMMENTS	07/11/16	MAP
3	REVISED PER CUSTOMER COMMENTS	09/28/16	JG
4	REVISED PER CUSTOMER COMMENTS	11/17/16	JG
5	REVISED PER CUSTOMER COMMENTS	01/24/17	JG

THIS DRAWING, DESIGN AND THE DATA CONTAINED THEREIN IS THE PROPERTY OF WILSON FIRE EQUIPMENT AND IS NOT TO BE DISTRIBUTED TO OR USED BY OTHERS WITHOUT THE EXPRESSED WRITTEN CONSENT OF WILSON FIRE EQUIPMENT.

SCALE:	AS SHOWN	DATE
DRAWN:	MAP	01/07/16
CHECKED:	LMW	01/24/17
APPROVED:	LMW	01/24/17

WILSON FIRE EQUIPMENT & SERVICE CO.
7303 EMPIRE CENTRAL DRIVE HOUSTON, TEXAS 77040 (713) 896-4747

CUSTOMER INFORMATION
GE PACKAGE POWER LP. 7264807

LMS100 60HZ
EXELON PROJECT

CUSTOMER INTERCONNECT WIRING
FIRE AND GAS PROTECTION
WFE PROJECT # GE-1378

SIZE	DRAWING NO.	REV
B	IW-1378-01 SHEET 1 OF 1	5

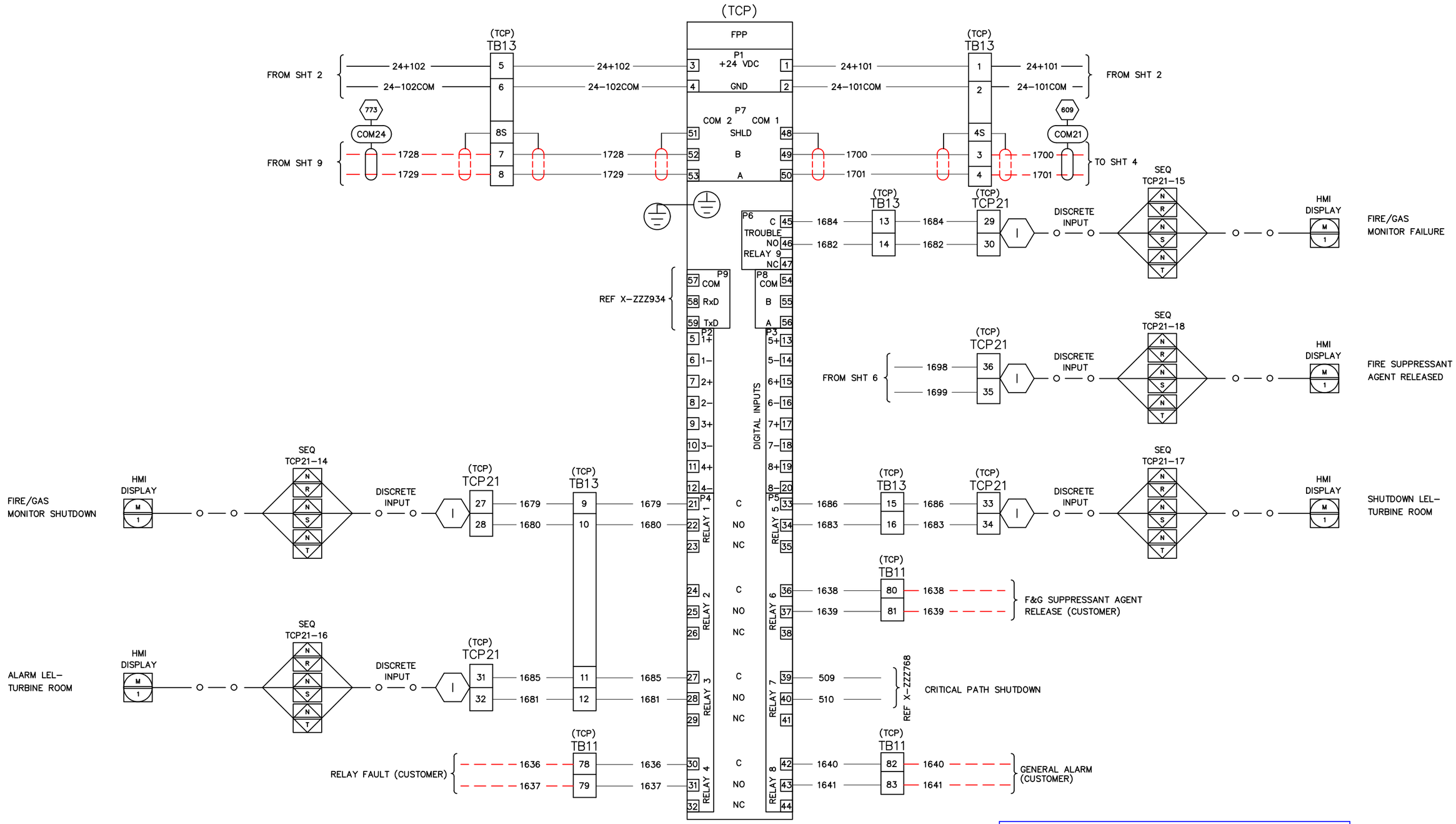

DRAWING SHEET APPLIES TO ALL UNITS

GE Mfg. No.	Hand	Unit No.
7264807	LH	2

REVISIONS

REV	DESCRIPTION	DATE	BY
0	ISSUED FOR APPROVAL	01/07/16	MAP
1	REVISED PER CUSTOMER COMMENTS	02/05/16	MAP
2	REVISED PER CUSTOMER COMMENTS	07/11/16	JG
3	REVISED PER CUSTOMER COMMENTS	09/28/16	JG
4	REVISED PER CUSTOMER COMMENTS	11/17/16	JG
5	REVISED PER CUSTOMER COMMENTS	01/24/17	JG

THIS DRAWING, DESIGN AND THE DATA CONTAINED THEREIN IS THE PROPERTY OF WILSON FIRE EQUIPMENT AND IS NOT TO BE DISTRIBUTED TO OR USED BY OTHERS WITHOUT THE EXPRESSED WRITTEN CONSENT OF WILSON FIRE EQUIPMENT.

SCALE:	AS SHOWN	DATE
DRAWN:	MAP	01/07/16
CHECKED:	LMW	01/24/17
APPROVED:	LMW	01/24/17

WILSON FIRE EQUIPMENT & SERVICE CO.
7303 EMPIRE CENTRAL DRIVE HOUSTON, TEXAS 77040 (713) 896-4747

CUSTOMER INFORMATION

GE PACKAGED POWER L.P. 7264807

LMS100 60HZ
EXELON PROJECT

SYSTEM WIRING – CONTROL PANEL
FIRE DETECTION / CO2 SUPPRESSION SYSTEM
WFE PROJECT # GE-1378

SIZE	DRAWING NO.	REV
B	SW-1378-03 SHEET 3 OF 15	5

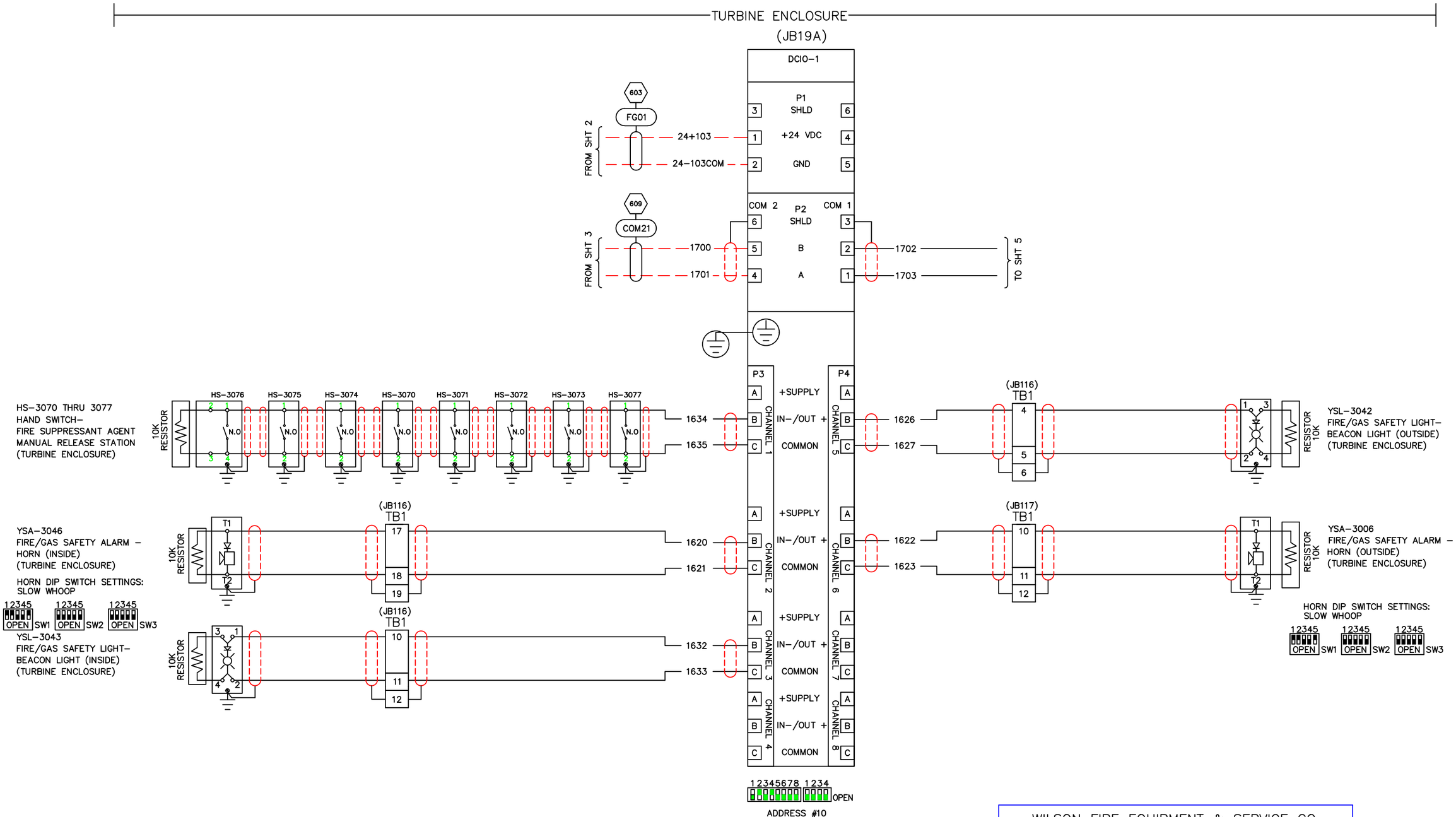

DRAWING SHEET APPLIES TO ALL UNITS

GE Mfg. No.	Hand	Unit No.
7264807	LH	2

REVISIONS

REV	DESCRIPTION	DATE	BY
0	ISSUED FOR APPROVAL	01/07/16	MAP
1	REVISED PER CUSTOMER COMMENTS	02/05/16	MAP
2	REVISED PER CUSTOMER COMMENTS	07/11/16	JG
3	REVISED PER CUSTOMER COMMENTS	09/28/16	JG
4	REVISED PER CUSTOMER COMMENTS	11/17/16	JG
5	REVISED PER CUSTOMER COMMENTS	01/24/17	JG

THIS DRAWING, DESIGN AND THE DATA CONTAINED THEREIN IS THE PROPERTY OF WILSON FIRE EQUIPMENT AND IS NOT TO BE DISTRIBUTED TO OR USED BY OTHERS WITHOUT THE EXPRESSED WRITTEN CONSENT OF WILSON FIRE EQUIPMENT.

SCALE:	AS SHOWN	DATE
DRAWN:	MAP	01/07/16
CHECKED:	LMW	01/24/17
APPROVED:	LMW	01/24/17

WILSON FIRE EQUIPMENT & SERVICE CO.
7303 EMPIRE CENTRAL DRIVE HOUSTON, TEXAS 77040 (713) 896-4747

CUSTOMER INFORMATION

GE PACKAGED POWER L.P. 7264807

LMS100 60HZ
EXELON PROJECT

SYSTEM WIRING - DCIO-1
FIRE DETECTION / CO2 SUPPRESSION SYSTEM
WFE PROJECT # GE-1378

SIZE	DRAWING NO.	REV
B	SW-1378-04 SHEET 4 OF 15	5

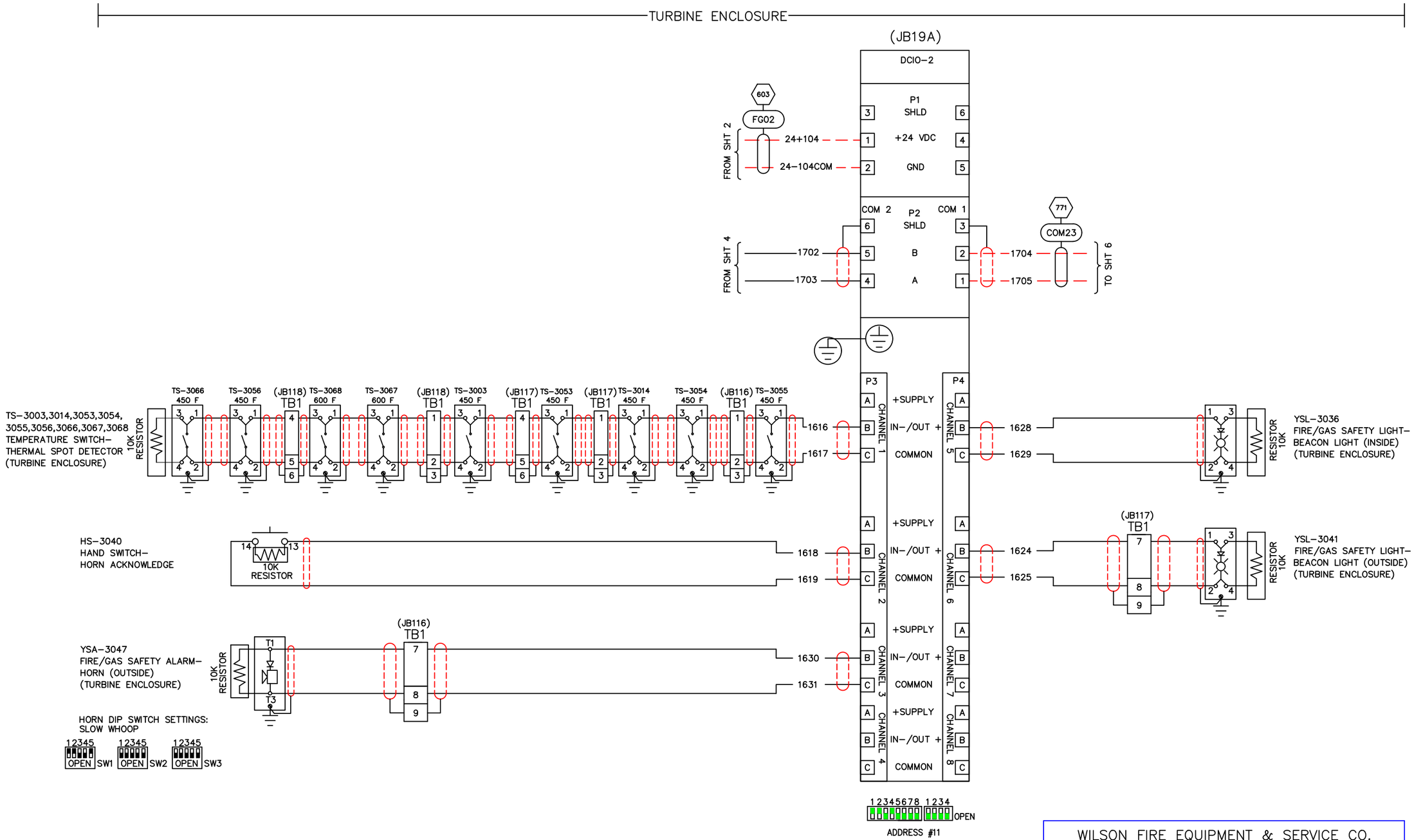

DRAWING SHEET APPLIES TO ALL UNITS

GE Mfg. No.	Hand	Unit No.
7264807	LH	2

REVISIONS

REV	DESCRIPTION	DATE	BY
0	ISSUED FOR APPROVAL	01/07/16	MAP
1	REVISED PER CUSTOMER COMMENTS	02/05/16	MAP
2	REVISED PER CUSTOMER COMMENTS	07/11/16	JG
3	REVISED PER CUSTOMER COMMENTS	09/28/16	JG
4	REVISED PER CUSTOMER COMMENTS	11/17/16	JG
5	REVISED PER CUSTOMER COMMENTS	01/24/17	JG

THIS DRAWING, DESIGN AND THE DATA CONTAINED THEREIN IS THE PROPERTY OF WILSON FIRE EQUIPMENT AND IS NOT TO BE DISTRIBUTED TO OR USED BY OTHERS WITHOUT THE EXPRESSED WRITTEN CONSENT OF WILSON FIRE EQUIPMENT.

SCALE:	AS SHOWN	DATE
DRAWN:	MAP	01/07/16
CHECKED:	LMW	01/24/17
APPROVED:	LMW	01/24/17

WILSON FIRE EQUIPMENT & SERVICE CO.
7303 EMPIRE CENTRAL DRIVE HOUSTON, TEXAS 77040 (713) 896-4747

CUSTOMER INFORMATION

GE PACKAGED POWER L.P. 7264807

LMS100 60HZ
EXELON PROJECT

SYSTEM WIRING – DCIO-2
FIRE DETECTION / CO2 SUPPRESSION SYSTEM
WFE PROJECT # GE-1378

SIZE	DRAWING NO.	REV
B	SW-1378-05 SHEET 5 OF 15	5

CO2 SKID

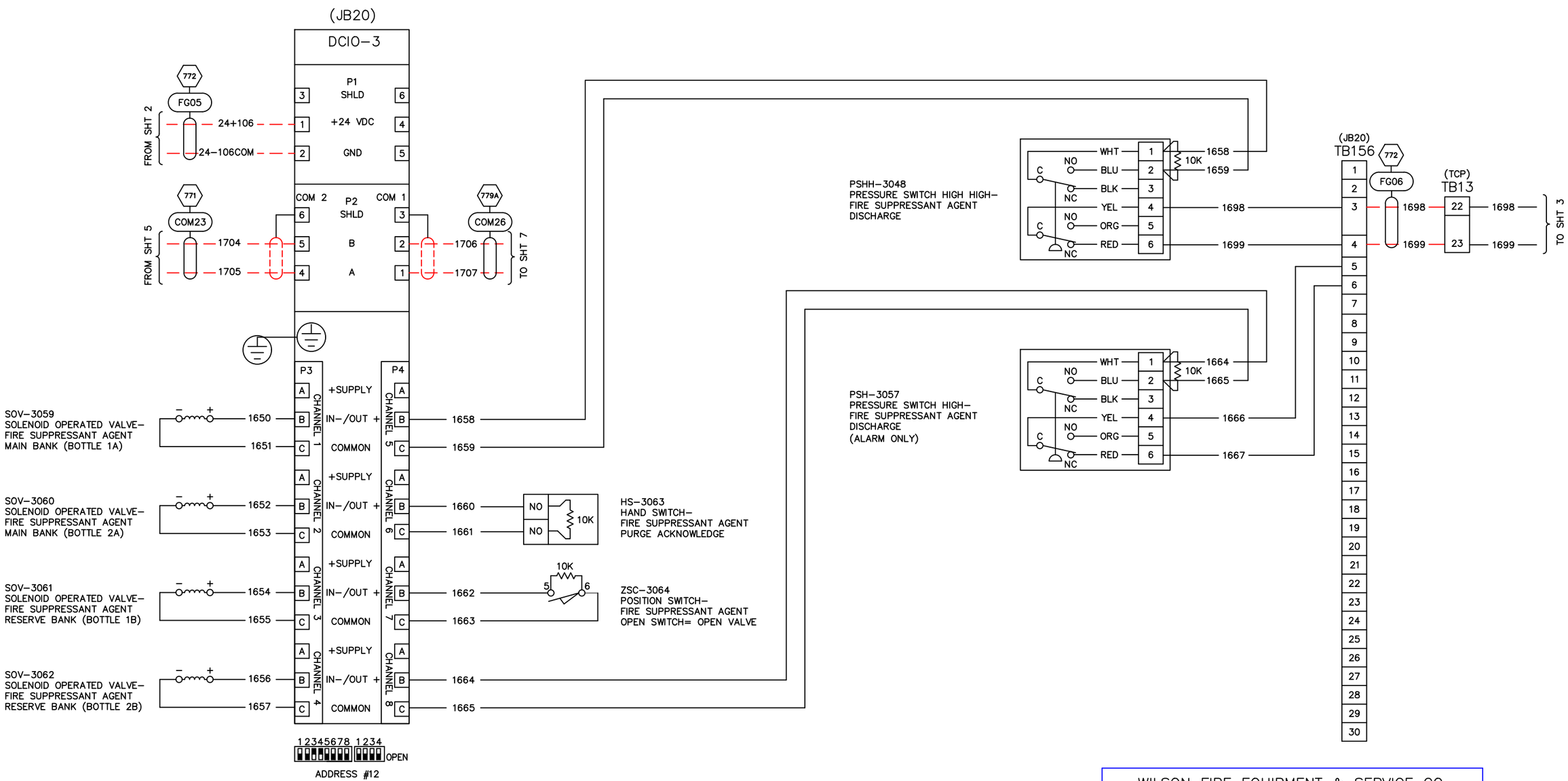

DRAWING SHEET APPLIES TO ALL UNITS

GE Mfg. No.	Hand	Unit No.
7264807	LH	2

REVISIONS

REV	DESCRIPTION	DATE	BY
0	ISSUED FOR APPROVAL	01/07/16	MAP
1	REVISED PER CUSTOMER COMMENTS	02/05/16	MAP
2	REVISED PER CUSTOMER COMMENTS	07/11/16	JG
3	REVISED PER CUSTOMER COMMENTS	09/28/16	JG
4	REVISED PER CUSTOMER COMMENTS	11/17/16	JG
5	REVISED PER CUSTOMER COMMENTS	01/24/17	JG

THIS DRAWING, DESIGN AND THE DATA CONTAINED THEREIN IS THE PROPERTY OF WILSON FIRE EQUIPMENT AND IS NOT TO BE DISTRIBUTED TO OR USED BY OTHERS WITHOUT THE EXPRESSED WRITTEN CONSENT OF WILSON FIRE EQUIPMENT.

SCALE:	AS SHOWN	DATE
DRAWN:	MAP	01/07/16
CHECKED:	LMW	01/24/17
APPROVED:	LMW	01/24/17

WILSON FIRE EQUIPMENT & SERVICE CO.
7303 EMPIRE CENTRAL DRIVE HOUSTON, TEXAS 77040 (713) 896-4747

CUSTOMER INFORMATION

GE PACKAGED POWER L.P. 7264807

LMS100 60HZ
EXELON PROJECT

SYSTEM WIRING – DCIO-3
FIRE DETECTION / CO2 SUPPRESSION SYSTEM
WFE PROJECT # GE-1378

SIZE	DRAWING NO.	REV
B	SW-1378-06 SHEET 6 OF 15	5

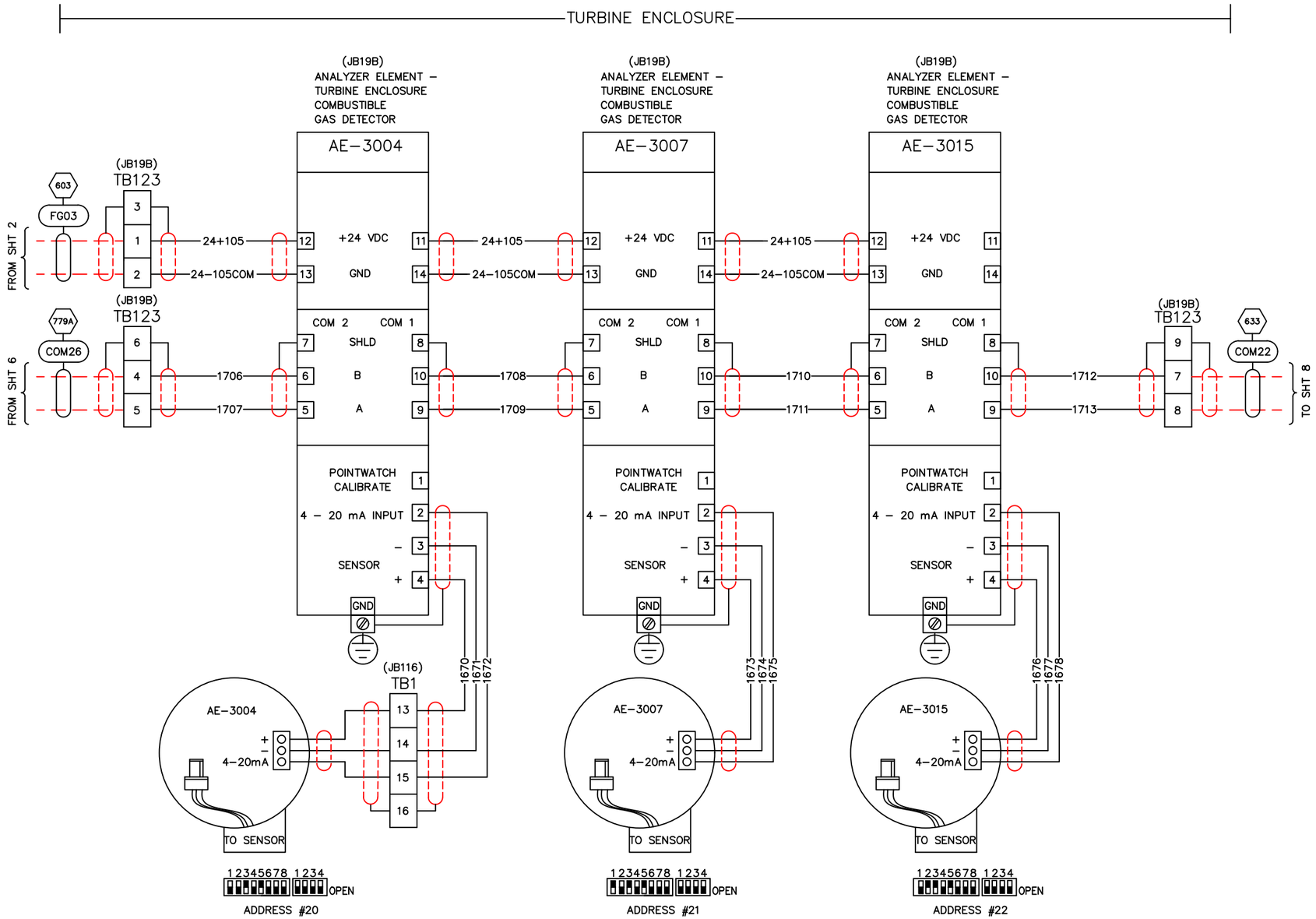

DRAWING SHEET APPLIES TO ALL UNITS

GE Mfg. No.	Hand	Unit No.
7264807	LH	2

REVISIONS

REV	DESCRIPTION	DATE	BY
0	ISSUED FOR APPROVAL	01/07/16	MAP
1	REVISED PER CUSTOMER COMMENTS	02/05/16	MAP
2	REVISED PER CUSTOMER COMMENTS	07/11/16	JG
3	REVISED PER CUSTOMER COMMENTS	09/28/16	JG
4	REVISED PER CUSTOMER COMMENTS	11/17/16	JG
5	REVISED PER CUSTOMER COMMENTS	01/24/17	JG

THIS DRAWING, DESIGN AND THE DATA CONTAINED THEREIN IS THE PROPERTY OF WILSON FIRE EQUIPMENT AND IS NOT TO BE DISTRIBUTED TO OR USED BY OTHERS WITHOUT THE EXPRESSED WRITTEN CONSENT OF WILSON FIRE EQUIPMENT.

SCALE:	AS SHOWN	DATE
DRAWN:	MAP	01/07/16
CHECKED:	LMW	01/24/17
APPROVED:	LMW	01/24/17

WILSON FIRE EQUIPMENT & SERVICE CO.
7303 EMPIRE CENTRAL DRIVE HOUSTON, TEXAS 77040 (713) 896–4747

CUSTOMER INFORMATION

GE PACKAGED POWER L.P. 7264807

LMS100 60HZ
EXELON PROJECT

SYSTEM WIRING – INSTRUMENT LOOP DIAGRAM
FIRE DETECTION / CO2 SUPPRESSION SYSTEM
WFE PROJECT # GE–1378

SIZE	DRAWING NO.	REV
B	SW–1378–07 SHEET 7 OF 15	5

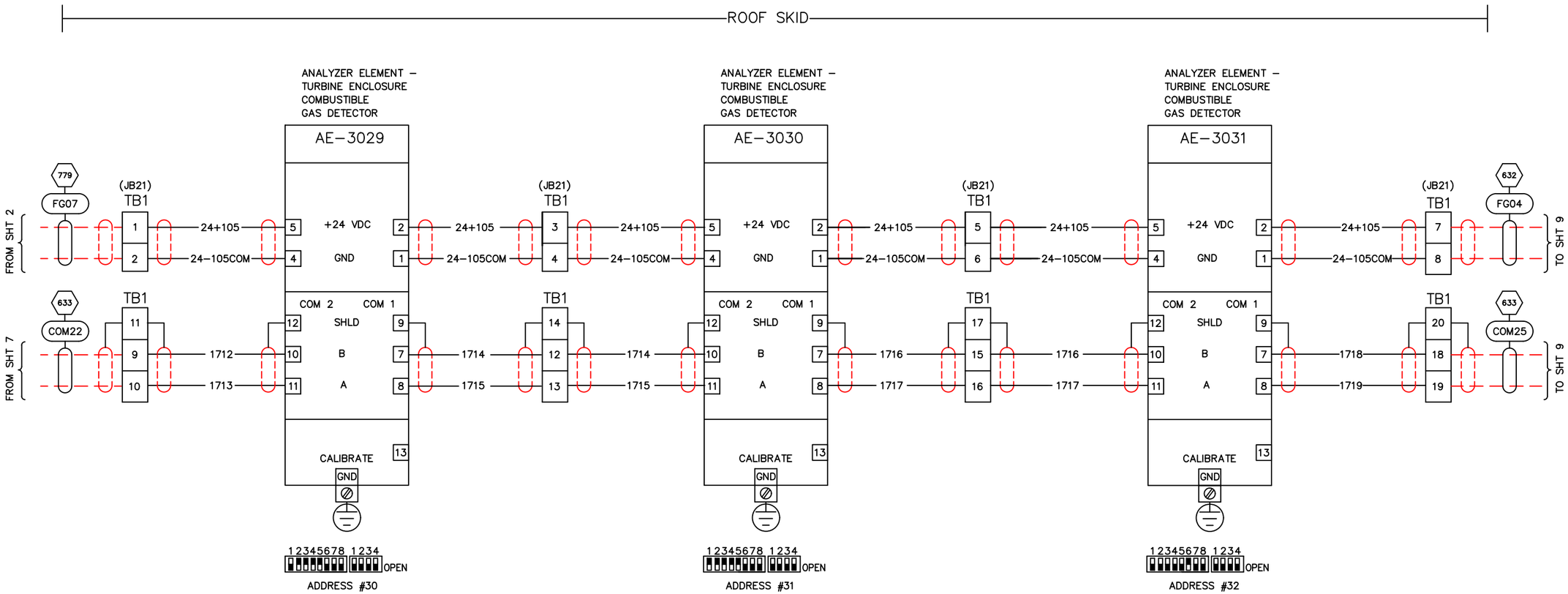

DRAWING SHEET APPLIES TO ALL UNITS

GE Mfg. No.	Hand	Unit No.
7264807	LH	2

REVISIONS

REV	DESCRIPTION	DATE	BY
0	ISSUED FOR APPROVAL	01/07/16	MAP
1	REVISED PER CUSTOMER COMMENTS	02/05/16	MAP
2	REVISED PER CUSTOMER COMMENTS	07/11/16	JG
3	REVISED PER CUSTOMER COMMENTS	09/28/16	JG
4	REVISED PER CUSTOMER COMMENTS	11/17/16	JG
5	REVISED PER CUSTOMER COMMENTS	01/24/17	JG

THIS DRAWING, DESIGN AND THE DATA CONTAINED THEREIN IS THE PROPERTY OF WILSON FIRE EQUIPMENT AND IS NOT TO BE DISTRIBUTED TO OR USED BY OTHERS WITHOUT THE EXPRESSED WRITTEN CONSENT OF WILSON FIRE EQUIPMENT.

SCALE:	AS SHOWN	DATE
DRAWN:	MAP	01/07/16
CHECKED:	LMW	01/24/17
APPROVED:	LMW	01/24/17

WILSON FIRE EQUIPMENT & SERVICE CO.
7303 EMPIRE CENTRAL DRIVE HOUSTON, TEXAS 77040 (713) 896–4747

CUSTOMER INFORMATION

GE PACKAGED POWER L.P. 7264807

LMS100 60HZ
EXELON PROJECT

SYSTEM WIRING – INSTRUMENT LOOP DIAGRAM
FIRE DETECTION / CO2 SUPPRESSION SYSTEM
WFE PROJECT # GE–1378

SIZE	DRAWING NO.	REV
B	SW–1378–08 SHEET 8 OF 15	5

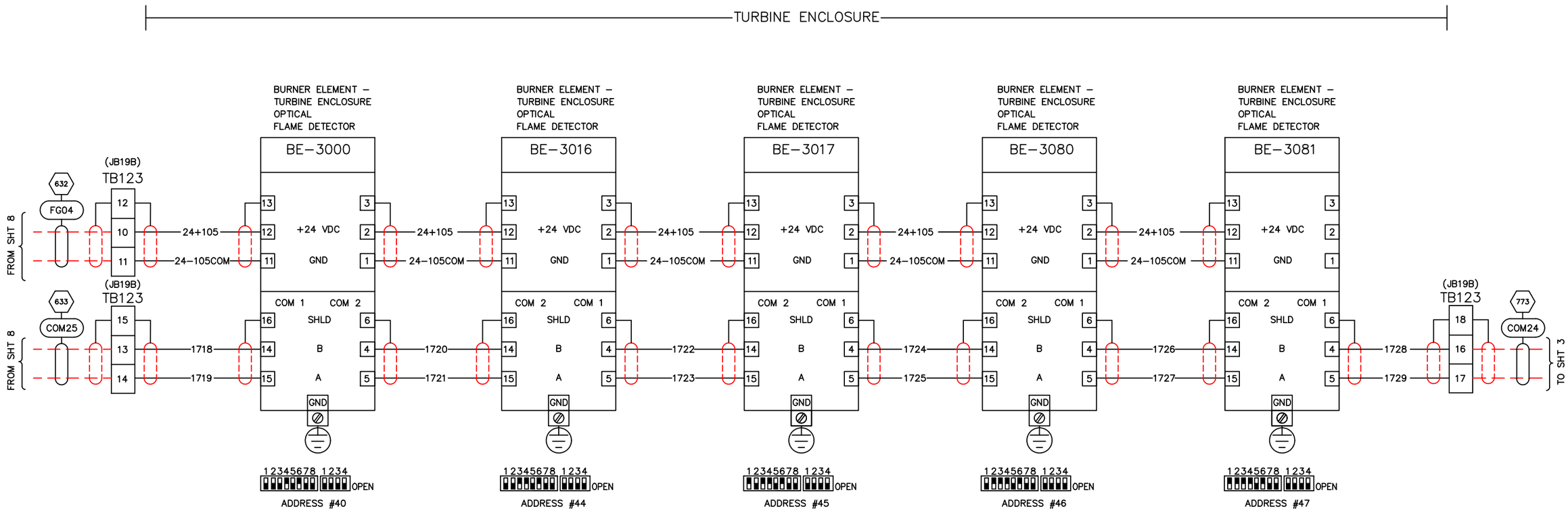

DRAWING SHEET APPLIES TO ALL UNITS

GE Mfg. No.	Hand	Unit No.
7264807	LH	2

REVISIONS

REV	DESCRIPTION	DATE	BY
0	ISSUED FOR APPROVAL	01/07/16	MAP
1	REVISED PER CUSTOMER COMMENTS	02/05/16	MAP
2	REVISED PER CUSTOMER COMMENTS	07/11/16	JG
3	REVISED PER CUSTOMER COMMENTS	09/28/16	JG
4	REVISED PER CUSTOMER COMMENTS	11/17/16	JG
5	REVISED PER CUSTOMER COMMENTS	01/24/17	JG

THIS DRAWING, DESIGN AND THE DATA CONTAINED THEREIN IS THE PROPERTY OF WILSON FIRE EQUIPMENT AND IS NOT TO BE DISTRIBUTED TO OR USED BY OTHERS WITHOUT THE EXPRESSED WRITTEN CONSENT OF WILSON FIRE EQUIPMENT.

SCALE:	AS SHOWN	DATE
DRAWN:	MAP	01/07/16
CHECKED:	LMW	01/24/17
APPROVED:	LMW	01/24/17

WILSON FIRE EQUIPMENT & SERVICE CO.
7303 EMPIRE CENTRAL DRIVE HOUSTON, TEXAS 77040 (713) 896–4747

CUSTOMER INFORMATION

GE PACKAGED POWER L.P. 7264807

LMS100 60HZ
EXELON PROJECT

SYSTEM WIRING – INSTRUMENT LOOP DIAGRAM
FIRE DETECTION / CO2 SUPPRESSION SYSTEM
WFE PROJECT # GE–1378

SIZE	DRAWING NO.	REV
B	SW–1378–09 SHEET 9 OF 15	5

NODE ADD	DEVICE TYPE	TAG NAME	DESCRIPTION	NODE CONFIGURATION SETTINGS									
1	CONTROLLER			CONFIG PORT BAUD RATE: 115200	PARITY: NONE	SERIAL PORT PROTOCOL: MODBUS SLAVE	MODBUS BAUD RATE: 115200		PARITY: NONE	BEEPER VOLUME: HIGH	ALLOW LON POINT DISABLING: YES	OPTION BOARD: CONTROL NET:	CONTROL NET MAC ADDRESS: 17
	CONTROLLER INPUTS			INTPUT 1: NONE	INTPUT 2: NONE	INTPUT 3: NONE	INTPUT 4: NONE		INTPUT 5: NONE	INTPUT 6: NONE	INTPUT 7: NONE	INTPUT 8: NONE	
	CONTROLLER OUTPUTS			OUTPUT 1:	OUTPUT 2:	OUTPUT 3:	OUTPUT4:		OUTPUT 5:	OUTPUT 6	OUTPUT 7:	OUTPUT 8: NONE	
	RELAY–1		FIRE/GAS MONITOR SHUTDOWN										
	RELAY–2												
	RELAY–3		ALARM LEL– TURBINE ROOM										
	RELAY–4		RELAY FAULT (CUSTOMER)										
	RELAY–5		SHUTDOWN LEL– TURBINE ROOM										
	RELAY–6		F&G SUPPRESSANT AGENT RELEASE (CUSTOMER)										
	RELAY–7		CRITICAL PATH SHUTDOWN										
	RELAY–8		GENERAL ALARM (CUSTOMER)										
NODE ADD	DEVICE TYPE	TAG NAME	DESCRIPTION	NODE CONFIGURATION SETTINGS									
10	DCIO1							1 2 3 4 5 6 7 8 1 2 3 4 OPEN					
	DCIO1 CH 1	JB19A–1–1	HS–3070 THRU 3077 MANUAL CO2 RELEASE STATION	CHANNEL TYPE: INPUT	SUPERVISION: OPENS	STATIC LOGIC MODE (INPUT): FIRE ALARM	30 SEC.						
	DCIO1 CH 2	JB19A–1–2	YSA–3046, FIRE/GAS SAFETY ALARM HORN (INSIDE) (TURBINE ENCLOSURE)	CHANNEL TYPE: OUTPUT	SUPERVISION: OPENS		ACTIVATION TIME (OUTPUT): 0						
	DCIO1 CH 3	JB19A–1–3	YSL–3043 FIRE/GAS SAFETY LIGHT BEACON (INSIDE) (TURBINE ENCLOSURE)	CHANNEL TYPE: OUTPUT	SUPERVISION: OPENS		ACTIVATION TIME (OUTPUT): 0						
	DCIO1 CH 4	JB19A–1–4											
	DCIO1 CH 5	JB19A–1–5	YSL–3042 FIRE/GAS SAFETY LIGHT BEACON (OUTSIDE) (TURBINE ENCLOSURE)	CHANNEL TYPE: OUTPUT	SUPERVISION: OPENS		ACTIVATION TIME (OUTPUT): 0						
	DCIO1 CH 6	JB19A–1–6	YSA–3006, FIRE/GAS SAFETY ALARM HORN (OUTSIDE) (TURBINE ENCLOSURE)	CHANNEL TYPE: INPUT	SUPERVISION: OPENS	STATIC LOGIC MODE (INPUT): FIRE ALARM	30 SEC.						
	DCIO1 CH 7	JB19A–1–7		CHANNEL TYPE: INPUT	SUPERVISION: NONE	STATIC LOGIC MODE (INPUT):	0						
	DCIO1 CH 8	JB19A–1–8		CHANNEL TYPE: INPUT	SUPERVISION: NONE	STATIC LOGIC MODE (INPUT):	0						
NODE ADD	DEVICE TYPE	TAG NAME	DESCRIPTION	NODE CONFIGURATION SETTINGS									
11	DCIO2							1 2 3 4 5 6 7 8 1 2 3 4 OPEN					
	DCIO2 CH 1	JB19A–2–1	TS–3003, 3014, 3053 THRU 3056, 3066, 3067, 3068 THERMAL SPOT DETECTOR (TURBINE)	CHANNEL TYPE: INPUT	SUPERVISION: OPENS	STATIC LOGIC MODE (INPUT): FIRE ALARM	30 SEC.						
	DCIO2 CH 2	JB19A–2–2	HS–3040 HORN ACKNOWLEDGE (TURBINE ENCLOSURE)	CHANNEL TYPE: INPUT	SUPERVISION: NONE	STATIC LOGIC MODE (INPUT): FIRE ALARM	0						
	DCIO2 CH 3	JB19A–2–3	YSA–3047, FIRE/GAS SAFETY ALARM HORN (OUTSIDE) (TURBINE ENCLOSURE)	CHANNEL TYPE: OUTPUT	SUPERVISION: OPENS		ACTIVATION TIME (OUTPUT): 0						
	DCIO2 CH 4	JB19A–2–4											
	DCIO2 CH 5	JB19A–2–5	YSL–3036 FIRE/GAS SAFETY ALARM BEACON (INSIDE) (TURBINE ENCLOSURE)	CHANNEL TYPE: OUTPUT	SUPERVISION: OPENS		ACTIVATION TIME (OUTPUT): 0						
	DCIO2 CH 6	JB19A–2–6	YSL–3041 FIRE/GAS SAFETY LIGHT BEACON (OUTSIDE) (TURBINE ENCLOSURE)	CHANNEL TYPE: OUTPUT	SUPERVISION: OPENS		ACTIVATION TIME (OUTPUT): 0						
	DCIO2 CH 7	JB19A–2–7		CHANNEL TYPE: OUTPUT	SUPERVISION: OPENS		ACTIVATION TIME (OUTPUT): 0						
	DCIO2 CH 8	JB19A–2–8		CHANNEL TYPE: INPUT	SUPERVISION: NONE		ACTIVATION TIME (OUTPUT): 0						

DRAWING SHEET APPLIES TO ALL UNITS

GE Mfg. No.	Hand	Unit No.
7264807	LH	2

REVISIONS

REV	DESCRIPTION	DATE	BY
0	ISSUED FOR APPROVAL	01/07/16	MAP
1	REVISED PER CUSTOMER COMMENTS	02/05/16	MAP
2	REVISED PER CUSTOMER COMMENTS	07/11/16	JG
3	REVISED PER CUSTOMER COMMENTS	09/28/16	JG
4	REVISED PER CUSTOMER COMMENTS	11/17/16	JG
5	REVISED PER CUSTOMER COMMENTS	01/24/17	JG

THIS DRAWING, DESIGN AND THE DATA CONTAINED THEREIN IS THE PROPERTY OF WILSON FIRE EQUIPMENT AND IS NOT TO BE DISTRIBUTED TO OR USED BY OTHERS WITHOUT THE EXPRESSED WRITTEN CONSENT OF WILSON FIRE EQUIPMENT.

SCALE:	AS SHOWN	DATE
DRAWN:	MAP	01/07/16
CHECKED:	LMW	01/24/17
APPROVED:	LMW	01/24/17

WILSON FIRE EQUIPMENT & SERVICE CO.
7303 EMPIRE CENTRAL DRIVE HOUSTON, TEXAS 77040 (713) 896–4747

CUSTOMER INFORMATION

GE PACKAGED POWER L.P. 7264807

LMS100 60HZ
EXELON PROJECT

SYSTEM WIRING – LON LIST
FIRE DETECTION / CO2 SUPPRESSION SYSTEM
WFE PROJECT # GE–1378

SIZE	DRAWING NO.	REV
B	SW–1378–10 SHEET 10 OF 15	5

NODE ADD	DEVICE TYPE	TAG NAME	DESCRIPTION	NODE CONFIGURATION SETTINGS									
12	DCIO								1 2 3 4 5 6 7 8 1 2 3 4 OPEN				
	DCIO CH 1	JB20–1	SOV–3059 SOLENOID OPERATED VALVE MAIN BANK BOTTLE 1A	CHANNEL TYPE: OUTPUT	SUPERVISION: OPEN	ACTIVATION TIME (OUTPUT): 30 SEC.							
	DCIO CH 2	JB20–2	SOV–3060 SOLENOID OPERATED VALVE MAIN BANK BOTTLE 2A	CHANNEL TYPE: OUTPUT	SUPERVISION: OPEN	ACTIVATION TIME (OUTPUT): 30 SEC.							
	DCIO CH 3	JB20–3	SOV–3061 SOLENOID OPERATED VALVE RESERVE BANK BOTTLE 1B	CHANNEL TYPE: OUTPUT	SUPERVISION: OPEN	ACTIVATION TIME (OUTPUT): 30 SEC.							
	DCIO CH 4	JB20–4	SOV–3062 SOLENOID OPERATED VALVE RESERVE BANK BOTTLE 2B	CHANNEL TYPE: OUTPUT	SUPERVISION: OPEN	ACTIVATION TIME (OUTPUT): 30 SEC.							
	DCIO CH 5	JB20–5	PSHH–3048 PRESSURE SWITCH HI HI CO2 DISCHARGE	CHANNEL TYPE: INPUT	SUPERVISION: OPEN	STATIC LOGIC FIRE MODE (INPUT): ALARM	ACTIVATION TIME 5 SEC. W/O PRESSURE SWITCH (OUTPUT): 90 SEC. W/ PRESSURE SWITCH						
	DCIO CH 6	JB20–6	HS–3063 HANDSWITCH PURGE ACKNOWLEDGE CO2	CHANNEL TYPE: INPUT	SUPERVISION: OPEN	STATIC LOGIC FIRE MODE (INPUT): ALARM	0						
	DCIO CH 7	JB20–7	ZSC–3064 POSITION SWITCH BLOCK VALVE CO2	CHANNEL TYPE: INPUT	SUPERVISION: OPEN	STATIC LOGIC INHIBIT MODE (INPUT): CO2 SYSTEM	0						
	DCIO CH 8	JB20–8	PSH–3057 PRESSURE SWITCH HIGH CO2 ALARM ONLY	CHANNEL TYPE: INPUT	SUPERVISION: OPEN	STATIC LOGIC FIRE MODE (INPUT): ALARM							

NODE ADD	DEVICE TYPE	TAG NAME	DESCRIPTION	NODE CONFIGURATION SETTINGS										
20	DCU	AE–3004	AE–3004 ANALYZER ELEMENT COMBUSTIBLE GAS DETECTOR	DCU TYPE: EXPLOSIVE	HIGH ALARM: 25	LOW ALARM: 15	CAL LEVEL: 50	GAS MODE: GAS DETECTOR		1 2 3 4 5 6 7 8 1 2 3 4 OPEN				DEADBAND 5
21	DCU	AE–3007	AE–3007 ANALYZER ELEMENT COMBUSTIBLE GAS DETECTOR	DCU TYPE: EXPLOSIVE	HIGH ALARM: 25	LOW ALARM: 15	CAL LEVEL: 50	GAS MODE: GAS DETECTOR		1 2 3 4 5 6 7 8 1 2 3 4 OPEN				DEADBAND 5
22	DCU	AE–3015	AE–3015 ANALYZER ELEMENT COMBUSTIBLE GAS DETECTOR	DCU TYPE: EXPLOSIVE	HIGH ALARM: 25	LOW ALARM: 15	CAL LEVEL: 50	GAS MODE: GAS DETECTOR		1 2 3 4 5 6 7 8 1 2 3 4 OPEN				DEADBAND 5
30	ECLIPSE	AE–3029	AE–3029 ANALYZER ELEMENT IR GAS DETECTOR	GAS TYPE: METHANE	CAL GAS TYPE: SAME	CAL METHOD: STD	UNITS: %LEL	HIGH ALARM: 10	LOW ALARM: 5	1 2 3 4 5 6 7 8 1 2 3 4 OPEN	CAL LEVEL: 50	LOW ALARM: NON–LATCHING:	HIGH ALARM: LATCHING	DEADBAND 5
31	ECLIPSE	AE–3030	AE–3030 ANALYZER ELEMENT IR GAS DETECTOR	GAS TYPE: METHANE	CAL GAS TYPE: SAME	CAL METHOD: STD	UNITS: %LEL	HIGH ALARM: 10	LOW ALARM: 5	1 2 3 4 5 6 7 8 1 2 3 4 OPEN	CAL LEVEL: 50	LOW ALARM: NON–LATCHING:	HIGH ALARM: LATCHING	DEADBAND 5
32	ECLIPSE	AE–3031	AE–3031 ANALYZER ELEMENT IR GAS DETECTOR	GAS TYPE: METHANE	CAL GAS TYPE: SAME	CAL METHOD: STD	UNITS: %LEL	HIGH ALARM: 10	LOW ALARM: 5	1 2 3 4 5 6 7 8 1 2 3 4 OPEN	CAL LEVEL: 50	LOW ALARM: NON–LATCHING:	HIGH ALARM: LATCHING	DEADBAND 5
40	X9800 IR	BE–3000	BE–3000 BURNER ELEMENT SFIR OPTICAL FLAME DETECTOR TURBINE ROOM	NON–LATCHING:	TIME DELAY: 0		Oi MODE: AUTO	HEATER: ENABLED	IR SENS: MEDIUM	1 2 3 4 5 6 7 8 1 2 3 4 OPEN	PROCESSING MODE (IR): TDSA	IR Oi TEST FREQ: 1	FAILED IR Oi TEST FOR FAULT: 1	DEADBAND 5
44	X9800 IR	BE–3016	BE–3016 BURNER ELEMENT SFIR OPTICAL FLAME DETECTOR TURBINE ROOM	NON–LATCHING:	TIME DELAY: 0		Oi MODE: AUTO	HEATER: ENABLED	IR SENS: MEDIUM	1 2 3 4 5 6 7 8 1 2 3 4 OPEN	PROCESSING MODE (IR): TDSA	IR Oi TEST FREQ: 1	FAILED IR Oi TEST FOR FAULT: 1	DEADBAND 5
45	X9800 IR	BE–3017	BE–3017 BURNER ELEMENT SFIR OPTICAL FLAME DETECTOR TURBINE ROOM	NON–LATCHING:	TIME DELAY: 0		Oi MODE: AUTO	HEATER: ENABLED	IR SENS: MEDIUM	1 2 3 4 5 6 7 8 1 2 3 4 OPEN	PROCESSING MODE (IR): TDSA	IR Oi TEST FREQ: 1	FAILED IR Oi TEST FOR FAULT: 1	DEADBAND 5
46	X9800 IR	BE–3080	BE–3080 BURNER ELEMENT SFIR OPTICAL FLAME DETECTOR TURBINE ROOM	NON–LATCHING:	TIME DELAY: 0		Oi MODE: AUTO	HEATER: ENABLED	IR SENS: MEDIUM	1 2 3 4 5 6 7 8 1 2 3 4 OPEN	PROCESSING MODE (IR): TDSA	IR Oi TEST FREQ: 1	FAILED IR Oi TEST FOR FAULT: 1	DEADBAND 5
47	X9800 IR	BE–3081	BE–3081 BURNER ELEMENT SFIR OPTICAL FLAME DETECTOR TURBINE ROOM	NON–LATCHING:	TIME DELAY: 0		Oi MODE: AUTO	HEATER: ENABLED	IR SENS: MEDIUM	1 2 3 4 5 6 7 8 1 2 3 4 OPEN	PROCESSING MODE (IR): TDSA	IR Oi TEST FREQ: 1	FAILED IR Oi TEST FOR FAULT: 1	DEADBAND 5

DRAWING SHEET APPLIES TO ALL UNITS

GE Mfg. No.	Hand	Unit No.
7264807	LH	2

REVISIONS

REV	DESCRIPTION	DATE	BY
0	ISSUED FOR APPROVAL	01/07/16	MAP
1	REVISED PER CUSTOMER COMMENTS	02/05/16	MAP
2	REVISED PER CUSTOMER COMMENTS	07/11/16	JG
3	REVISED PER CUSTOMER COMMENTS	09/28/16	JG
4	REVISED PER CUSTOMER COMMENTS	11/17/16	JG
5	REVISED PER CUSTOMER COMMENTS	01/24/17	JG

THIS DRAWING, DESIGN AND THE DATA CONTAINED THEREIN IS THE PROPERTY OF WILSON FIRE EQUIPMENT AND IS NOT TO BE DISTRIBUTED TO OR USED BY OTHERS WITHOUT THE EXPRESSED WRITTEN CONSENT OF WILSON FIRE EQUIPMENT.

SCALE: AS SHOWN		DATE
DRAWN:	MAP	01/07/16
CHECKED:	LMW	01/24/17
APPROVED:	LMW	01/24/17

WILSON FIRE EQUIPMENT & SERVICE CO.
7303 EMPIRE CENTRAL DRIVE HOUSTON, TEXAS 77040 (713) 896–4747

CUSTOMER INFORMATION

GE PACKAGED POWER L.P. 7264807

LMS100 60HZ
EXELON PROJECT

SYSTEM WIRING – LON LIST
FIRE DETECTION / CO2 SUPPRESSION SYSTEM
WFE PROJECT # GE–1378

SIZE	DRAWING NO.	REV
B	SW–1378–11 SHEET 11 OF 15	5