The board with the AD8318 has a voltage regulator on it

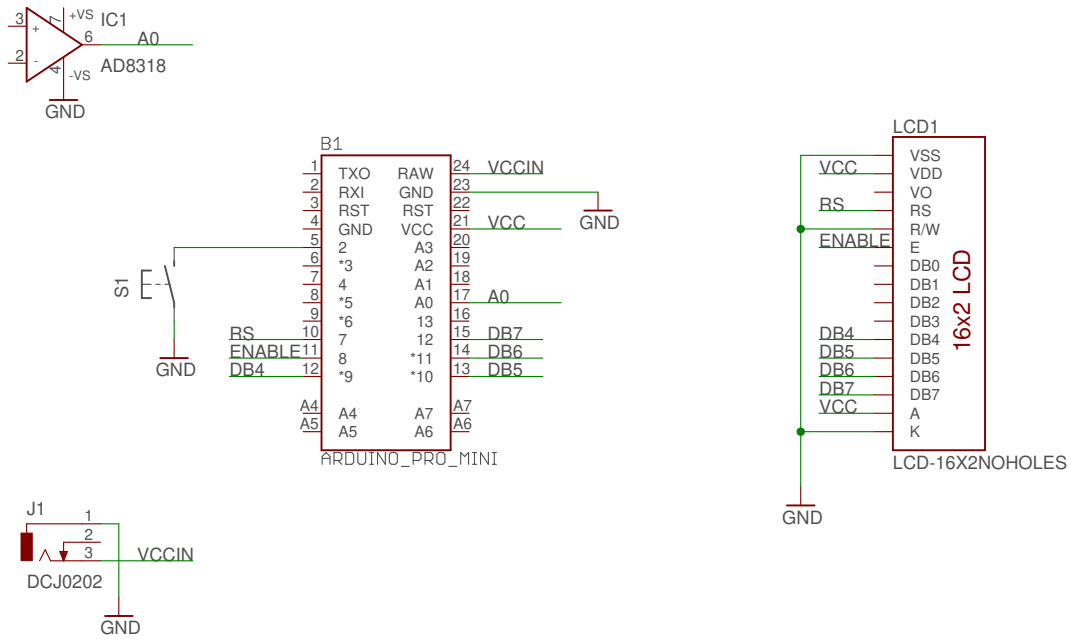

Glen Overby, kc0iyt

TITLE: PowerMeter	
Document Number:	REV:
Date: 2/2/22 9:21 PM	Sheet: 1/1