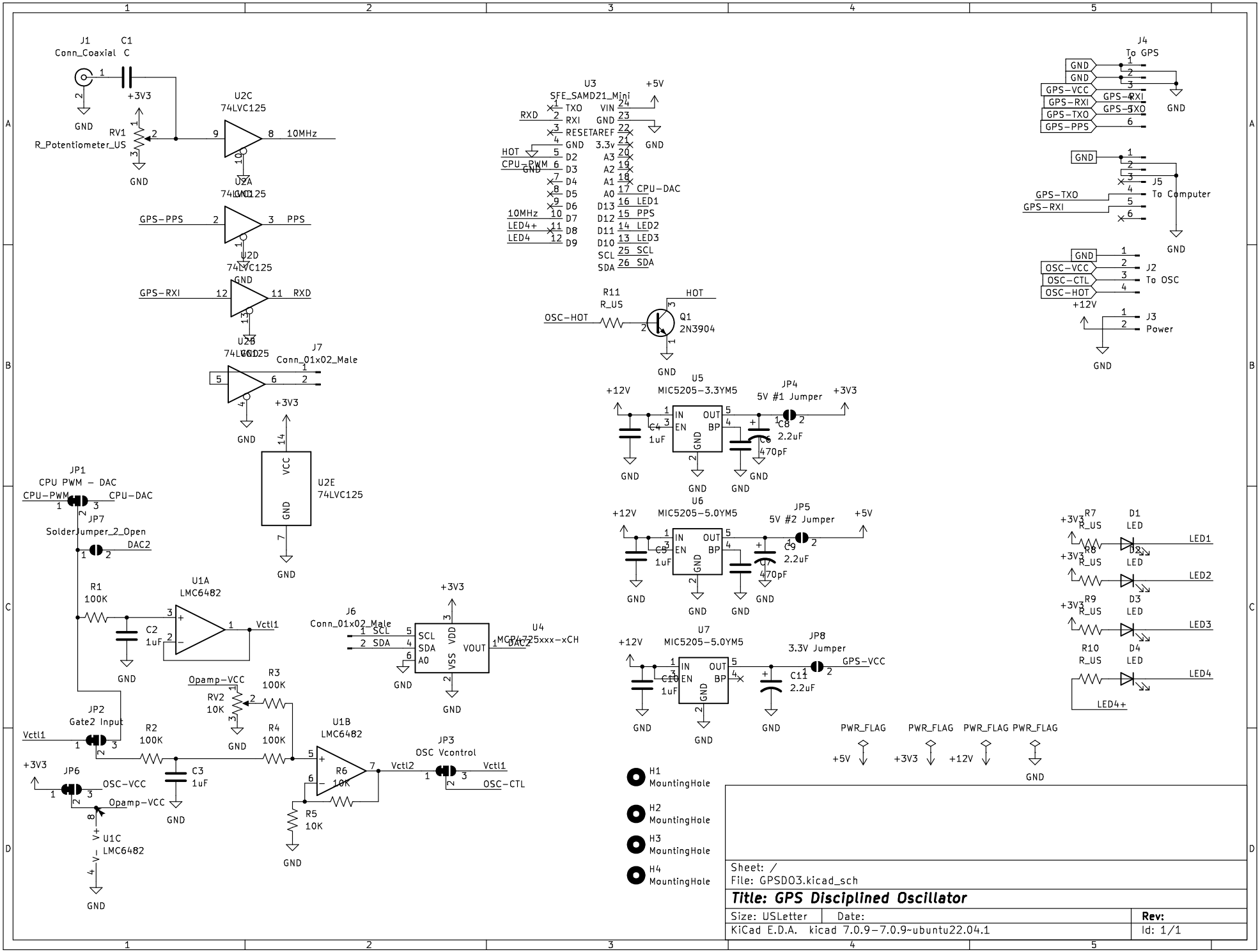
J1
Conn_Coaxial
C1
C
+3V3
GND
RV1
R_Potentiometer_US
U2C
74LVC125
10MHz
U2A
74LVC125
GPS-PPS
PPS
U2D
74LVC125
GPS-RXI
RXD
U2B
74LVC125
J7
Conn_01x02_Male
U2E
74LVC125
VCC
GND
JP1
CPU PWM - DAC
CPU-PWM
CPU-DAC
JP7
SolderJumper_2_Open
DAC2
R1
100K
U1A
LMC6482
C2
1uF
Vctl1
JP2
Gate2 Input
R2
100K
C3
1uF
JP6
OSC-VCC
Opamp-VCC
U1C
LMC6482
R3
100K
RV2
10K
R4
100K
U1B
LMC6482
R6
10K
R5
10K
Vctl2
JP3
OSC Vcontrol
OSC-CTL
J6
Conn_01x02_Male
SCL
SDA
U4
MCP4725xxx-xCH
VDD
VSS
VOUT
U3
SFE_SAMD21_Mini
+5V
TXO
RXI
RESETAREF
3.3v
D2
D3
D4
D5
D6
D7
D8
D9
VIN
A3
A2
A1
A0
D13
D12
D11
D10
CPU-DAC
LED1
PPS
LED2
LED3
SCL
SDA
HOT
CPU-PWM
10MHz
LED4+
LED4
R11
R_US
OSC-HOT
Q1
2N3904
U5
MIC5205-3.3YM5
+12V
IN
EN
OUT
BP
C4
1uF
C6
470pF
JP4
5V #1 Jumper
C8
2.2uF
U6
MIC5205-5.0YM5
C5
1uF
C7
470pF
JP5
5V #2 Jumper
C9
2.2uF
U7
MIC5205-5.0YM5
C10
1uF
C11
2.2uF
JP8
3.3V Jumper
GPS-VCC
R7
R8
R9
R10
D1
D2
D3
D4
LED
LED1
LED2
LED3
LED4
LED4+
PWR_FLAG
H1
MountingHole
H2
MountingHole
H3
MountingHole
H4
MountingHole
J4
To GPS
GPS-RXI
GPS-TXO
GPS-PPS
J5
To Computer
J2
To OSC
OSC-VCC
OSC-CTL
OSC-HOT
J3
Power
Sheet: /
File: GPSDO3.kicad_sch
Title: GPS Disciplined Oscillator
Size: USLetter
Date:
Rev:
KiCad E.D.A. kicad 7.0.9-7.0.9~ubuntu22.04.1
Id: 1/1