CONNECTOR

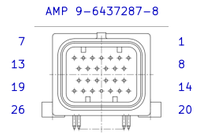

MATING CONN: 3-1437290-7
TERMINALS: 3-1447221-3 (18-22 AWG)
CAVITY PLUG: 4-1437284-3

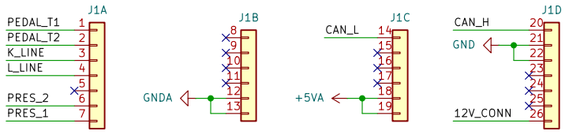

PIN	FUNCTION	PIN	FUNCTION	PIN	FUNCTION	PIN	FUNCTION
1	ABS MODULE PEDAL TRAVEL 1	8	NC	14	CAN LOW	20	CAN HIGH
2	ABS MODULE PEDAL TRAVEL 2	9	NC	15	NC	21	CAN GND
3	ABS MODULE K-LINE	10	NC	16	NC	22	CHASSIS GND
4	ABS MODULE L-LINE	11	NC	17	NC	23	NC
5	NC	12	SENSOR GND	18	SENSOR 5V	24	NC
6	BRAKE PRESSURE SENSOR 2	13	SENSOR GND	19	SENSOR 5V	25	NC
7	BRAKE PRESSURE SENSOR 1					26	12 IGNITION

POWER

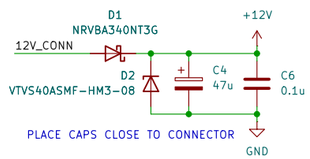

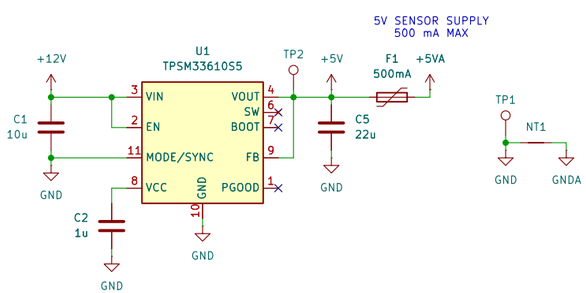

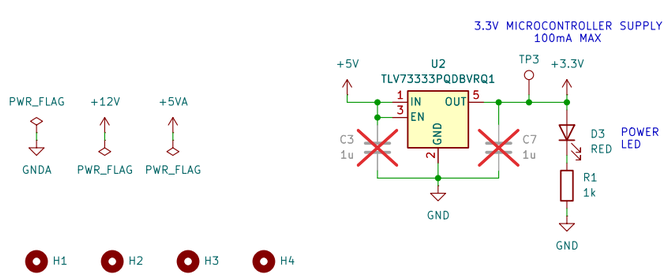

CAN BUS

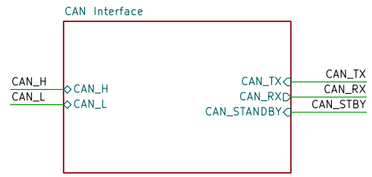

BRAKE PRESSURE INPUTS

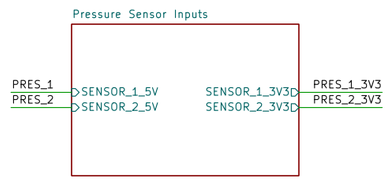

PEDAL TRAVEL OUTPUT

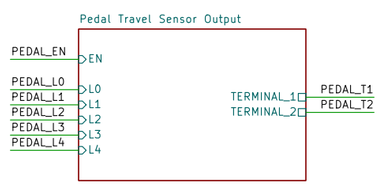

ABS DIAGNOSTIC INTERFACE

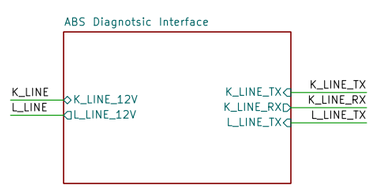

MICROCONTROLLER

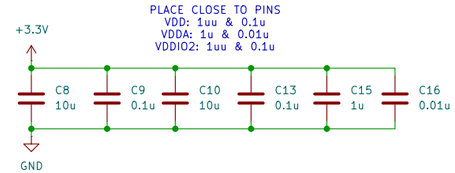

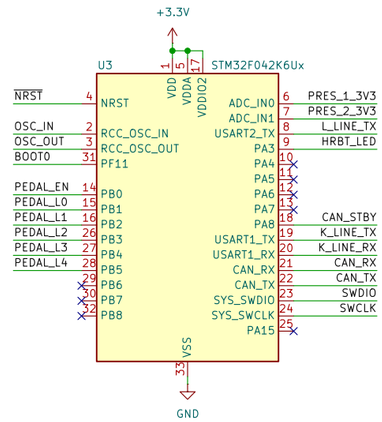

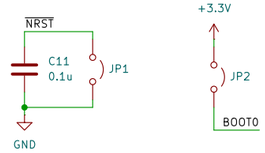

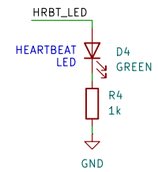

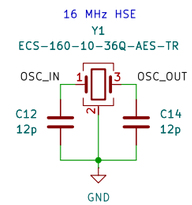

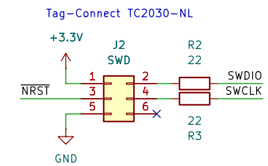

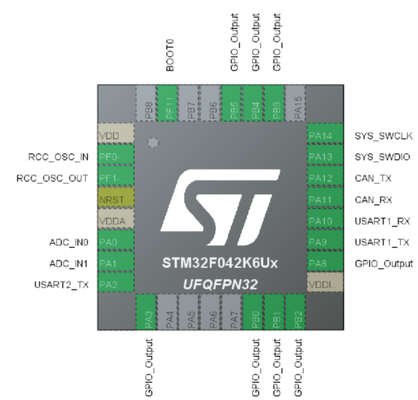

Ian Glen <ian@ianglen.me>
Glen Racing

Sheet: /
File: bmw-e36-abs-adapter.kicad_sch

Title: BMW E36 ABS Adapter

Size: B	Date: 2026-04-05	Rev:
KiCad E.D.A. 10.0.0		Id: 1/5

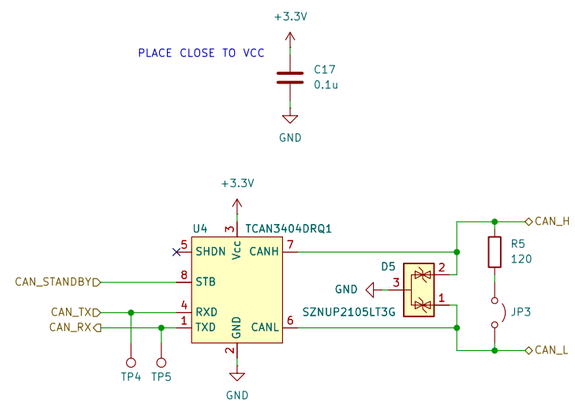

Ian Glen <ian@ianglen.me>
Glen Racing

Sheet: /CAN Interface/
File: canbus.kicad_sch

Title: CAN Interface

Size: B	Date: 2026-04-05	**Rev:**
KiCad E.D.A. 10.0.0		Id: 2/5

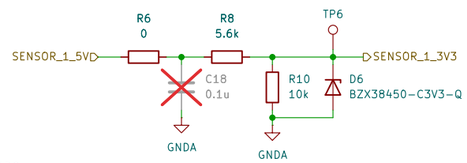

5V INPUT = 3.205 V @ ADC

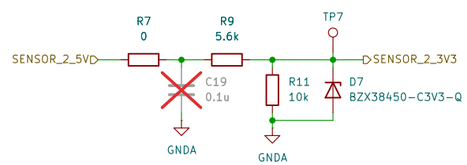

Ian Glen <ian@ianglen.me>

Glen Racing

Sheet: /Pressure Sensor Inputs/
File: pressure-sensor-inputs.kicad_sch

Title: Brake Pressure Sensor Inputs

Size: B	Date: 2026-04-05	Rev:
KiCad E.D.A. 10.0.0		Id: 3/5

20mA MAX TERMINAL CURRENT

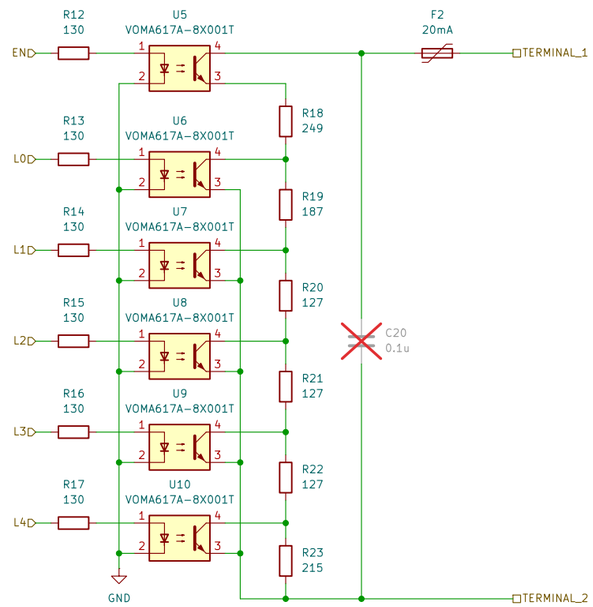

Vf = 1.33V
If = 15mA
CTR = -130%
Ic = -20mA

RESISTOR LEVELS:

L0 = 1: 249
L1 = 1: 436
L2 = 1: 563
L3 = 1: 690
L4 = 1: 817
ALL 0: 1032

OPEN-CIRCUIT IN INIT
AND FAILURE STATES

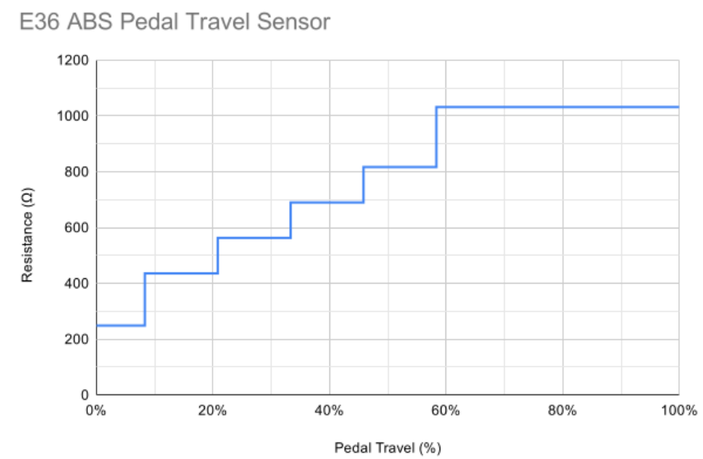

Ian Glen <ian@ianglen.me>
Glen Racing

Sheet: /Pedal Travel Sensor Output/
File: pedal-travel-sensor-output.kicad_sch

Title: Pedal Travel Sensor Output

Size: B	Date: 2026-04-05	Rev:
KiCad E.D.A. 10.0.0		Id: 4/5

ISO 9141-LIKE DIAGNOSTIC INTERFACE

12V SIGNALLING, IDLE HIGH
L-LINE: UNIDIRECTIONAL, ADDRESSING ONLY
K-LINE: BIDIRECTIONAL, ADDRESSING & DATA TRANSFER

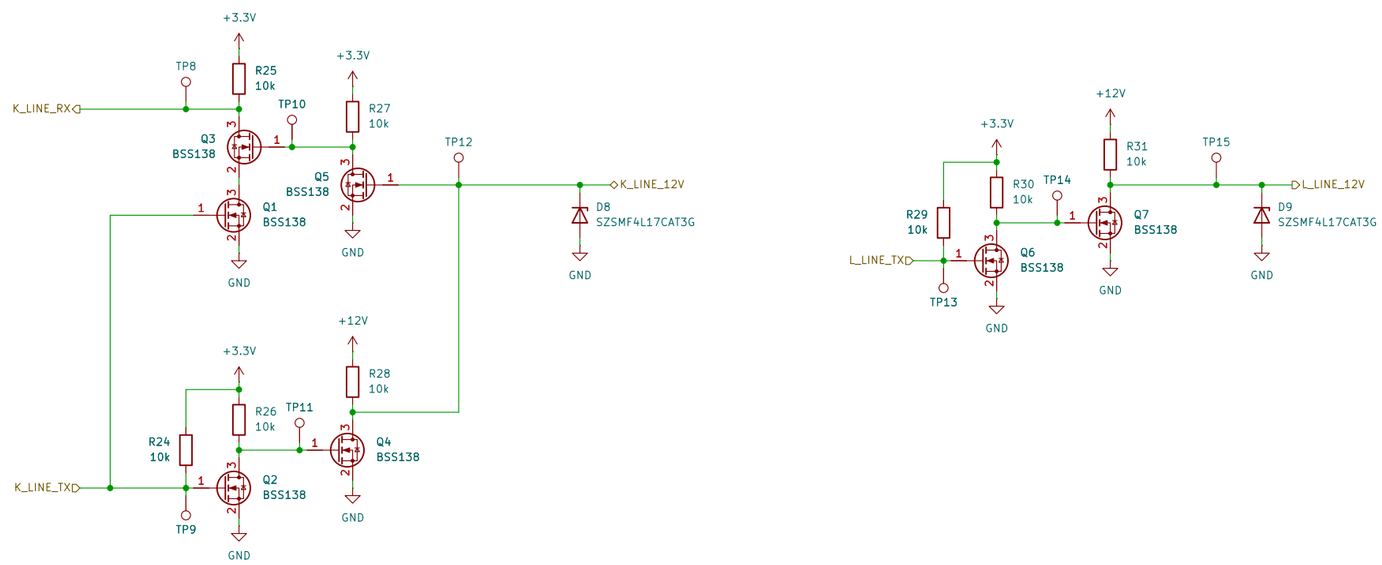

Ian Glen <ian@ianglen.me>
Glen Racing

Sheet: /ABS Diagnotsic Interface/
File: abs-interface.kicad_sch

Title: ABS Diagnostic Interface

Size: B	Date: 2026-04-05	**Rev:**
KiCad E.D.A. 10.0.0		Id: 5/5