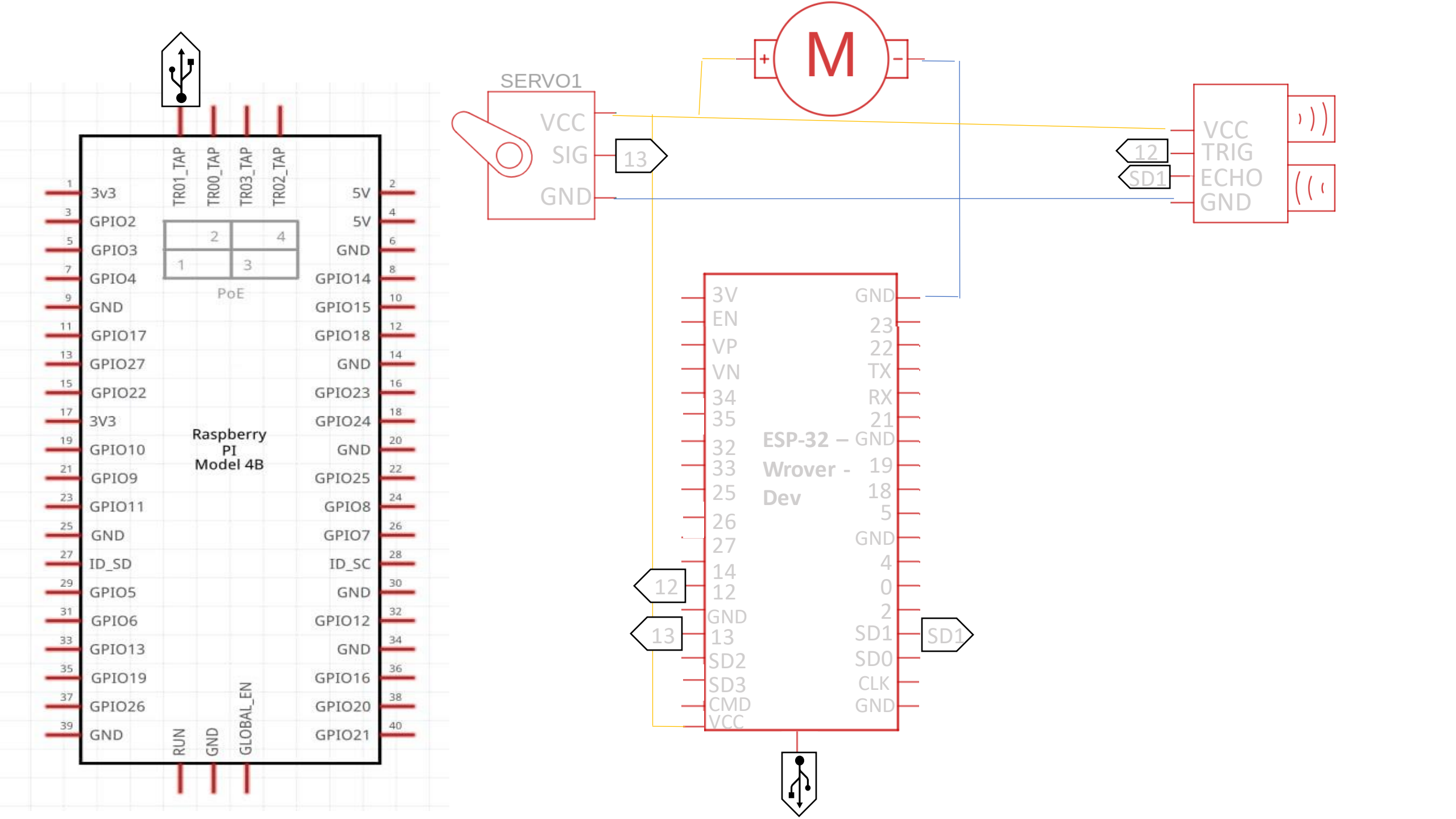
Raspberry PI Model 4B
TR01_TAP
TR00_TAP
TR03_TAP
TR02_TAP
PoE
RUN
GND
GLOBAL_EN
3v3
GPIO2
GPIO3
GPIO4
GND
GPIO17
GPIO27
GPIO22
3V3
GPIO10
GPIO9
GPIO11
GND
ID_SD
GPIO5
GPIO6
GPIO13
GPIO19
GPIO26
GND
5V
5V
GND
GPIO14
GPIO15
GPIO18
GND
GPIO23
GPIO24
GND
GPIO25
GPIO8
GPIO7
ID_SC
GND
GPIO12
GND
GPIO16
GPIO20
GPIO21
SERVO1
VCC
SIG
GND
13
M
+
-
12
SD1
VCC
TRIG
ECHO
GND
ESP-32 – Wrover - Dev
3V
EN
VP
VN
34
35
32
33
25
26
27
14
12
GND
13
SD2
SD3
CMD
VCC
GND
23
22
TX
RX
21
GND
19
18
5
GND
4
0
2
SD1
SD0
CLK
GND
12
13
SD1