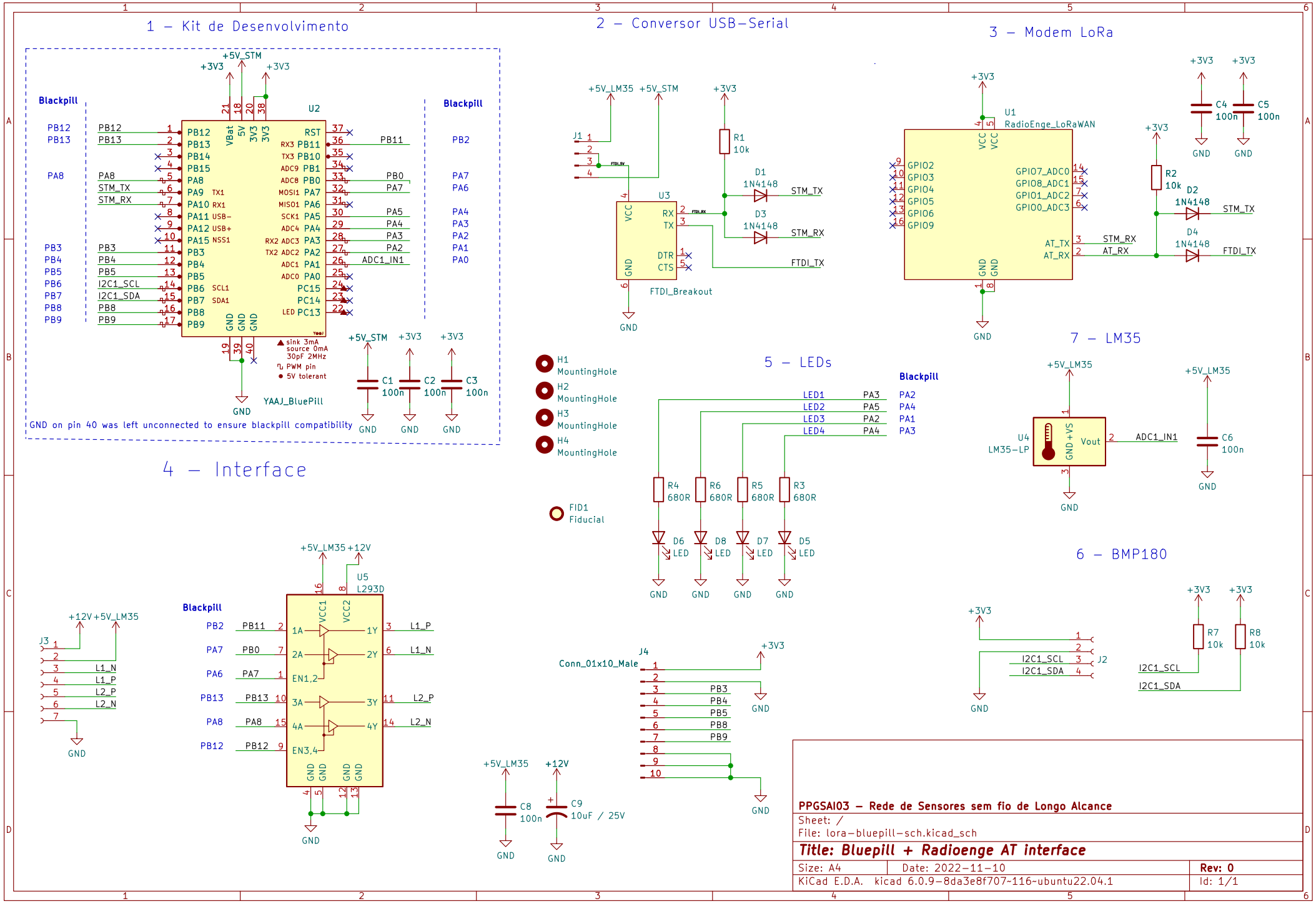
1 – Kit de Desenvolvimento
2 – Conversor USB–Serial
3 – Modem LoRa
4 – Interface
5 – LEDs
6 – BMP180
7 – LM35
Blackpill
U2
YAAJ_BluePill
GND on pin 40 was left unconnected to ensure blackpill compatibility
U3
FTDI_Breakout
U1
RadioEnge_LoRaWAN
U4
LM35–LP
U5
L293D
Conn_01x10_Male
H1 MountingHole
H2 MountingHole
H3 MountingHole
H4 MountingHole
FID1 Fiducial
PPGSAI03 – Rede de Sensores sem fio de Longo Alcance
Sheet: /
File: lora–bluepill–sch.kicad_sch
Title: Bluepill + Radioenge AT interface
Size: A4
Date: 2022–11–10
Rev: 0
KiCad E.D.A. kicad 6.0.9–8da3e8f707~116~ubuntu22.04.1
Id: 1/1