DATE	DESCRIPTION	REV.

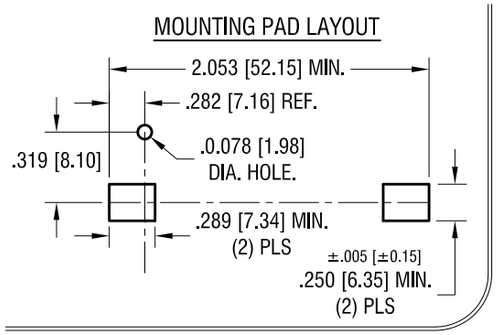

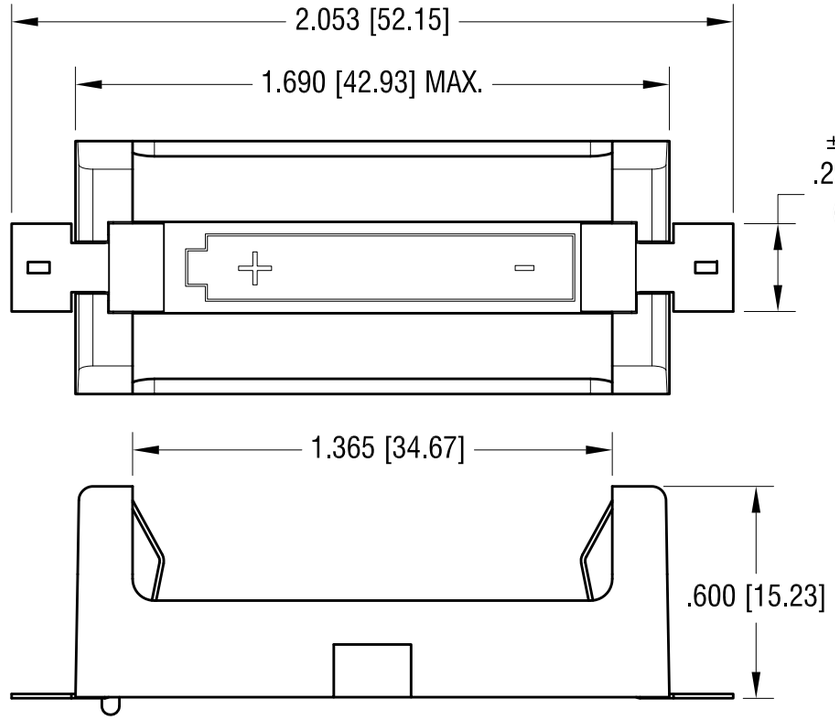

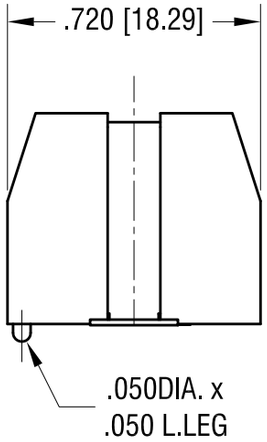

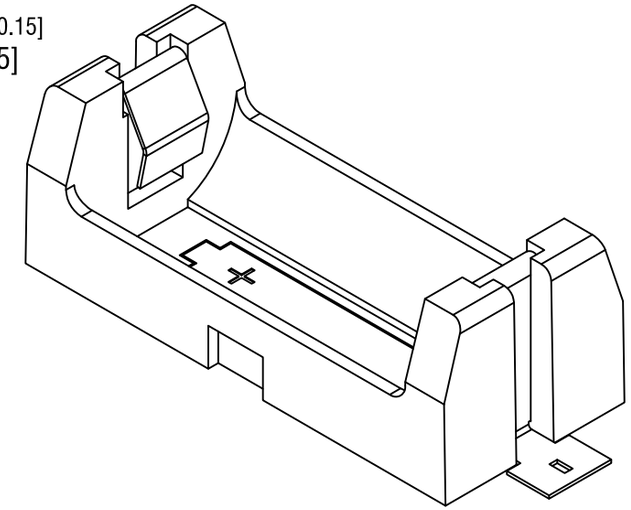

NOTE:

1. BASE:
   MAT'L: HEAT RESISTANCE NYLON
   STANYL 46 OR EQUIVALENT
2. CONTACT:
   MAT'L: .012 [0.30] THK PHOSPHOR BRONZE
   FINISH: GOLD FLASH, OVER NICKEL PLATE.

THIS DOCUMENT IS THE PROPERTY OF KEYSTONE ELECTRONICS CORP. AND SHALL NOT BE REPRODUCED, DISTRIBUTED OR USED AS A BASIS FOR MANUFACTURE WITHOUT PRIOR WRITTEN PERMISSION FROM KEYSTONE ELECTRONICS CORP.

KEYSTONE ELECTRONICS CORP.
www.keyelco.com • ASTORIA, N.Y. 11105-2017 • Tel (718) 956-8900

PART NAME: SM BATTERY HOLDER, 2/3 A			
MATERIAL: AS NOTED			
FINISH: AS NOTED	DRN BY: NT	DATE: 10.09.09	
	APP'D:	SCALE: 2X	
TOLERANCES INCH [MM] DECIMAL ± .010 [±] ANGULAR ± 1° UNLESS OTHERWISE SPECIFIED	CODE: C	DWG NO. 1018	