This is start of BMS it made of 4 components first is transformator from 220V/100V and graetz.
Next is DC/DC converter with variable currnet and voltage.(this first is more a charger)
Next on every cell i bq7*** microchip with abilty to measere and balance every battery cell
 (one is doing that for 15 batterys)(balance is done with discharging).
 And bq7*** is controled with some mcu

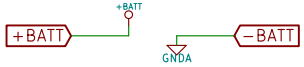

Battery pack

BQ7*** high

BQ7.sch

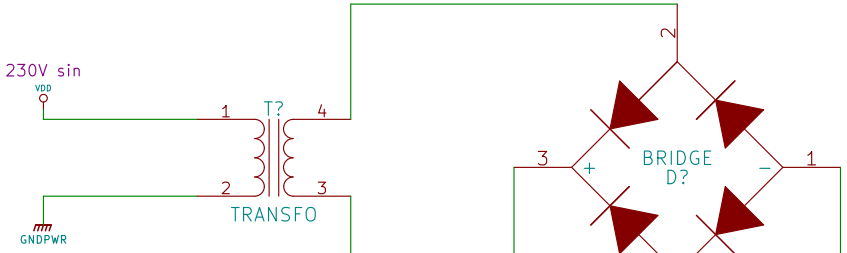

MCU

MCU.sch

BQ7**** low

BQ7_low.sch

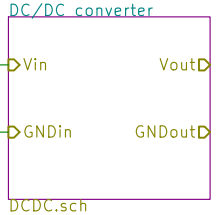

DCDC.sch

Battery cell

Batt.sch

FESB		
Sheet: / File: BMS.sch		
Title:		
Size: A4	Date:	**Rev:**
KiCad E.D.A. kicad (after 2015−may−25 BZR unknown)−product		Id: 1/101

Pick any MCU you whant and make schematic or him and strat codeing

FESB

Sheet: /MCU/
File: MCU.sch

Title:

Size: A4	Date:	**Rev:**
KiCad E.D.A. kicad (after 2015-may-25 BZR unknown)-product		Id: 2/101

Because a voltage to REGSRC is to high we are going to use FET for limiting

Bq7*** circuit its basicly disconnetced from other stuff looking a voltage of every cell and if needed discharging them.(balancing) Controled by a MCU two of them because we have 30 batterys.

VSS is same as ground symbol in this sheet

Be caerfull with VSS and other pins beacuse we must maintaine a specific max voltage diff between pins.

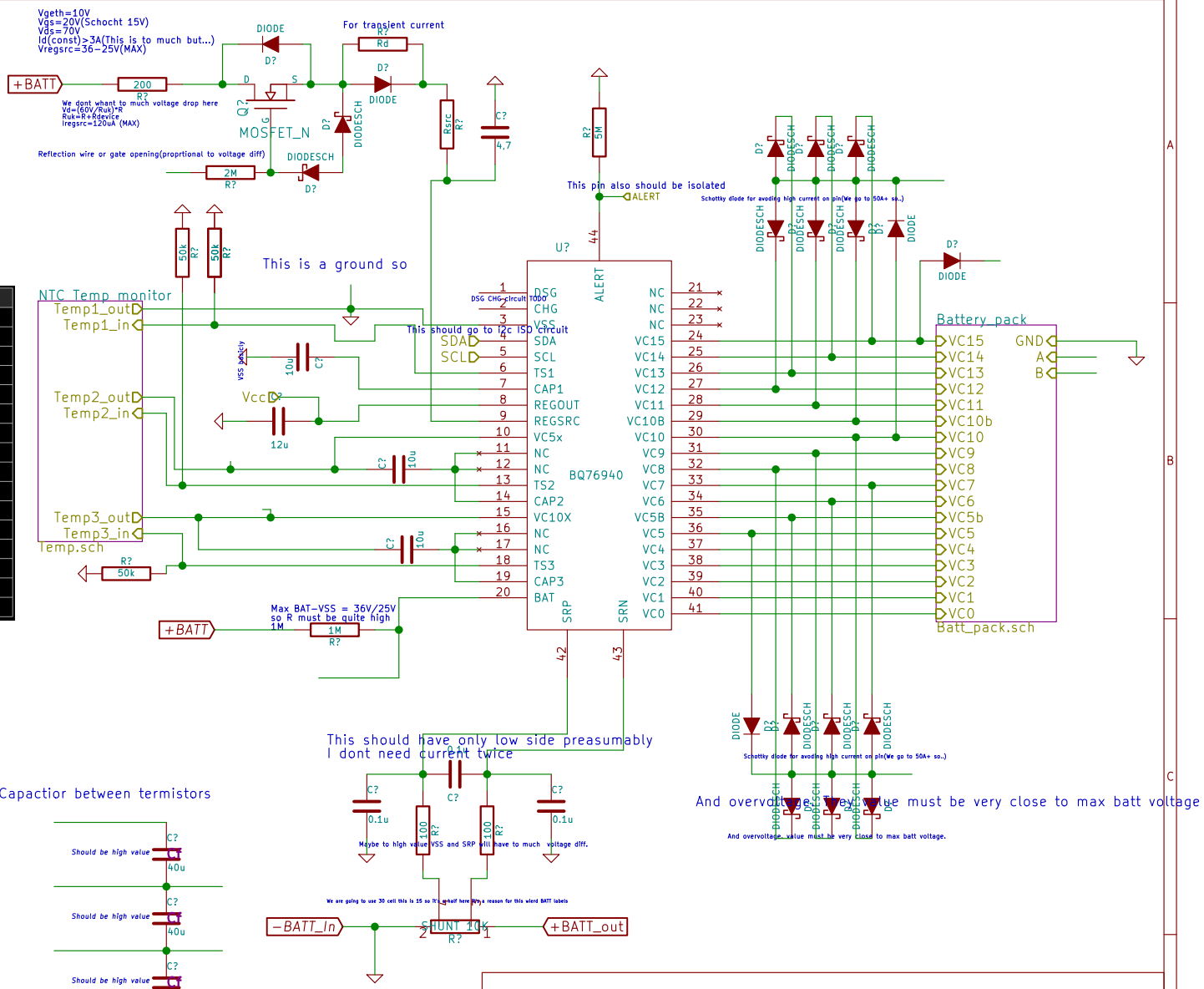

Pin configuration

PIN	NAME	TYPE	DESCRIPTION
1	DSG	O	Discharge FET driver
2	CHG	O	Charge FET driver
3	VSS	—	Chip VSS
4	SDA	I/O	I^2C communication to the host controller
5	SCL	I	I^2C communication to the host controller
6	TS1	I	Thermistor #1 positive terminal(1)
7	CAP1	O	Capacitor to VSS
8	REGOUT	P	Output LDO
9	REGSRC	I	Input source for output LDO
10	VC5X	P	Thermistor #2 negative terminal
11	NC	—	No connect (short to CAP2)
12	NC	—	No connect (short to CAP2)
13	TS2	I	Thermistor #2 positive terminal(1)
14	CAP2	O	Capacitor to VC5X
15	VC10X	P	Thermistor #3 negative terminal
16	NC	—	No connect (short to CAP3)

PIN	NAME	TYPE	DESCRIPTION
17	NC	—	No connect (short to CAP3)
18	TS3	I	Thermistor #3 positive terminal(1)
19	CAP3	O	Capacitor to VC10X
20	BAT	P	Battery (top-most) terminal
21	NC	—	No connect
22	NC	—	No connect
23	NC	—	No connect
24	VC15	I	Sense voltage for 15th cell positive terminal
25	VC14	I	Sense voltage for 14th cell positive terminal
26	VC13	I	Sense voltage for 13th cell positive terminal
27	VC12	I	Sense voltage for 12th cell positive terminal
28	VC11	I	Sense voltage for 11th cell positive terminal
29	VC10B	I	Sense voltage for 10th cell negative terminal
30	VC10	I	Sense voltage for 10th cell positive terminal
31	VC9	I	Sense voltage for 9th cell positive terminal
32	VC8	I	Sense voltage for 8th cell positive terminal
33	VC7	I	Sense voltage for 7th cell positive terminal
34	VC6	I	Sense voltage for 6th cell positive terminal
35	VC5B	I	Sense voltage for 6th cell negative terminal
36	VC5	I	Sense voltage for 5th cell positive terminal
37	VC4	I	Sense voltage for 4th cell positive terminal
38	VC3	I	Sense voltage for 3rd cell positive terminal
39	VC2	I	Sense voltage for 2nd cell positive terminal
40	VC1	I	Sense voltage for 1st cell positive terminal
41	VC0	I	Sense voltage for 1st cell negative terminal
42	SRP	I	Negative current sense (nearest VSS)
43	SRN	I	Positive current sense
44	ALERT	I/O	Alert output and override input

Capactior between termistors

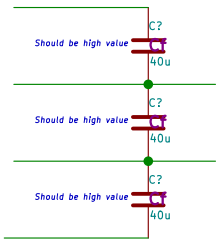

Dont forget this when programming

FESB

Sheet: /BQ7***_high/

File: BQ7.sch

Title: BQ76940

Size: A4 | Date: | **Rev:**

KiCad E.D.A. kicad (after 2015-may-25 BZR unknown)-product | Id: 3/101

Missing only for NTC so we can convert to Temp

$$V_{TSX} = (\text{ADC in Decimal}) \times 382\ \mu V/LSB$$

$$R_{TS} = (10{,}000 \times VTSX) \div (3.3 - VTSX)$$

Termistors
Connect with outer 6 pin

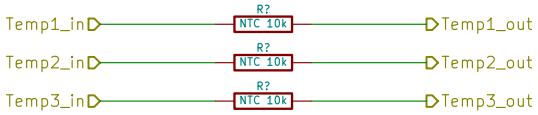

FESB		
Sheet: /BQ7***_high/NTC Temp monitor/		
File: Temp.sch		
Title:		
Size: A4	Date:	**Rev:**
KiCad E.D.A. kicad (after 2015-may-25 BZR unknown)-product		Id: 4/101

Mess bellow. Batt_ball circuit are sharing every pin expect last and first
So becase they are sharing pin they are sharing a Rin so only
last should have it.(IN every block).

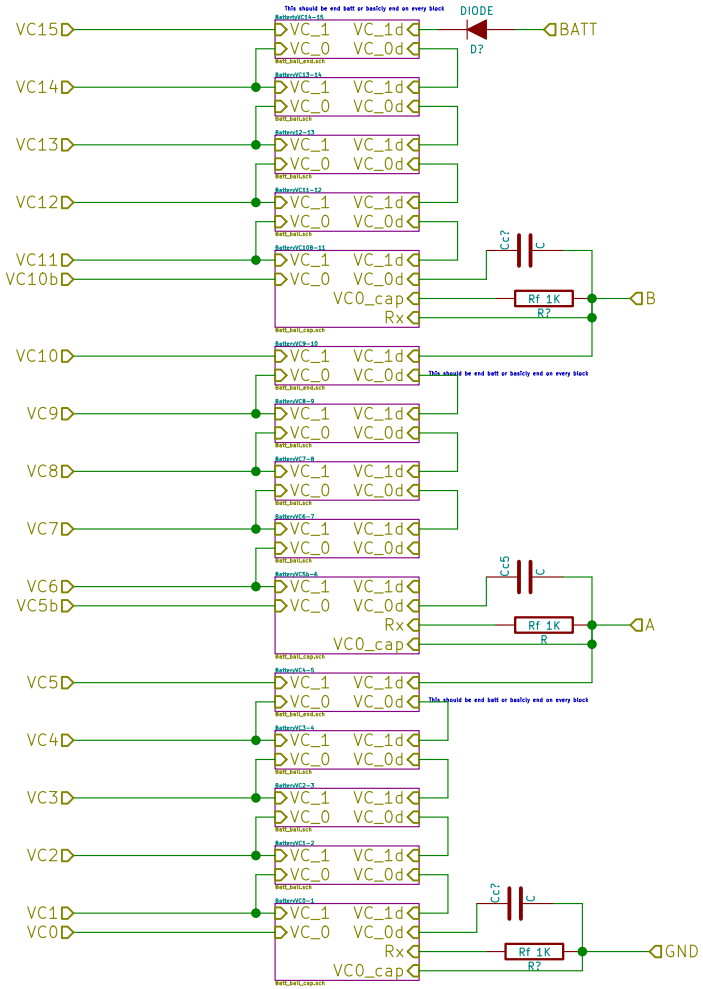

FESB		
Sheet: /BQ7***_high/Battery_pack/		
File: Batt_pack.sch		
Title: Battery Pack		
Size: A4	Date:	**Rev:**
KiCad E.D.A. kicad (after 2015-may-25 BZR unknown)-product		Id: 5/101

This is just mesurment and balancing circuit

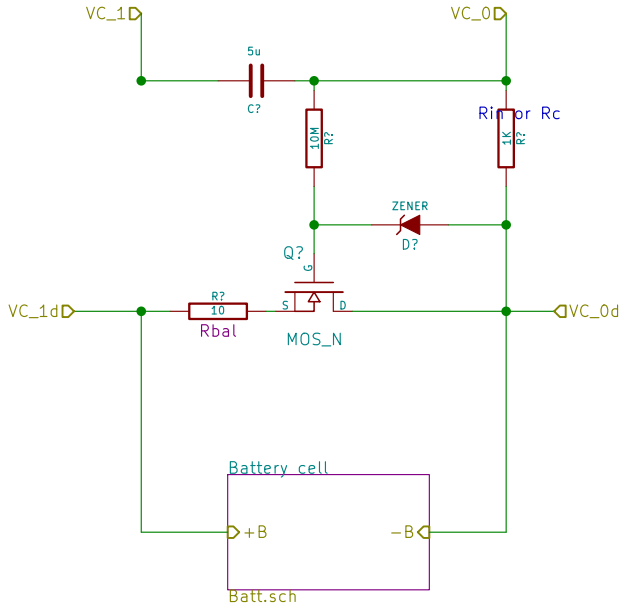

FESB		
Sheet: /BQ7***_high/Battery_pack/BatteryVC1-2/		
File: Batt_ball.sch		
Title:		
Size: A4	Date:	**Rev:**
KiCad E.D.A. kicad (after 2015-may-25 BZR unknown)-product		Id: 6/101

Sheet for battery cell

Put anything about possible battery in this sheet as component
description or should I say new field.

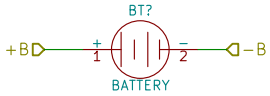

FESB

Sheet: /BQ7***_high/Battery_pack/BatteryVC1-2/Battery cell/
File: Batt.sch

Title:

Size: A4	Date:	**Rev:**
KiCad E.D.A. kicad (after 2015-may-25 BZR unknown)-product		Id: 7/101

This is just mesurment and balancing circuit

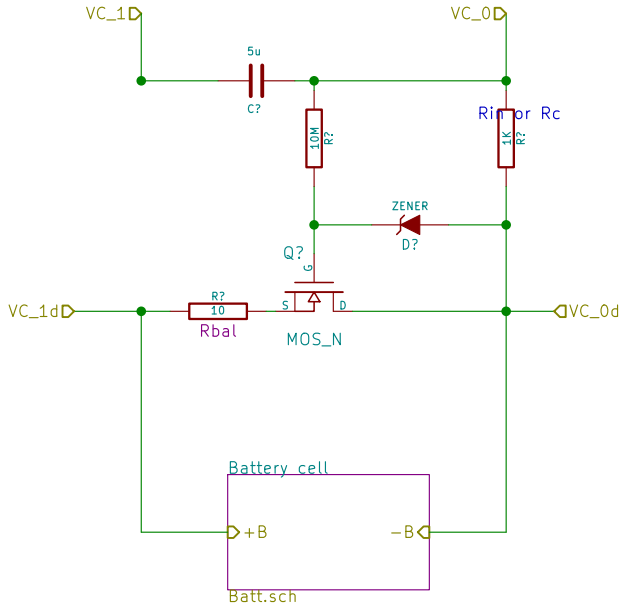

FESB		
Sheet: /BQ7***_high/Battery_pack/BatteryVC2-3/		
File: Batt_ball.sch		
Title:		
Size: A4	Date:	**Rev:**
KiCad E.D.A. kicad (after 2015-may-25 BZR unknown)-product		Id: 8/101

Sheet for battery cell

Put anything about possible battery in this sheet as component
description or should I say new field.

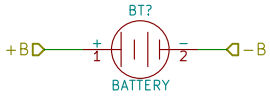

FESB

Sheet: /BQ7***_high/Battery_pack/BatteryVC2-3/Battery cell/
File: Batt.sch

Title:

Size: A4	Date:	**Rev:**
KiCad E.D.A. kicad (after 2015-may-25 BZR unknown)-product		Id: 9/101

This is just mesurment and balancing circuit

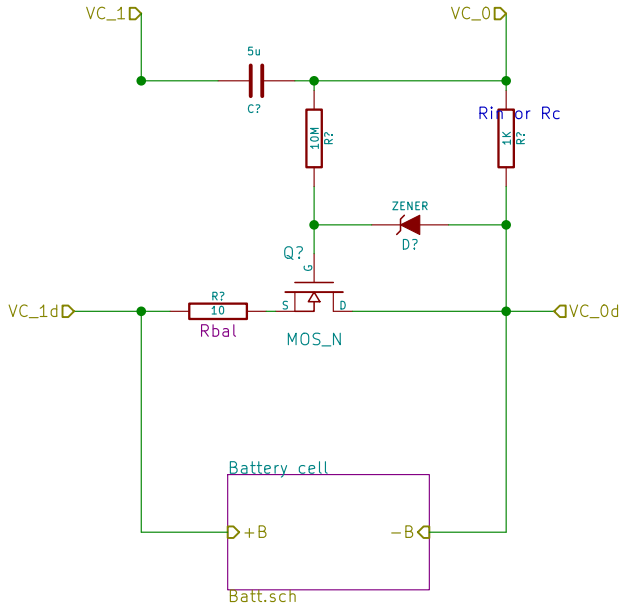

FESB		
Sheet: /BQ7***_high/Battery_pack/BatteryVC3-4/		
File: Batt_ball.sch		
Title:		
Size: A4	Date:	**Rev:**
KiCad E.D.A. kicad (after 2015-may-25 BZR unknown)-product		Id: 10/101

Sheet for battery cell

Put anything about possible battery in this sheet as component
description or should I say new field.

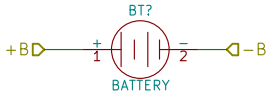

FESB

Sheet: /BQ7***_high/Battery_pack/BatteryVC3-4/Battery cell/
File: Batt.sch

Title:

Size: A4	Date:	**Rev:**
KiCad E.D.A. kicad (after 2015-may-25 BZR unknown)-product		Id: 11/101

This is just mesurment and balancing circuit

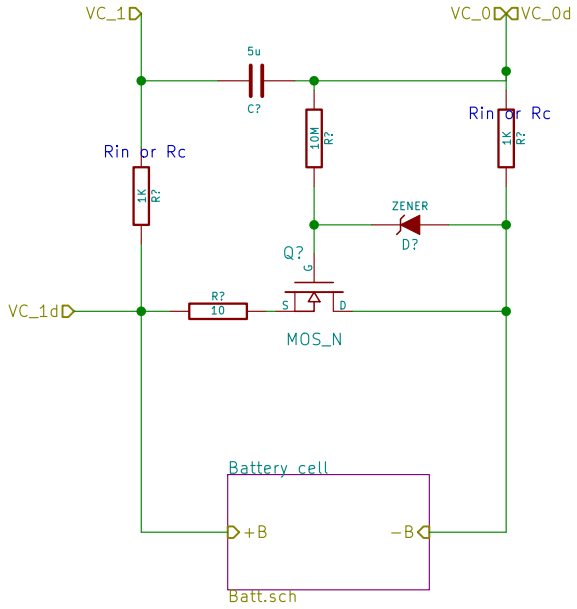

FESB		
Sheet: /BQ7***_high/Battery_pack/BatteryVC4-5/		
File: Batt_ball_end.sch		
Title:		
Size: A4	Date:	**Rev:**
KiCad E.D.A. kicad (after 2015-may-25 BZR unknown)-product		Id: 12/101

Sheet for battery cell

Put anything about possible battery in this sheet as component description or should I say new field.

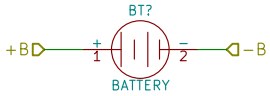

FESB

Sheet: /BQ7***_high/Battery_pack/BatteryVC4-5/Battery cell/
File: Batt.sch

Title:

Size: A4	Date:	**Rev:**
KiCad E.D.A. kicad (after 2015-may-25 BZR unknown)-product		Id: 13/101

This is just mesurment and balancing circuit

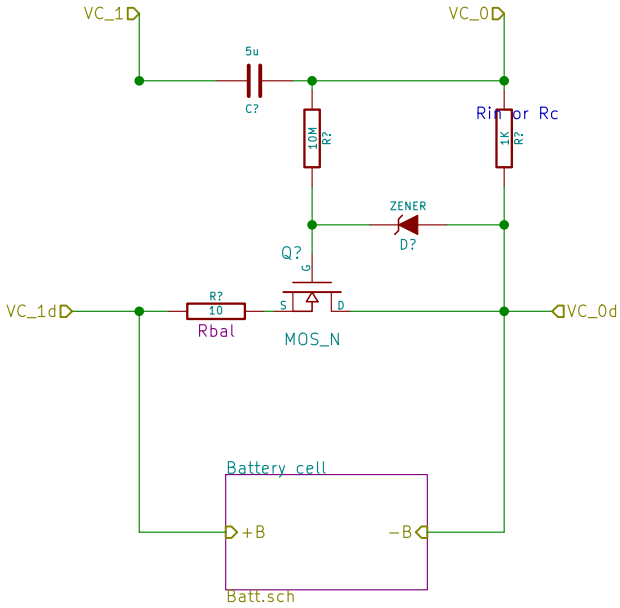

FESB		
Sheet: /BQ7***_high/Battery_pack/BatteryVC6-7/		
File: Batt_ball.sch		
Title:		
Size: A4	Date:	**Rev:**
KiCad E.D.A. kicad (after 2015-may-25 BZR unknown)-product		Id: 14/101

Sheet for battery cell

Put anything about possible battery in this sheet as component description or should I say new field.

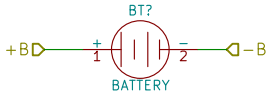

FESB

Sheet: /BQ7***_high/Battery_pack/BatteryVC6-7/Battery cell/
File: Batt.sch

Title:

Size: A4	Date:	**Rev:**
KiCad E.D.A. kicad (after 2015-may-25 BZR unknown)-product		Id: 15/101

This is just mesurment and balancing circuit

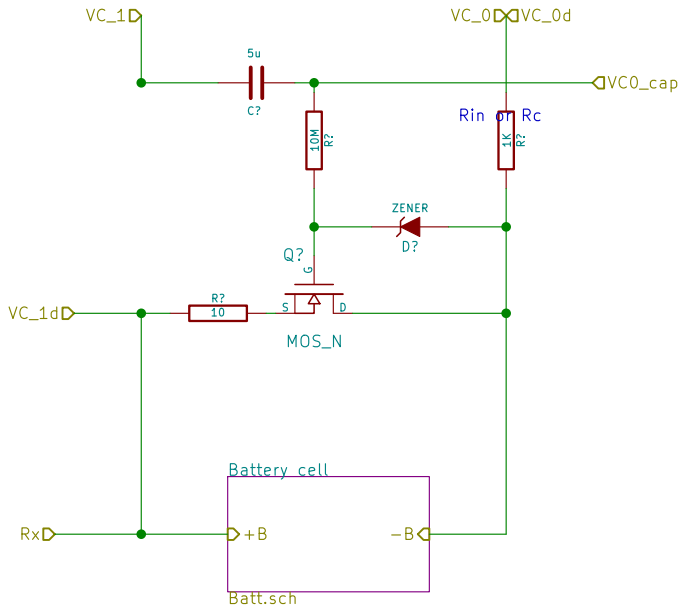

FESB		
Sheet: /BQ7***_high/Battery_pack/BatteryVC5b-6/		
File: Batt_ball_cap.sch		
Title:		
Size: A4	Date:	**Rev:**
KiCad E.D.A. kicad (after 2015-may-25 BZR unknown)-product		Id: 16/101

Sheet for battery cell

Put anything about possible battery in this sheet as component description or should I say new field.

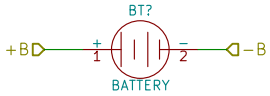

FESB

Sheet: /BQ7***_high/Battery_pack/BatteryVC5b-6/Battery cell/
File: Batt.sch

Title:

Size: A4	Date:	**Rev:**
KiCad E.D.A. kicad (after 2015-may-25 BZR unknown)-product		Id: 17/101

This is just mesurment and balancing circuit

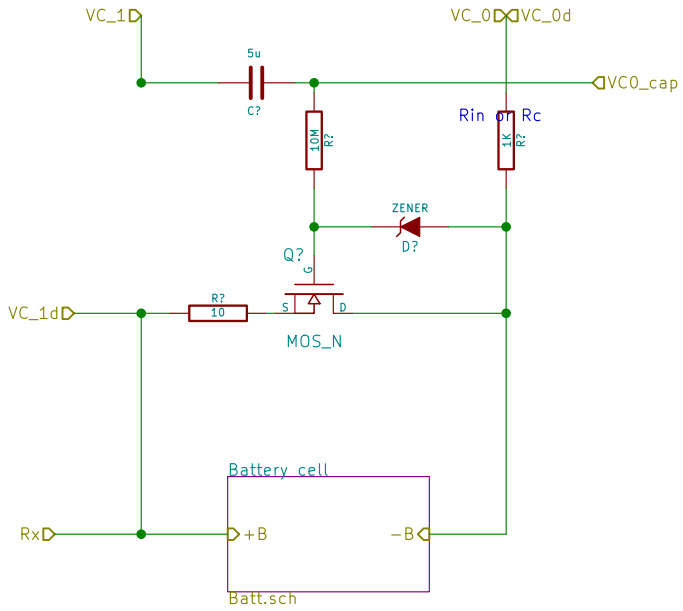

FESB		
Sheet: /BQ7***_high/Battery_pack/BatteryVC0-1/		
File: Batt_ball_cap.sch		
Title:		
Size: A4	Date:	**Rev:**
KiCad E.D.A. kicad (after 2015-may-25 BZR unknown)-product		Id: 18/101

Sheet for battery cell

Put anything about possible battery in this sheet as component
description or should I say new field.

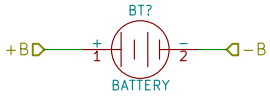

FESB

Sheet: /BQ7***_high/Battery_pack/BatteryVC0-1/Battery cell/
File: Batt.sch

Title:

Size: A4	Date:	**Rev:**
KiCad E.D.A. kicad (after 2015-may-25 BZR unknown)-product		Id: 19/101

This is just mesurment and balancing circuit

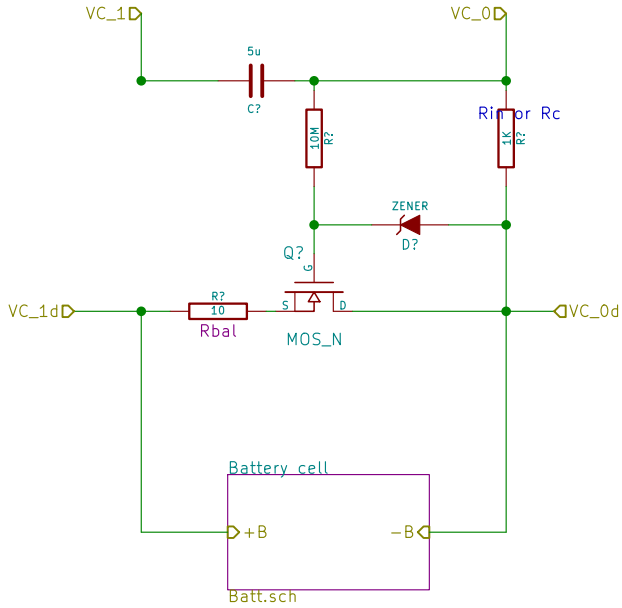

FESB		
Sheet: /BQ7***_high/Battery_pack/BatteryVC7-8/		
File: Batt_ball.sch		
Title:		
Size: A4	Date:	**Rev:**
KiCad E.D.A. kicad (after 2015-may-25 BZR unknown)-product		Id: 20/101

Sheet for battery cell

Put anything about possible battery in this sheet as component
description or should I say new field.

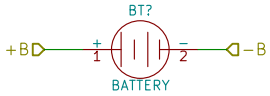

FESB

Sheet: /BQ7***_high/Battery_pack/BatteryVC7-8/Battery cell/
File: Batt.sch

Title:

Size: A4	Date:	**Rev:**
KiCad E.D.A. kicad (after 2015-may-25 BZR unknown)-product		Id: 21/101

This is just mesurment and balancing circuit

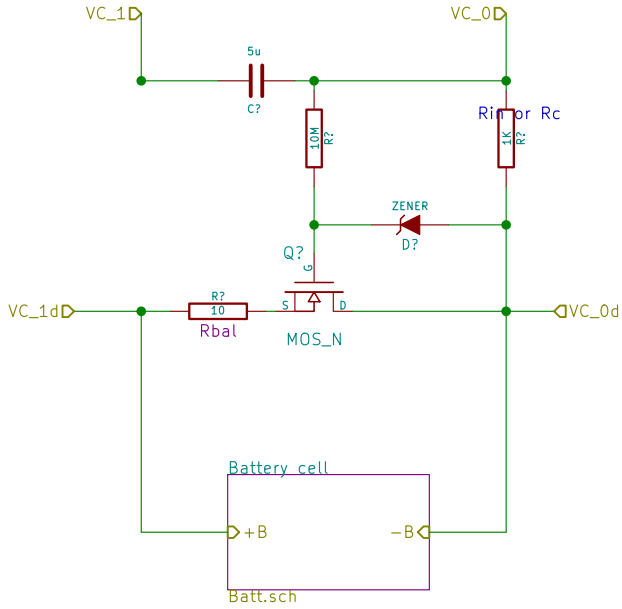

FESB		
Sheet: /BQ7***_high/Battery_pack/BatteryVC8-9/		
File: Batt_ball.sch		
Title:		
Size: A4	Date:	**Rev:**
KiCad E.D.A. kicad (after 2015-may-25 BZR unknown)-product		Id: 22/101

Sheet for battery cell

Put anything about possible battery in this sheet as component
description or should I say new field.

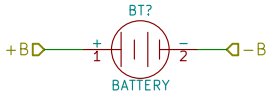

FESB

Sheet: /BQ7***_high/Battery_pack/BatteryVC8-9/Battery cell/
File: Batt.sch

Title:

Size: A4	Date:	**Rev:**
KiCad E.D.A. kicad (after 2015-may-25 BZR unknown)-product		Id: 23/101

This is just mesurment and balancing circuit

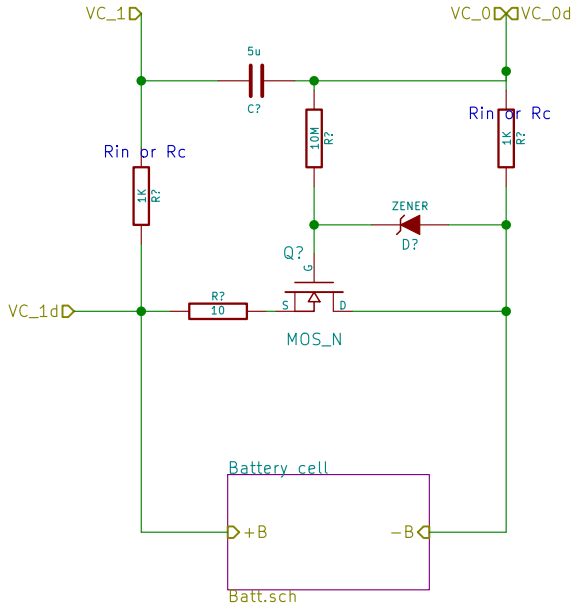

FESB		
Sheet: /BQ7***_high/Battery_pack/BatteryVC9-10/		
File: Batt_ball_end.sch		
Title:		
Size: A4	Date:	**Rev:**
KiCad E.D.A. kicad (after 2015-may-25 BZR unknown)-product		Id: 24/101

Sheet for battery cell

Put anything about possible battery in this sheet as component
description or should I say new field.

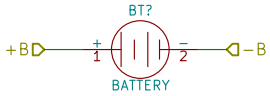

FESB

Sheet: /BQ7***_high/Battery_pack/BatteryVC9-10/Battery cell/
File: Batt.sch

Title:

Size: A4	Date:	**Rev:**
KiCad E.D.A. kicad (after 2015-may-25 BZR unknown)-product		Id: 25/101

This is just mesurment and balancing circuit

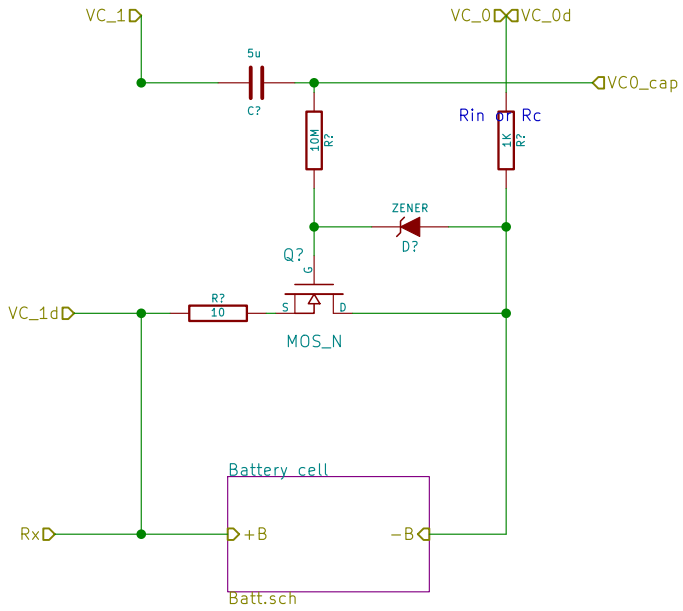

FESB		
Sheet: /BQ7***_high/Battery_pack/BatteryVC10B-11/		
File: Batt_ball_cap.sch		
Title:		
Size: A4	Date:	**Rev:**
KiCad E.D.A. kicad (after 2015-may-25 BZR unknown)-product		Id: 26/101

Sheet for battery cell

Put anything about possible battery in this sheet as component
description or should I say new field.

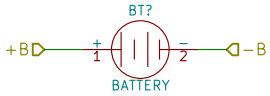

FESB

Sheet: /BQ7***_high/Battery_pack/BatteryVC10B-11/Battery cell/
File: Batt.sch

Title:

Size: A4	Date:	**Rev:**
KiCad E.D.A. kicad (after 2015-may-25 BZR unknown)-product		Id: 27/101

This is just mesurment and balancing circuit

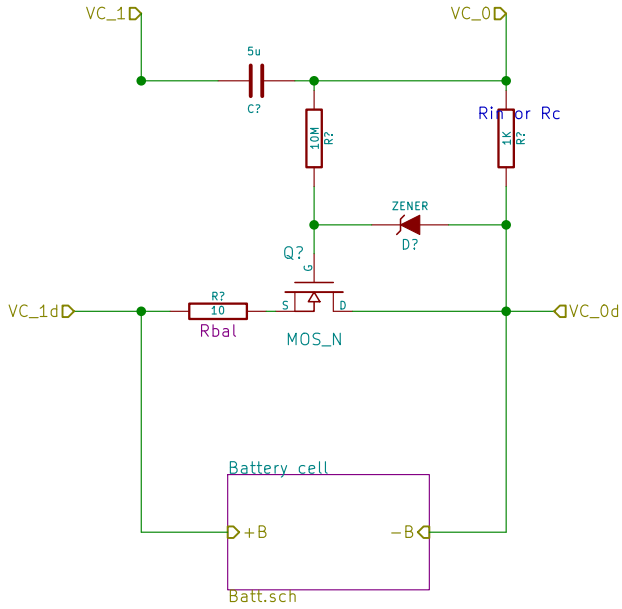

FESB		
Sheet: /BQ7***_high/Battery_pack/BatteryVC11-12/		
File: Batt_ball.sch		
Title:		
Size: A4	Date:	**Rev:**
KiCad E.D.A. kicad (after 2015-may-25 BZR unknown)-product		Id: 28/101

Sheet for battery cell

Put anything about possible battery in this sheet as component
description or should I say new field.

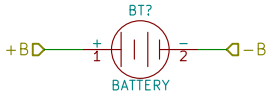

FESB

Sheet: /BQ7***_high/Battery_pack/BatteryVC11-12/Battery cell/
File: Batt.sch

Title:

Size: A4	Date:	**Rev:**
KiCad E.D.A. kicad (after 2015-may-25 BZR unknown)-product		Id: 29/101

This is just mesurment and balancing circuit

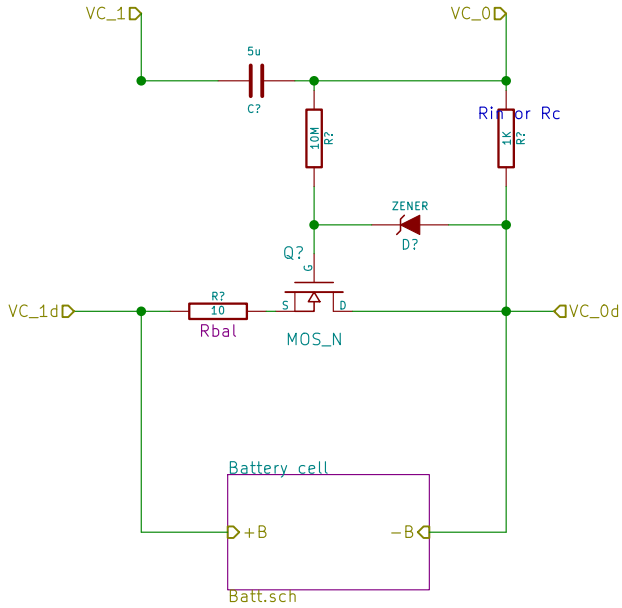

FESB		
Sheet: /BQ7***_high/Battery_pack/Battery12-13/		
File: Batt_ball.sch		
Title:		
Size: A4	Date:	**Rev:**
KiCad E.D.A. kicad (after 2015-may-25 BZR unknown)-product		Id: 30/101

Sheet for battery cell

Put anything about possible battery in this sheet as component
description or should I say new field.

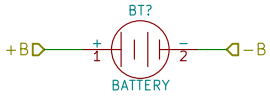

FESB

Sheet: /BQ7***_high/Battery_pack/Battery12-13/Battery cell/
File: Batt.sch

Title:

Size: A4	Date:	**Rev:**
KiCad E.D.A. kicad (after 2015-may-25 BZR unknown)-product		Id: 31/101

This is just mesurment and balancing circuit

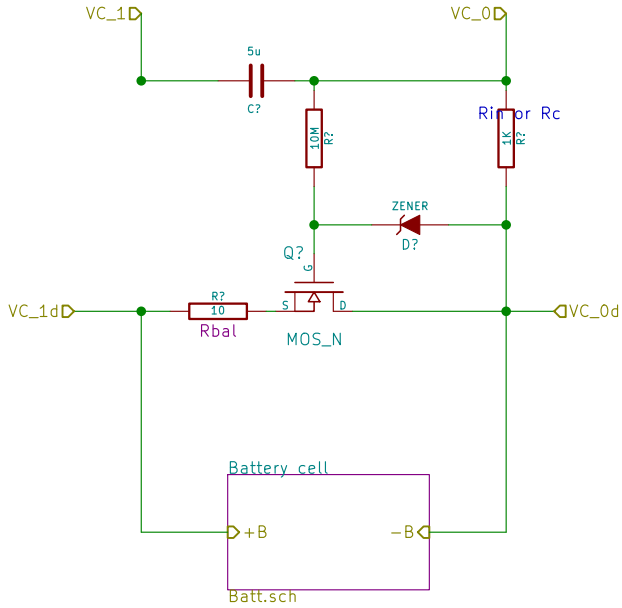

FESB		
Sheet: /BQ7***_high/Battery_pack/BatteryVC13-14/		
File: Batt_ball.sch		
Title:		
Size: A4	Date:	**Rev:**
KiCad E.D.A. kicad (after 2015-may-25 BZR unknown)-product		Id: 32/101

Sheet for battery cell

Put anything about possible battery in this sheet as component
description or should I say new field.

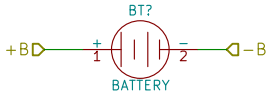

FESB

Sheet: /BQ7***_high/Battery_pack/BatteryVC13-14/Battery cell/
File: Batt.sch

Title:

Size: A4	Date:	**Rev:**
KiCad E.D.A. kicad (after 2015-may-25 BZR unknown)-product		Id: 33/101

This is just mesurment and balancing circuit

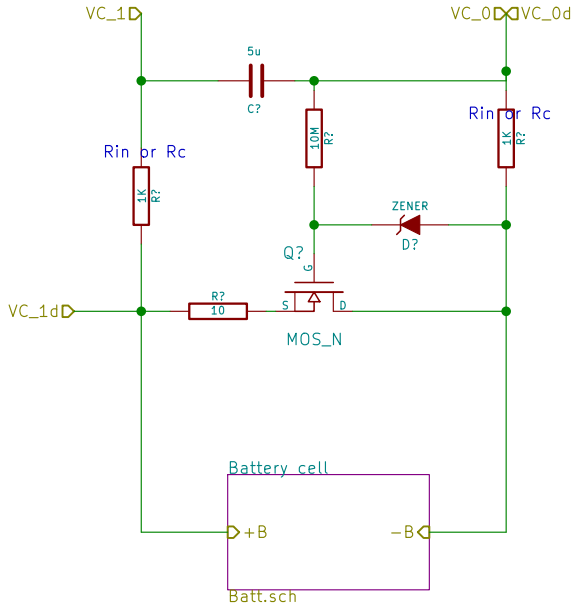

FESB		
Sheet: /BQ7***_high/Battery_pack/BattertyVC14-15/		
File: Batt_ball_end.sch		
Title:		
Size: A4	Date:	**Rev:**
KiCad E.D.A. kicad (after 2015-may-25 BZR unknown)-product		Id: 34/101

Sheet for battery cell

Put anything about possible battery in this sheet as component
description or should I say new field.

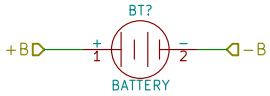

FESB

Sheet: /BQ7***_high/Battery_pack/BattertyVC14−15/Battery cell/
File: Batt.sch

Title:

Size: A4	Date:	**Rev:**
KiCad E.D.A. kicad (after 2015−may−25 BZR unknown)−product		Id: 35/101

Sheet for battery cell

Put anything about possible battery in this sheet as component description or should I say new field.

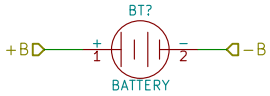

FESB		
Sheet: /Battery cell/ File: Batt.sch		
Title:		
Size: A4	Date:	**Rev:**
KiCad E.D.A. kicad (after 2015-may-25 BZR unknown)-product		Id: 36/101

Mess bellow. Batt_ball circuit are sharing every pin expect last and first
So becase they are sharing pin they are sharing a Rin so only
last should have it.(IN every block).

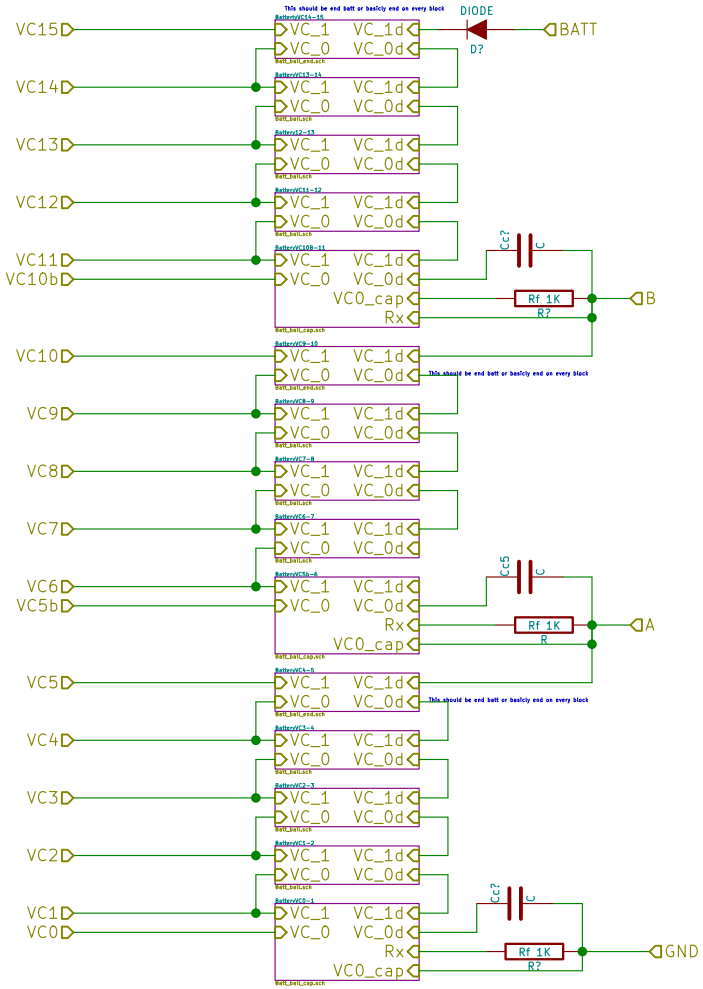

FESB		
Sheet: /Battery_pack/		
File: Batt_pack.sch		
Title: Battery Pack		
Size: A4	Date:	**Rev:**
KiCad E.D.A. kicad (after 2015-may-25 BZR unknown)-product		Id: 37/101

This is just mesurment and balancing circuit

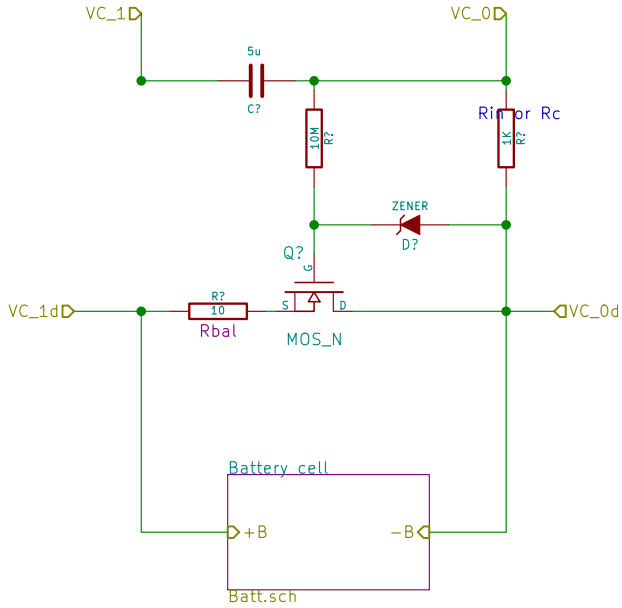

FESB		
Sheet: /Battery_pack/BatteryVC1-2/		
File: Batt_ball.sch		
Title:		
Size: A4	Date:	**Rev:**
KiCad E.D.A. kicad (after 2015-may-25 BZR unknown)-product		Id: 38/101

Sheet for battery cell

Put anything about possible battery in this sheet as component description or should I say new field.

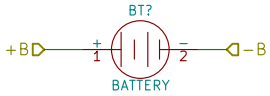

FESB

Sheet: /Battery_pack/BatteryVC1-2/Battery cell/
File: Batt.sch

Title:

Size: A4	Date:	**Rev:**
KiCad E.D.A. kicad (after 2015-may-25 BZR unknown)-product		Id: 39/101

This is just mesurment and balancing circuit

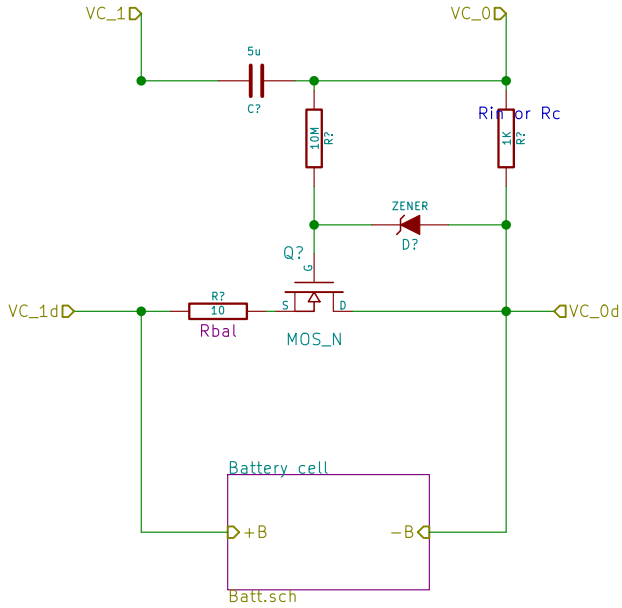

FESB		
Sheet: /Battery_pack/BatteryVC2-3/		
File: Batt_ball.sch		
Title:		
Size: A4	Date:	**Rev:**
KiCad E.D.A. kicad (after 2015-may-25 BZR unknown)-product		Id: 40/101

Sheet for battery cell

Put anything about possible battery in this sheet as component
description or should I say new field.

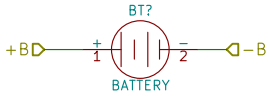

FESB

Sheet: /Battery_pack/BatteryVC2-3/Battery cell/
File: Batt.sch

Title:

Size: A4	Date:	**Rev:**
KiCad E.D.A. kicad (after 2015-may-25 BZR unknown)-product		Id: 41/101

This is just mesurment and balancing circuit

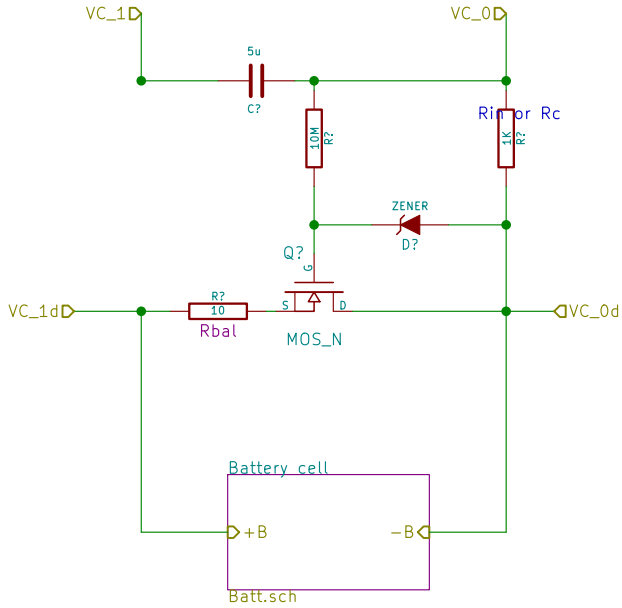

FESB		
Sheet: /Battery_pack/BatteryVC3-4/		
File: Batt_ball.sch		
Title:		
Size: A4	Date:	**Rev:**
KiCad E.D.A. kicad (after 2015-may-25 BZR unknown)-product		Id: 42/101

Sheet for battery cell

Put anything about possible battery in this sheet as component description or should I say new field.

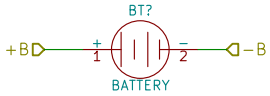

FESB

Sheet: /Battery_pack/BatteryVC3-4/Battery cell/
File: Batt.sch

Title:

Size: A4	Date:	**Rev:**
KiCad E.D.A. kicad (after 2015-may-25 BZR unknown)-product		Id: 43/101

This is just mesurment and balancing circuit

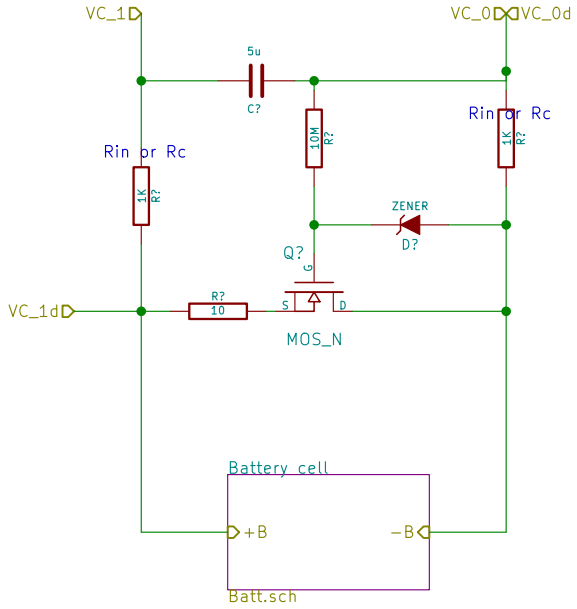

FESB		
Sheet: /Battery_pack/BatteryVC4-5/		
File: Batt_ball_end.sch		
Title:		
Size: A4	Date:	**Rev:**
KiCad E.D.A. kicad (after 2015-may-25 BZR unknown)-product		Id: 44/101

Sheet for battery cell

Put anything about possible battery in this sheet as component description or should I say new field.

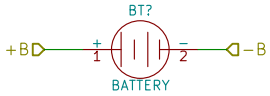

FESB

Sheet: /Battery_pack/BatteryVC4-5/Battery cell/
File: Batt.sch

Title:

Size: A4	Date:	**Rev:**
KiCad E.D.A. kicad (after 2015-may-25 BZR unknown)-product		Id: 45/101

This is just mesurment and balancing circuit

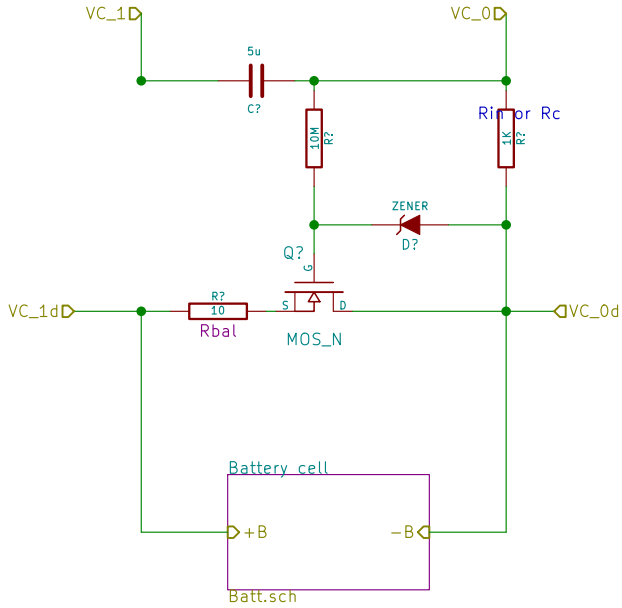

FESB		
Sheet: /Battery_pack/BatteryVC6-7/		
File: Batt_ball.sch		
Title:		
Size: A4	Date:	**Rev:**
KiCad E.D.A. kicad (after 2015-may-25 BZR unknown)-product		Id: 46/101

Sheet for battery cell

Put anything about possible battery in this sheet as component
description or should I say new field.

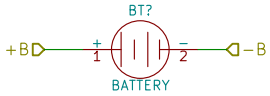

FESB

Sheet: /Battery_pack/BatteryVC6-7/Battery cell/
File: Batt.sch

Title:

Size: A4	Date:	**Rev:**
KiCad E.D.A. kicad (after 2015-may-25 BZR unknown)-product		Id: 47/101

This is just mesurment and balancing circuit

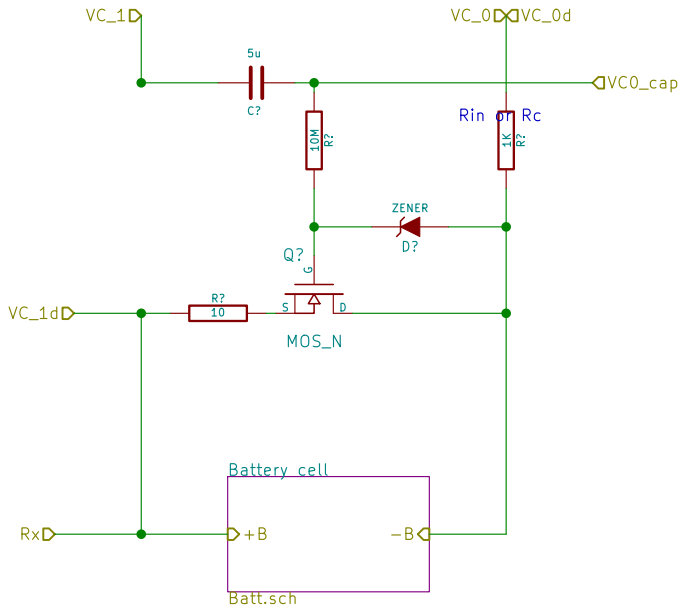

FESB		
Sheet: /Battery_pack/BatteryVC5b-6/		
File: Batt_ball_cap.sch		
Title:		
Size: A4	Date:	**Rev:**
KiCad E.D.A. kicad (after 2015-may-25 BZR unknown)-product		Id: 48/101

Sheet for battery cell

Put anything about possible battery in this sheet as component
description or should I say new field.

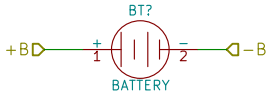

FESB

Sheet: /Battery_pack/BatteryVC5b-6/Battery cell/
File: Batt.sch

Title:

Size: A4	Date:	**Rev:**
KiCad E.D.A. kicad (after 2015-may-25 BZR unknown)-product		Id: 49/101

This is just mesurment and balancing circuit

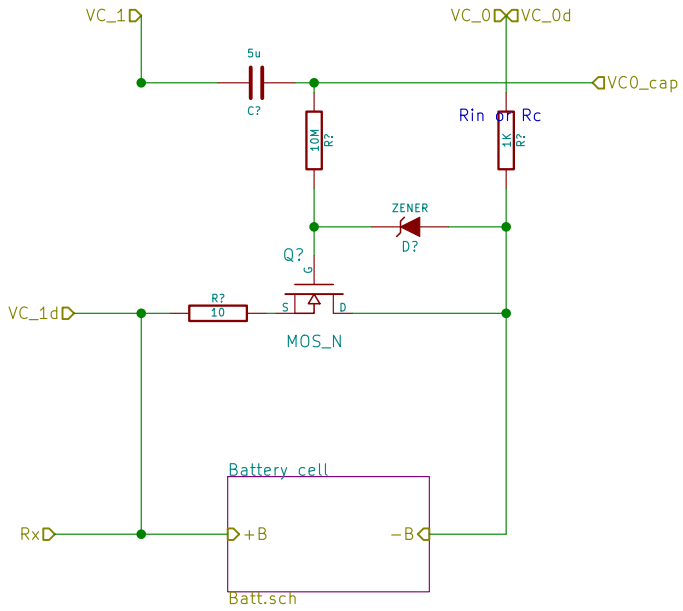

FESB		
Sheet: /Battery_pack/BatteryVC0-1/		
File: Batt_ball_cap.sch		
Title:		
Size: A4	Date:	**Rev:**
KiCad E.D.A. kicad (after 2015-may-25 BZR unknown)-product		Id: 50/101

Sheet for battery cell

Put anything about possible battery in this sheet as component description or should I say new field.

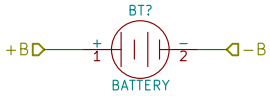

FESB

Sheet: /Battery_pack/BatteryVC0-1/Battery cell/
File: Batt.sch

Title:

Size: A4	Date:	**Rev:**
KiCad E.D.A. kicad (after 2015-may-25 BZR unknown)-product		Id: 51/101

This is just mesurment and balancing circuit

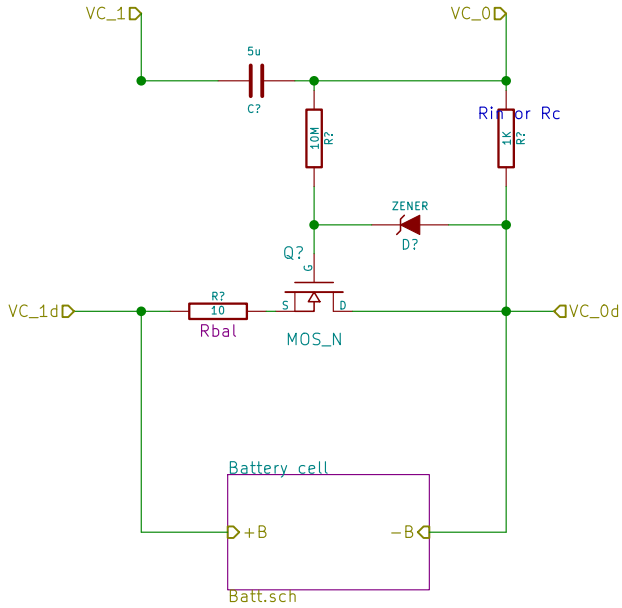

FESB		
Sheet: /Battery_pack/BatteryVC7-8/		
File: Batt_ball.sch		
Title:		
Size: A4	Date:	**Rev:**
KiCad E.D.A. kicad (after 2015-may-25 BZR unknown)-product		Id: 52/101

Sheet for battery cell

Put anything about possible battery in this sheet as component
description or should I say new field.

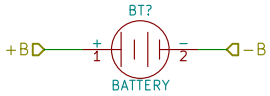

FESB

Sheet: /Battery_pack/BatteryVC7-8/Battery cell/
File: Batt.sch

Title:

Size: A4	Date:	**Rev:**
KiCad E.D.A. kicad (after 2015-may-25 BZR unknown)-product		Id: 53/101

This is just mesurment and balancing circuit

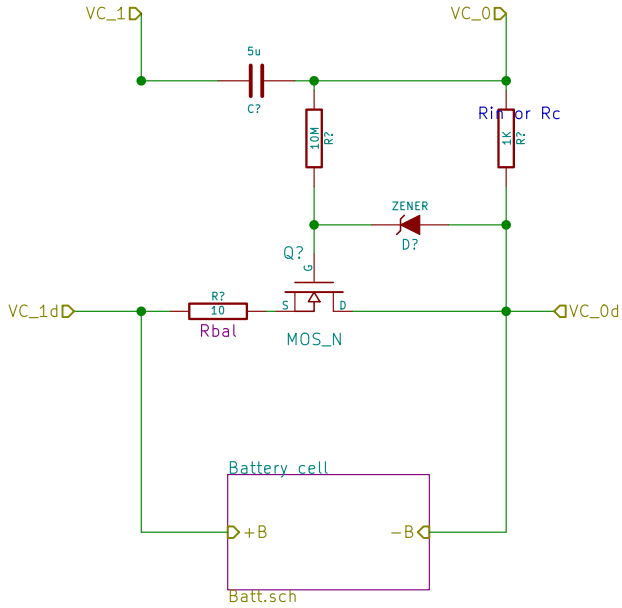

FESB		
Sheet: /Battery_pack/BatteryVC8-9/		
File: Batt_ball.sch		
Title:		
Size: A4	Date:	**Rev:**
KiCad E.D.A. kicad (after 2015-may-25 BZR unknown)-product		Id: 54/101

Sheet for battery cell

Put anything about possible battery in this sheet as component description or should I say new field.

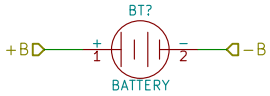

FESB

Sheet: /Battery_pack/BatteryVC8-9/Battery cell/
File: Batt.sch

Title:

Size: A4	Date:	**Rev:**
KiCad E.D.A. kicad (after 2015-may-25 BZR unknown)-product		Id: 55/101

This is just mesurment and balancing circuit

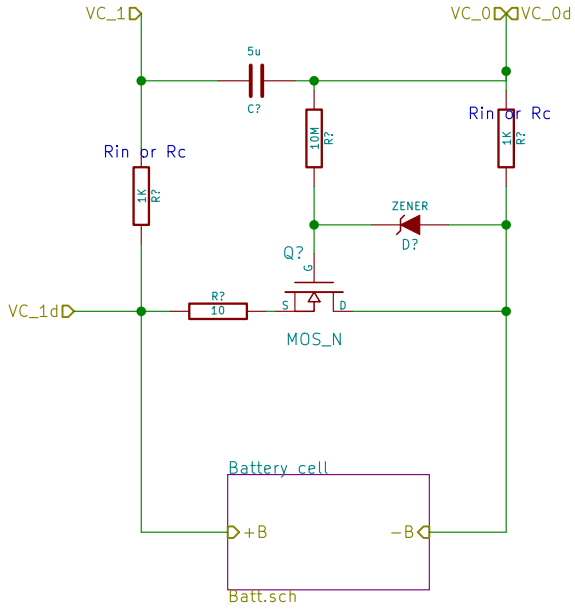

FESB		
Sheet: /Battery_pack/BatteryVC9-10/		
File: Batt_ball_end.sch		
Title:		
Size: A4	Date:	**Rev:**
KiCad E.D.A. kicad (after 2015-may-25 BZR unknown)-product		Id: 56/101

Sheet for battery cell

Put anything about possible battery in this sheet as component description or should I say new field.

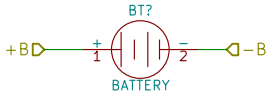

FESB

Sheet: /Battery_pack/BatteryVC9-10/Battery cell/
File: Batt.sch

Title:

Size: A4	Date:	**Rev:**
KiCad E.D.A. kicad (after 2015-may-25 BZR unknown)-product		Id: 57/101

This is just mesurment and balancing circuit

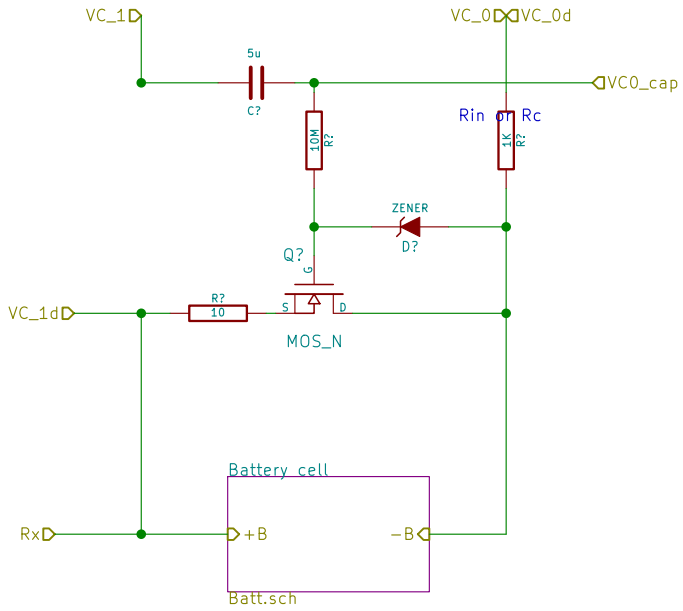

FESB		
Sheet: /Battery_pack/BatteryVC10B-11/		
File: Batt_ball_cap.sch		
Title:		
Size: A4	Date:	**Rev:**
KiCad E.D.A. kicad (after 2015-may-25 BZR unknown)-product		Id: 58/101

Sheet for battery cell

Put anything about possible battery in this sheet as component description or should I say new field.

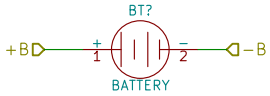

FESB

Sheet: /Battery_pack/BatteryVC10B-11/Battery cell/
File: Batt.sch

Title:

Size: A4	Date:	**Rev:**
KiCad E.D.A. kicad (after 2015-may-25 BZR unknown)-product		Id: 59/101

This is just mesurment and balancing circuit

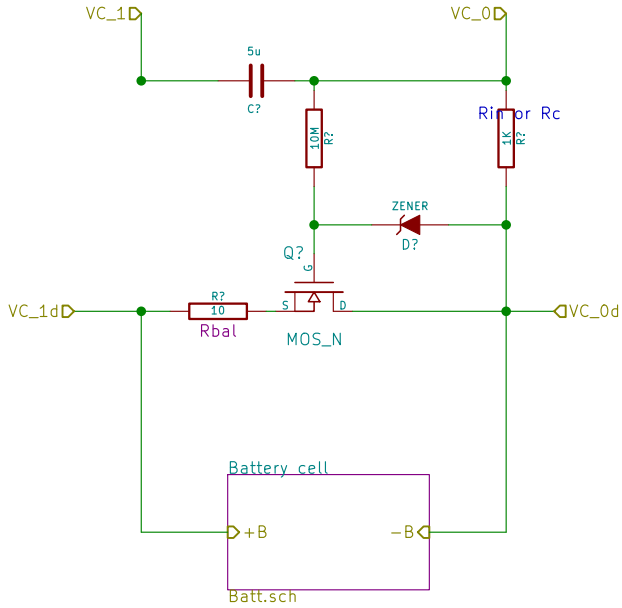

FESB		
Sheet: /Battery_pack/BatteryVC11-12/		
File: Batt_ball.sch		
Title:		
Size: A4	Date:	**Rev:**
KiCad E.D.A. kicad (after 2015-may-25 BZR unknown)-product		Id: 60/101

Sheet for battery cell

Put anything about possible battery in this sheet as component description or should I say new field.

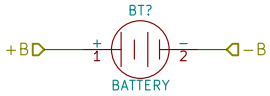

FESB

Sheet: /Battery_pack/BatteryVC11-12/Battery cell/
File: Batt.sch

Title:

Size: A4	Date:	**Rev:**
KiCad E.D.A. kicad (after 2015-may-25 BZR unknown)-product		Id: 61/101

This is just mesurment and balancing circuit

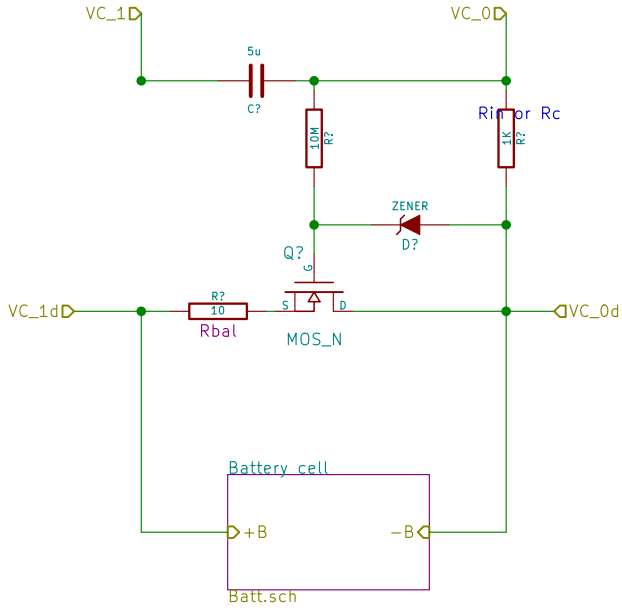

FESB		
Sheet: /Battery_pack/Battery12-13/		
File: Batt_ball.sch		
Title:		
Size: A4	Date:	**Rev:**
KiCad E.D.A. kicad (after 2015-may-25 BZR unknown)-product		Id: 62/101

Sheet for battery cell

Put anything about possible battery in this sheet as component description or should I say new field.

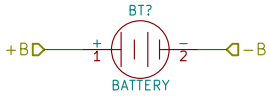

FESB

Sheet: /Battery_pack/Battery12-13/Battery cell/
File: Batt.sch

Title:

Size: A4	Date:	**Rev:**
KiCad E.D.A. kicad (after 2015-may-25 BZR unknown)-product		Id: 63/101

This is just mesurment and balancing circuit

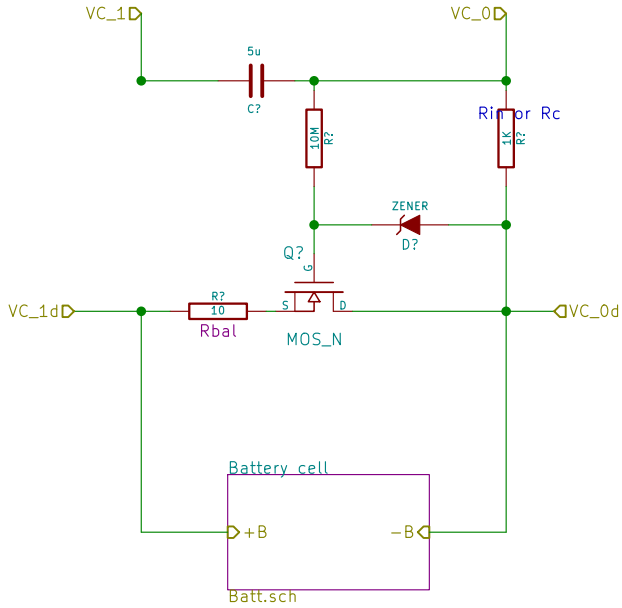

FESB		
Sheet: /Battery_pack/BatteryVC13-14/		
File: Batt_ball.sch		
Title:		
Size: A4	Date:	**Rev:**
KiCad E.D.A. kicad (after 2015-may-25 BZR unknown)-product		Id: 64/101

Sheet for battery cell

Put anything about possible battery in this sheet as component description or should I say new field.

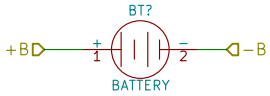

FESB

Sheet: /Battery_pack/BatteryVC13-14/Battery cell/
File: Batt.sch

Title:

Size: A4	Date:	**Rev:**
KiCad E.D.A. kicad (after 2015-may-25 BZR unknown)-product		Id: 65/101

This is just mesurment and balancing circuit

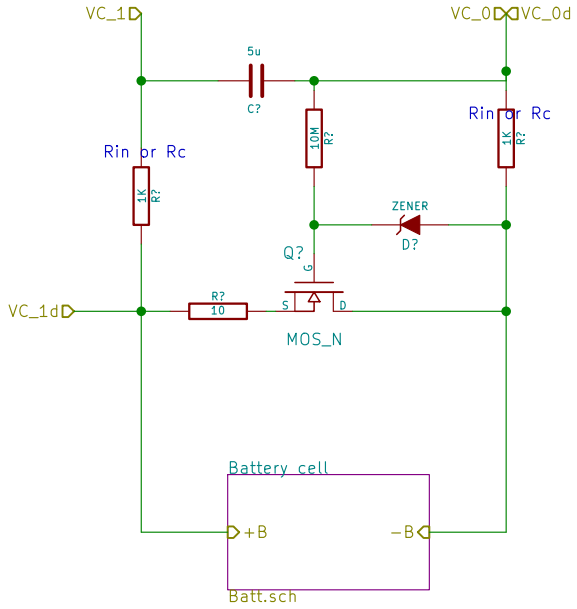

FESB		
Sheet: /Battery_pack/BattertyVC14-15/		
File: Batt_ball_end.sch		
Title:		
Size: A4	Date:	**Rev:**
KiCad E.D.A. kicad (after 2015-may-25 BZR unknown)-product		Id: 66/101

Sheet for battery cell

Put anything about possible battery in this sheet as component description or should I say new field.

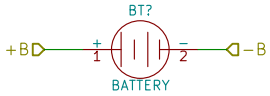

FESB

Sheet: /Battery_pack/BattertyVC14-15/Battery cell/
File: Batt.sch

Title:

Size: A4	Date:	**Rev:**
KiCad E.D.A. kicad (after 2015-may-25 BZR unknown)-product		Id: 67/101

Bq7*** circuit its basicly disconnetced from other stuff looking a voltage of every cell and if needed discharging them.(balancing) Controled by a MCU two of them because we have 30 batterys.

VSS is same as ground symbol in this sheet

Because a voltage to REGSRC is to high we are going to use FET for limiting

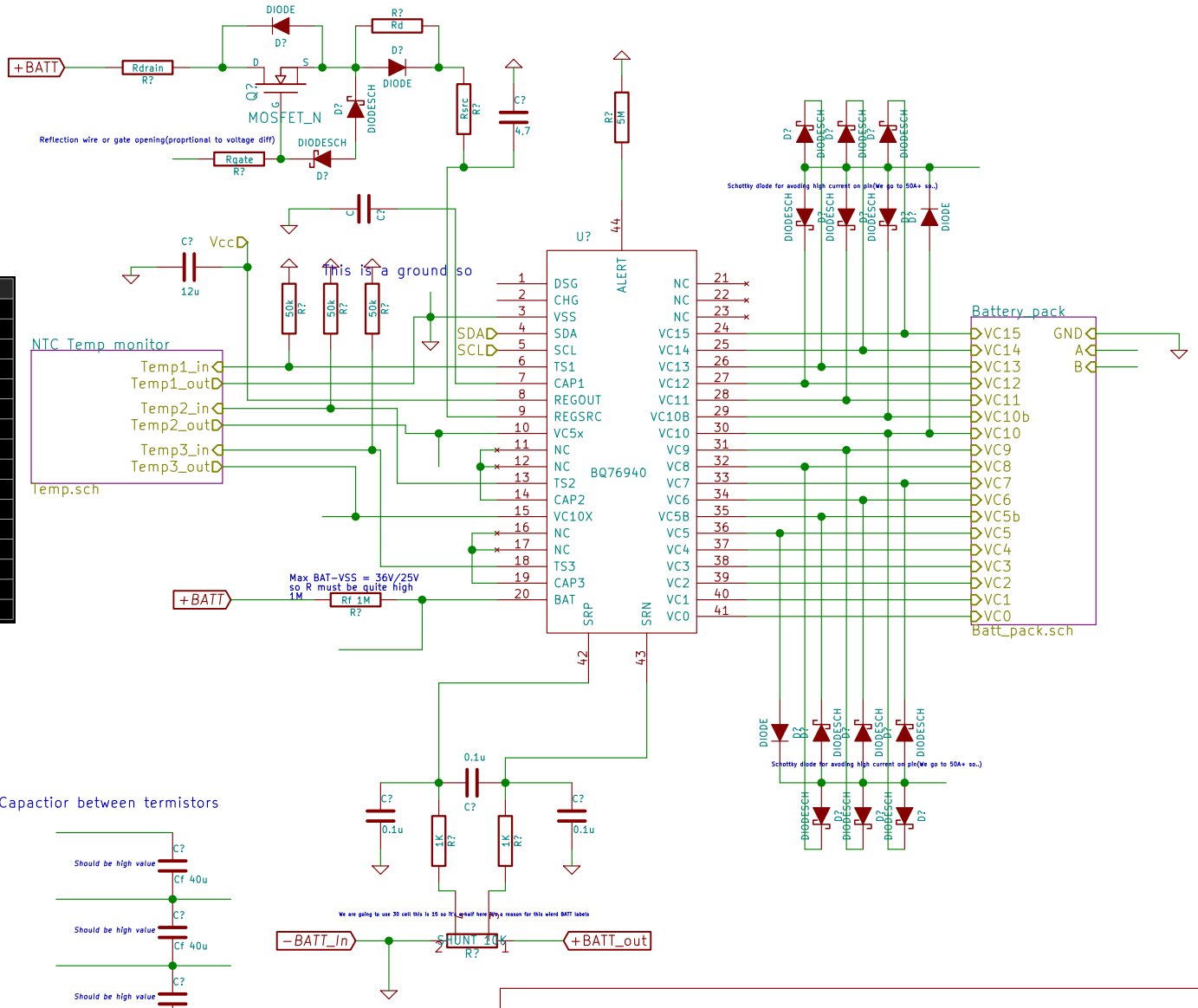

Pin configuration

PIN	NAME	TYPE	DESCRIPTION
1	DSG	O	Discharge FET driver
2	CHG	O	Charge FET driver
3	VSS	—	Chip VSS
4	SDA	I/O	I²C communication to the host controller
5	SCL	I	I²C communication to the host controller
6	TS1	I	Thermistor #1 positive terminal(1)
7	CAP1	O	Capacitor to VSS
8	REGOUT	P	Output LDO
9	REGSRC	I	Input source for output LDO
10	VC5X	P	Thermistor #2 negative terminal
11	NC	—	No connect (short to CAP2)
12	NC	—	No connect (short to CAP2)
13	TS2	I	Thermistor #2 positive terminal(1)
14	CAP2	O	Capacitor to VC5X
15	VC10X	P	Thermistor #3 negative terminal
16	NC	—	No connect (short to CAP3)

PIN	NAME	TYPE	DESCRIPTION
17	NC	—	No connect (short to CAP3)
18	TS3	I	Thermistor #3 positive terminal(1)
19	CAP3	O	Capacitor to VC10X
20	BAT	P	Battery (top-most) terminal
21	NC	—	No connect
22	NC	—	No connect
23	NC	—	No connect
24	VC15	I	Sense voltage for 15th cell positive terminal
25	VC14	I	Sense voltage for 14th cell positive terminal
26	VC13	I	Sense voltage for 13th cell positive terminal
27	VC12	I	Sense voltage for 12th cell positive terminal
28	VC11	I	Sense voltage for 11th cell positive terminal
29	VC10B	I	Sense voltage for 10th cell negative terminal
30	VC10	I	Sense voltage for 10th cell positive terminal
31	VC9	I	Sense voltage for 9th cell positive terminal
32	VC8	I	Sense voltage for 8th cell positive terminal
33	VC7	I	Sense voltage for 7th cell positive terminal
34	VC6	I	Sense voltage for 6th cell positive terminal
35	VC5B	I	Sense voltage for 6th cell negative terminal
36	VC5	I	Sense voltage for 5th cell positive terminal
37	VC4	I	Sense voltage for 4th cell positive terminal
38	VC3	I	Sense voltage for 3rd cell positive terminal
39	VC2	I	Sense voltage for 2nd cell positive terminal
40	VC1	I	Sense voltage for 1st cell positive terminal
41	VC0	I	Sense voltage for 1st cell negative terminal
42	SRP	I	Negative current sense (nearest VSS)
43	SRN	I	Positive current sense
44	ALERT	I/O	Alert output and override input

FESB

Sheet: /BQ7****_low/

File: BQ7_low.sch

Title: BQ76940

Size: A4	Date:	Rev:
KiCad E.D.A. kicad (after 2015-may-25 BZR unknown)-product		Id: 68/101

Missing only for NTC so we can convert to Temp

$$V_{TSX} = (\text{ADC in Decimal}) \times 382\ \mu V/LSB$$

$$R_{TS} = (10{,}000 \times VTSX) \div (3.3 - VTSX)$$

Termistors
Connect with outer 6 pin

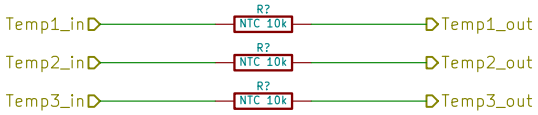

FESB		
Sheet: /BQ7****_low/NTC Temp monitor/		
File: Temp.sch		
Title:		
Size: A4	Date:	**Rev:**
KiCad E.D.A. kicad (after 2015-may-25 BZR unknown)-product		Id: 69/101

Mess bellow. Batt_ball circuit are sharing every pin expect last and first
So becase they are sharing pin they are sharing a Rin so only
last should have it.(IN every block).

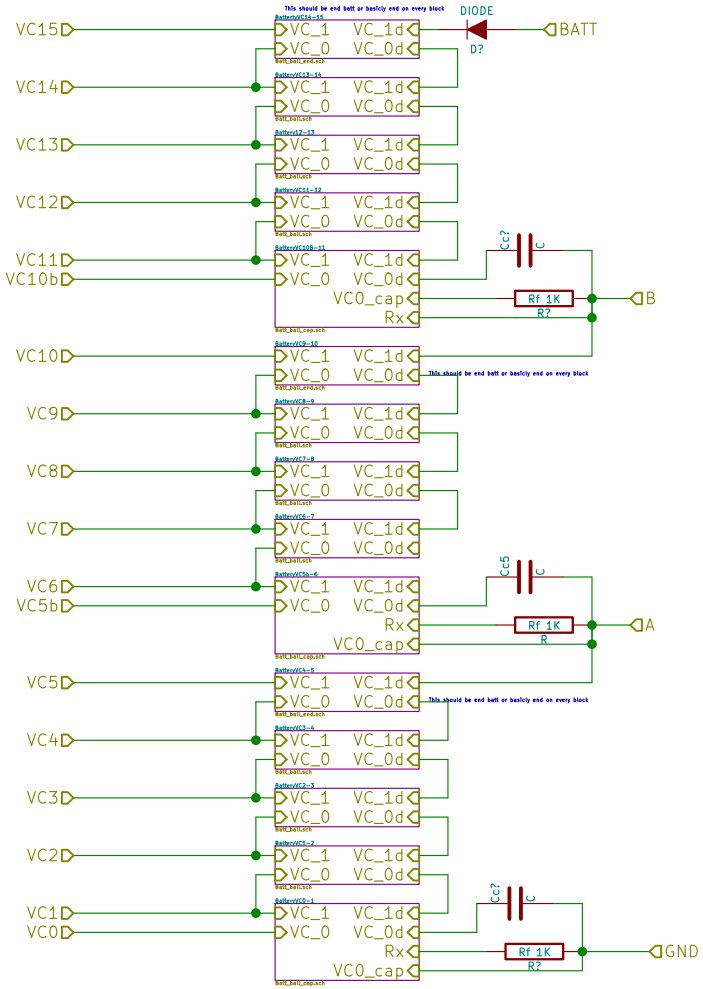

FESB		
Sheet: /BQ7****_low/Battery_pack/		
File: Batt_pack.sch		
Title: Battery Pack		
Size: A4	Date:	**Rev:**
KiCad E.D.A. kicad (after 2015-may-25 BZR unknown)-product		Id: 70/101

This is just mesurment and balancing circuit

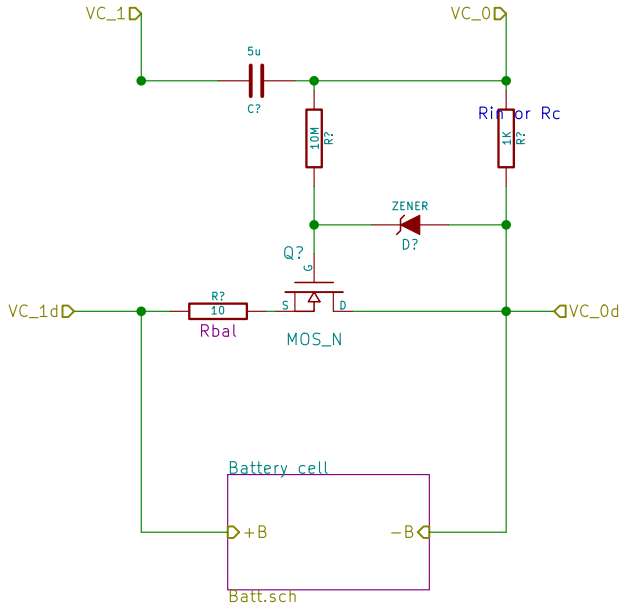

FESB		
Sheet: /BQ7****_low/Battery_pack/BatteryVC1-2/		
File: Batt_ball.sch		
Title:		
Size: A4	Date:	**Rev:**
KiCad E.D.A. kicad (after 2015-may-25 BZR unknown)-product		Id: 71/101

Sheet for battery cell

Put anything about possible battery in this sheet as component
description or should I say new field.

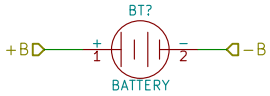

FESB

Sheet: /BQ7****_low/Battery_pack/BatteryVC1-2/Battery cell/
File: Batt.sch

Title:

Size: A4	Date:	**Rev:**
KiCad E.D.A. kicad (after 2015-may-25 BZR unknown)-product		Id: 72/101

This is just mesurment and balancing circuit

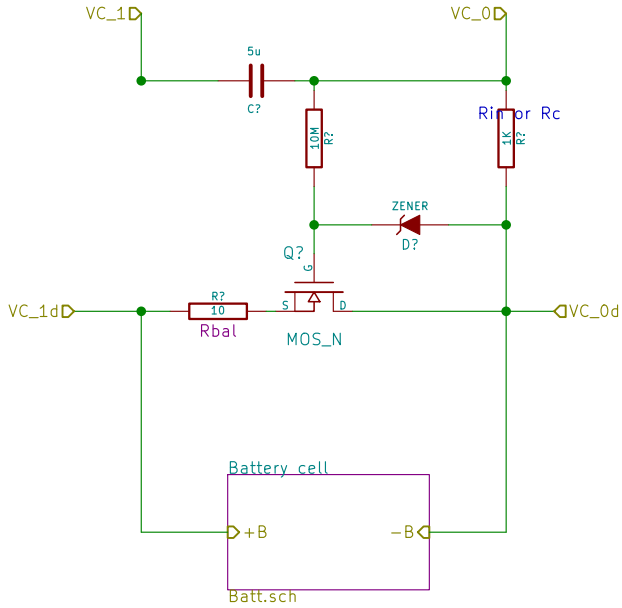

FESB		
Sheet: /BQ7****_low/Battery_pack/BatteryVC2-3/		
File: Batt_ball.sch		
Title:		
Size: A4	Date:	**Rev:**
KiCad E.D.A. kicad (after 2015-may-25 BZR unknown)-product		Id: 73/101

Sheet for battery cell

Put anything about possible battery in this sheet as component
description or should I say new field.

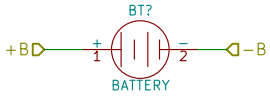

FESB

Sheet: /BQ7****_low/Battery_pack/BatteryVC2-3/Battery cell/
File: Batt.sch

Title:

Size: A4	Date:	**Rev:**
KiCad E.D.A. kicad (after 2015-may-25 BZR unknown)-product		Id: 74/101

This is just mesurment and balancing circuit

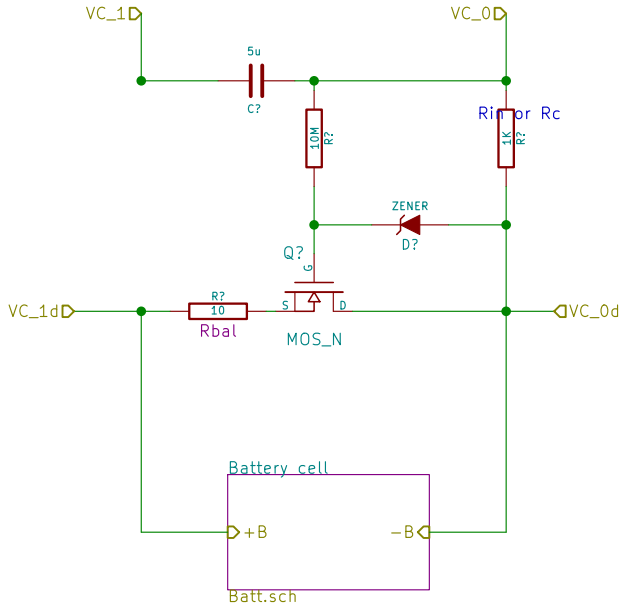

FESB		
Sheet: /BQ7****_low/Battery_pack/BatteryVC3-4/		
File: Batt_ball.sch		
Title:		
Size: A4	Date:	**Rev:**
KiCad E.D.A. kicad (after 2015-may-25 BZR unknown)-product		Id: 75/101

Sheet for battery cell

Put anything about possible battery in this sheet as component
description or should I say new field.

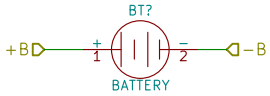

FESB

Sheet: /BQ7****_low/Battery_pack/BatteryVC3-4/Battery cell/
File: Batt.sch

Title:

Size: A4	Date:	**Rev:**
KiCad E.D.A. kicad (after 2015-may-25 BZR unknown)-product		Id: 76/101

This is just mesurment and balancing circuit

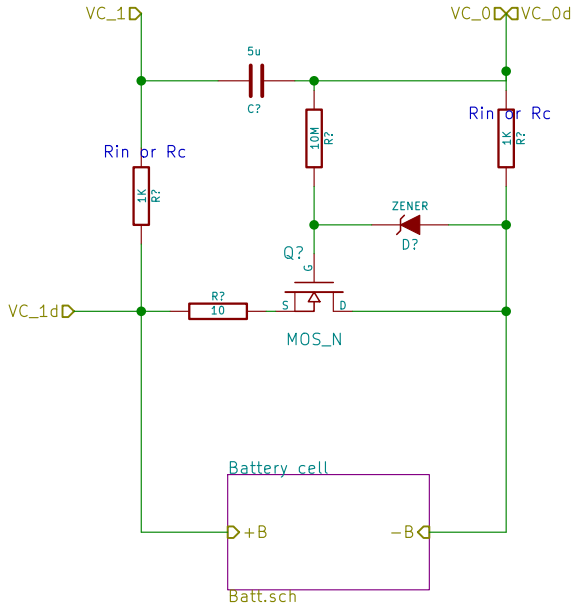

FESB		
Sheet: /BQ7****_low/Battery_pack/BatteryVC4-5/		
File: Batt_ball_end.sch		
Title:		
Size: A4	Date:	**Rev:**
KiCad E.D.A. kicad (after 2015-may-25 BZR unknown)-product		Id: 77/101

Sheet for battery cell

Put anything about possible battery in this sheet as component description or should I say new field.

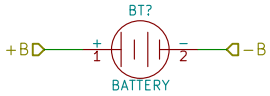

FESB

Sheet: /BQ7****_low/Battery_pack/BatteryVC4-5/Battery cell/

File: Batt.sch

Title:

Size: A4	Date:	**Rev:**
KiCad E.D.A. kicad (after 2015-may-25 BZR unknown)-product		Id: 78/101

This is just mesurment and balancing circuit

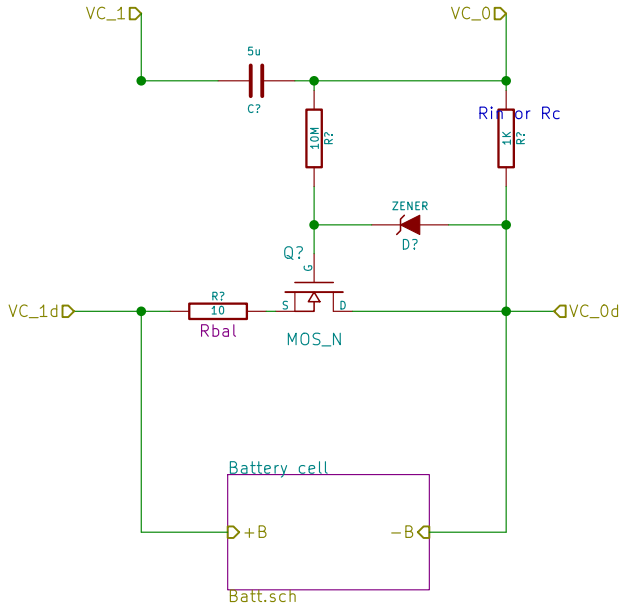

FESB		
Sheet: /BQ7****_low/Battery_pack/BatteryVC6-7/		
File: Batt_ball.sch		
Title:		
Size: A4	Date:	**Rev:**
KiCad E.D.A. kicad (after 2015-may-25 BZR unknown)-product		Id: 79/101

Sheet for battery cell

Put anything about possible battery in this sheet as component
description or should I say new field.

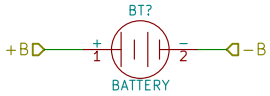

FESB

Sheet: /BQ7****_low/Battery_pack/BatteryVC6-7/Battery cell/
File: Batt.sch

Title:

Size: A4	Date:	**Rev:**
KiCad E.D.A. kicad (after 2015-may-25 BZR unknown)-product		Id: 80/101

This is just mesurment and balancing circuit

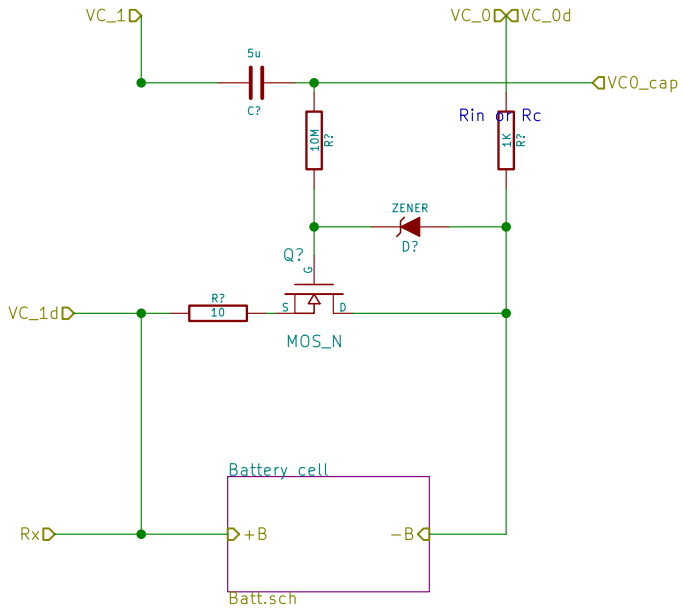

FESB		
Sheet: /BQ7****_low/Battery_pack/BatteryVC5b-6/		
File: Batt_ball_cap.sch		
Title:		
Size: A4	Date:	**Rev:**
KiCad E.D.A. kicad (after 2015-may-25 BZR unknown)-product		Id: 81/101

Sheet for battery cell

Put anything about possible battery in this sheet as component description or should I say new field.

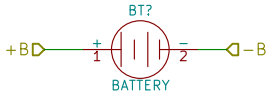

FESB

Sheet: /BQ7****_low/Battery_pack/BatteryVC5b-6/Battery cell/
File: Batt.sch

Title:

Size: A4	Date:	**Rev:**
KiCad E.D.A. kicad (after 2015-may-25 BZR unknown)-product		Id: 82/101

This is just mesurment and balancing circuit

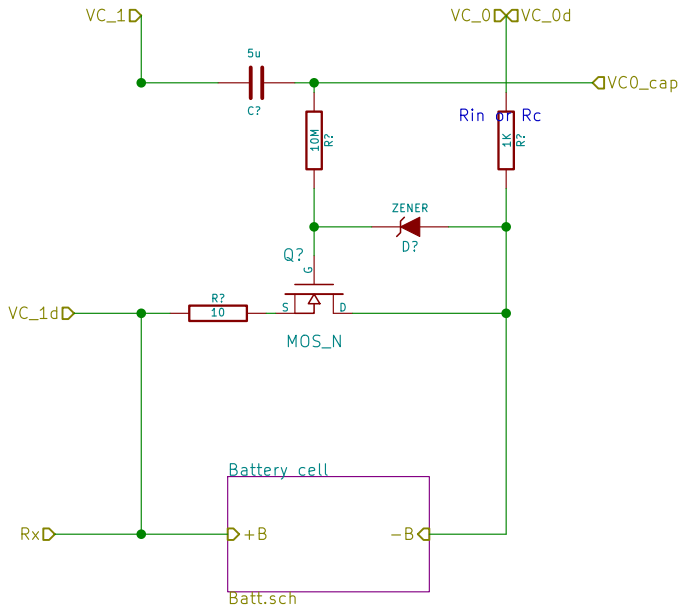

FESB		
Sheet: /BQ7****_low/Battery_pack/BatteryVC0-1/		
File: Batt_ball_cap.sch		
Title:		
Size: A4	Date:	**Rev:**
KiCad E.D.A. kicad (after 2015-may-25 BZR unknown)-product		Id: 83/101

Sheet for battery cell

Put anything about possible battery in this sheet as component description or should I say new field.

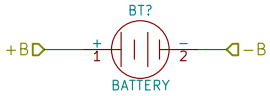

FESB

Sheet: /BQ7****_low/Battery_pack/BatteryVC0-1/Battery cell/

File: Batt.sch

Title:

Size: A4	Date:	**Rev:**
KiCad E.D.A. kicad (after 2015-may-25 BZR unknown)-product		Id: 84/101

This is just mesurment and balancing circuit

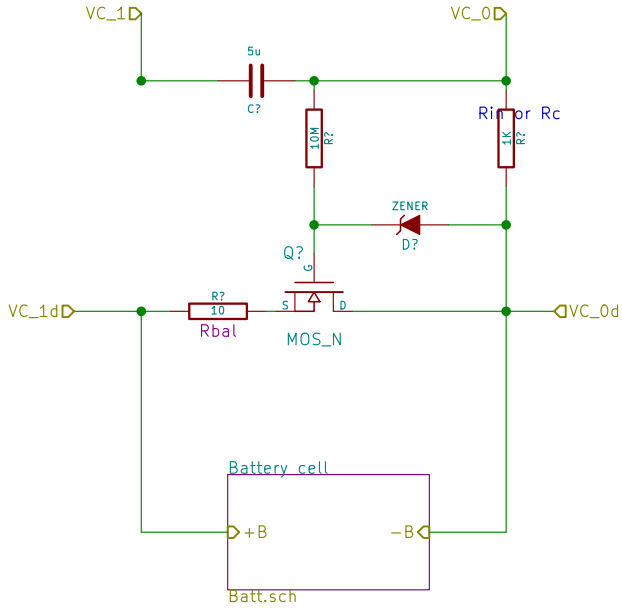

FESB		
Sheet: /BQ7****_low/Battery_pack/BatteryVC7-8/		
File: Batt_ball.sch		
Title:		
Size: A4	Date:	**Rev:**
KiCad E.D.A. kicad (after 2015-may-25 BZR unknown)-product		Id: 85/101

Sheet for battery cell

Put anything about possible battery in this sheet as component description or should I say new field.

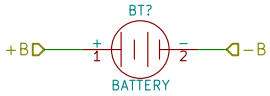

FESB

Sheet: /BQ7****_low/Battery_pack/BatteryVC7-8/Battery cell/
File: Batt.sch

Title:

Size: A4	Date:	**Rev:**
KiCad E.D.A. kicad (after 2015-may-25 BZR unknown)-product		Id: 86/101

This is just mesurment and balancing circuit

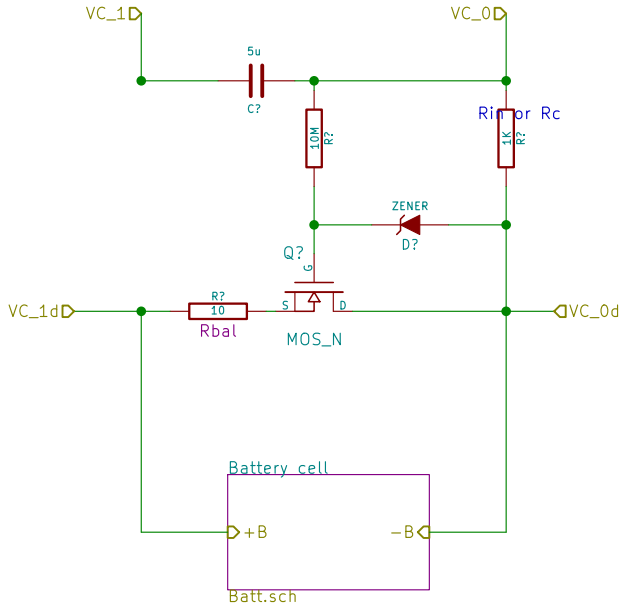

FESB		
Sheet: /BQ7****_low/Battery_pack/BatteryVC8-9/		
File: Batt_ball.sch		
Title:		
Size: A4	Date:	**Rev:**
KiCad E.D.A. kicad (after 2015-may-25 BZR unknown)-product		Id: 87/101

Sheet for battery cell

Put anything about possible battery in this sheet as component
description or should I say new field.

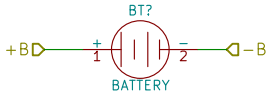

FESB

Sheet: /BQ7****_low/Battery_pack/BatteryVC8-9/Battery cell/
File: Batt.sch

Title:

Size: A4	Date:	**Rev:**
KiCad E.D.A. kicad (after 2015-may-25 BZR unknown)-product		Id: 88/101

This is just mesurment and balancing circuit

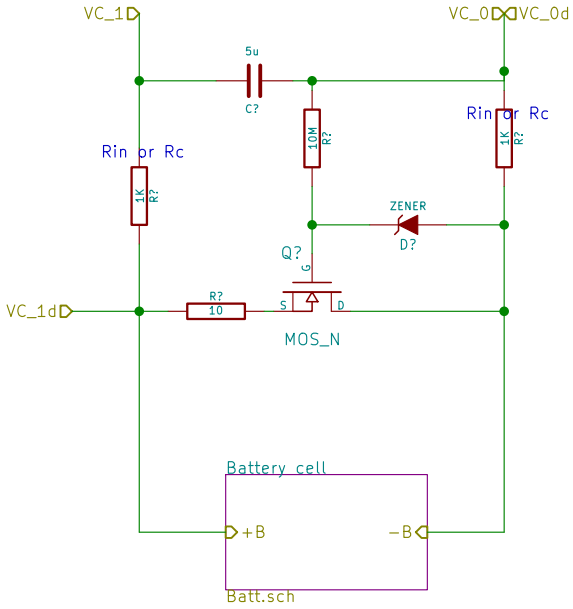

FESB		
Sheet: /BQ7****_low/Battery_pack/BatteryVC9-10/		
File: Batt_ball_end.sch		
Title:		
Size: A4	Date:	**Rev:**
KiCad E.D.A. kicad (after 2015-may-25 BZR unknown)-product		Id: 89/101

Sheet for battery cell

Put anything about possible battery in this sheet as component
description or should I say new field.

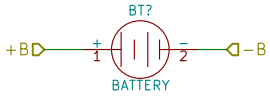

FESB

Sheet: /BQ7****_low/Battery_pack/BatteryVC9-10/Battery cell/
File: Batt.sch

Title:

Size: A4	Date:	**Rev:**
KiCad E.D.A. kicad (after 2015-may-25 BZR unknown)-product		Id: 90/101

This is just mesurment and balancing circuit

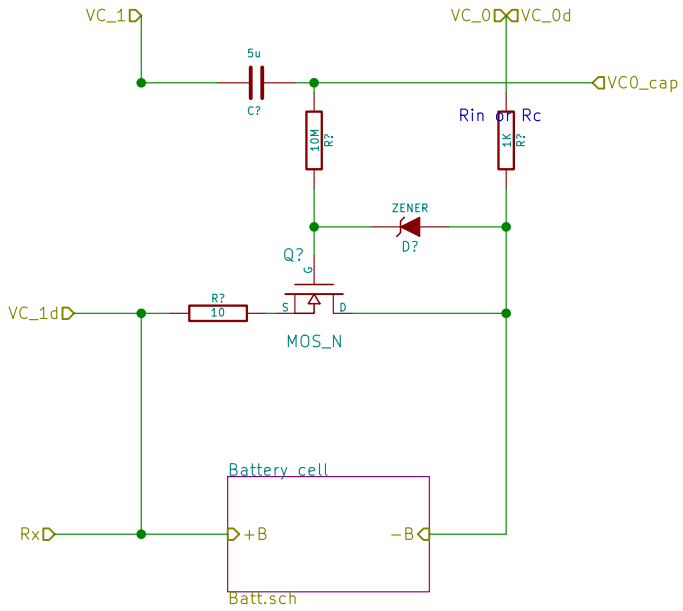

FESB		
Sheet: /BQ7****_low/Battery_pack/BatteryVC10B-11/		
File: Batt_ball_cap.sch		
Title:		
Size: A4	Date:	**Rev:**
KiCad E.D.A. kicad (after 2015-may-25 BZR unknown)-product		Id: 91/101

Sheet for battery cell

Put anything about possible battery in this sheet as component
description or should I say new field.

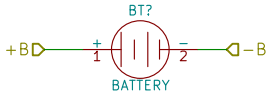

FESB

Sheet: /BQ7****_low/Battery_pack/BatteryVC10B-11/Battery cell/
File: Batt.sch

Title:

Size: A4	Date:	**Rev:**
KiCad E.D.A. kicad (after 2015-may-25 BZR unknown)-product		Id: 92/101

This is just mesurment and balancing circuit

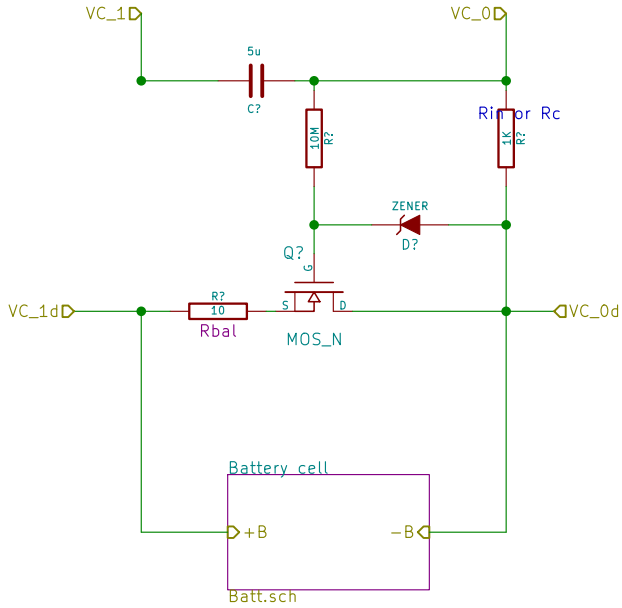

FESB		
Sheet: /BQ7****_low/Battery_pack/BatteryVC11-12/		
File: Batt_ball.sch		
Title:		
Size: A4	Date:	**Rev:**
KiCad E.D.A. kicad (after 2015-may-25 BZR unknown)-product		Id: 93/101

Sheet for battery cell

Put anything about possible battery in this sheet as component
description or should I say new field.

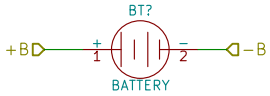

FESB

Sheet: /BQ7****_low/Battery_pack/BatteryVC11-12/Battery cell/
File: Batt.sch

Title:

Size: A4	Date:	**Rev:**
KiCad E.D.A. kicad (after 2015-may-25 BZR unknown)-product		Id: 94/101

This is just mesurment and balancing circuit

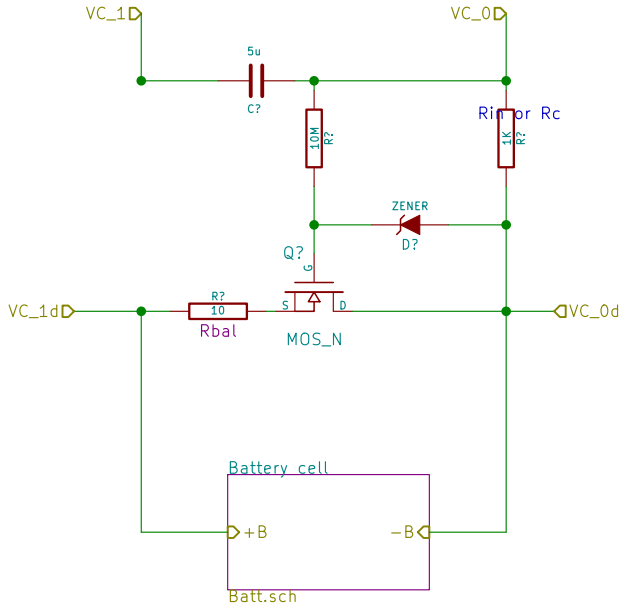

FESB		
Sheet: /BQ7****_low/Battery_pack/Battery12-13/		
File: Batt_ball.sch		
Title:		
Size: A4	Date:	**Rev:**
KiCad E.D.A. kicad (after 2015-may-25 BZR unknown)-product		Id: 95/101

Sheet for battery cell

Put anything about possible battery in this sheet as component
description or should I say new field.

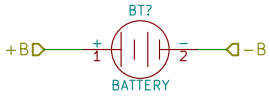

FESB

Sheet: /BQ7****_low/Battery_pack/Battery12-13/Battery cell/
File: Batt.sch

Title:

Size: A4	Date:	**Rev:**
KiCad E.D.A. kicad (after 2015-may-25 BZR unknown)-product		Id: 96/101

This is just mesurment and balancing circuit

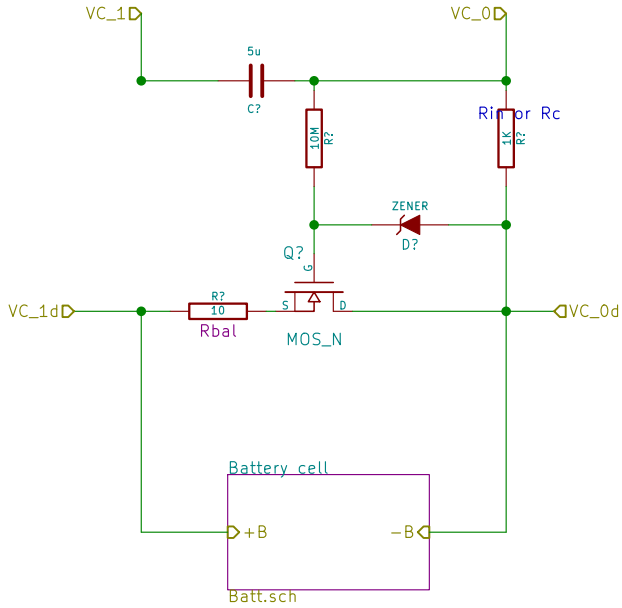

FESB		
Sheet: /BQ7****_low/Battery_pack/BatteryVC13-14/		
File: Batt_ball.sch		
Title:		
Size: A4	Date:	**Rev:**
KiCad E.D.A. kicad (after 2015-may-25 BZR unknown)-product		Id: 97/101

Sheet for battery cell

Put anything about possible battery in this sheet as component
description or should I say new field.

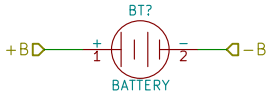

FESB

Sheet: /BQ7****_low/Battery_pack/BatteryVC13-14/Battery cell/
File: Batt.sch

Title:

Size: A4	Date:	**Rev:**
KiCad E.D.A. kicad (after 2015-may-25 BZR unknown)-product		Id: 98/101

This is just mesurment and balancing circuit

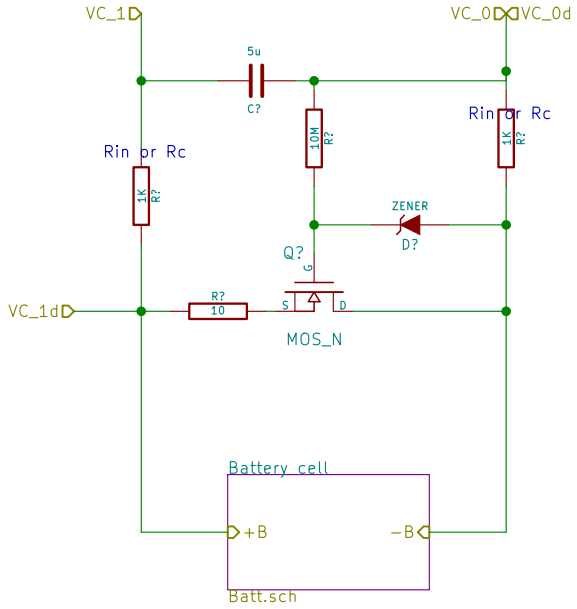

FESB		
Sheet: /BQ7****_low/Battery_pack/BattertyVC14-15/		
File: Batt_ball_end.sch		
Title:		
Size: A4	Date:	**Rev:**
KiCad E.D.A. kicad (after 2015-may-25 BZR unknown)-product		Id: 99/101

Sheet for battery cell

Put anything about possible battery in this sheet as component
description or should I say new field.

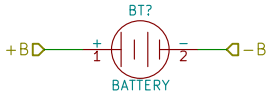

FESB

Sheet: /BQ7****_low/Battery_pack/BattertyVC14-15/Battery cell/
File: Batt.sch

Title:

Size: A4	Date:	**Rev:**
KiCad E.D.A. kicad (after 2015-may-25 BZR unknown)-product		Id: 100/101

Data pins

ON/OFF

FAULT

Icont

Vcont

RESET

FAULTSTOP

DC/DC convert characteristics
in:100V ?? ;
out: 120-80V 30-5A(max out current can be lower)

Vin

GNDin

Vout

GNDout

FESB

Sheet: /DC/DC converter/
File: DCDC.sch

Title:

Size: A4	Date:	Rev:
KiCad E.D.A. kicad (after 2015-may-25 BZR unknown)-product		Id: 101/101