BLDC motor controller

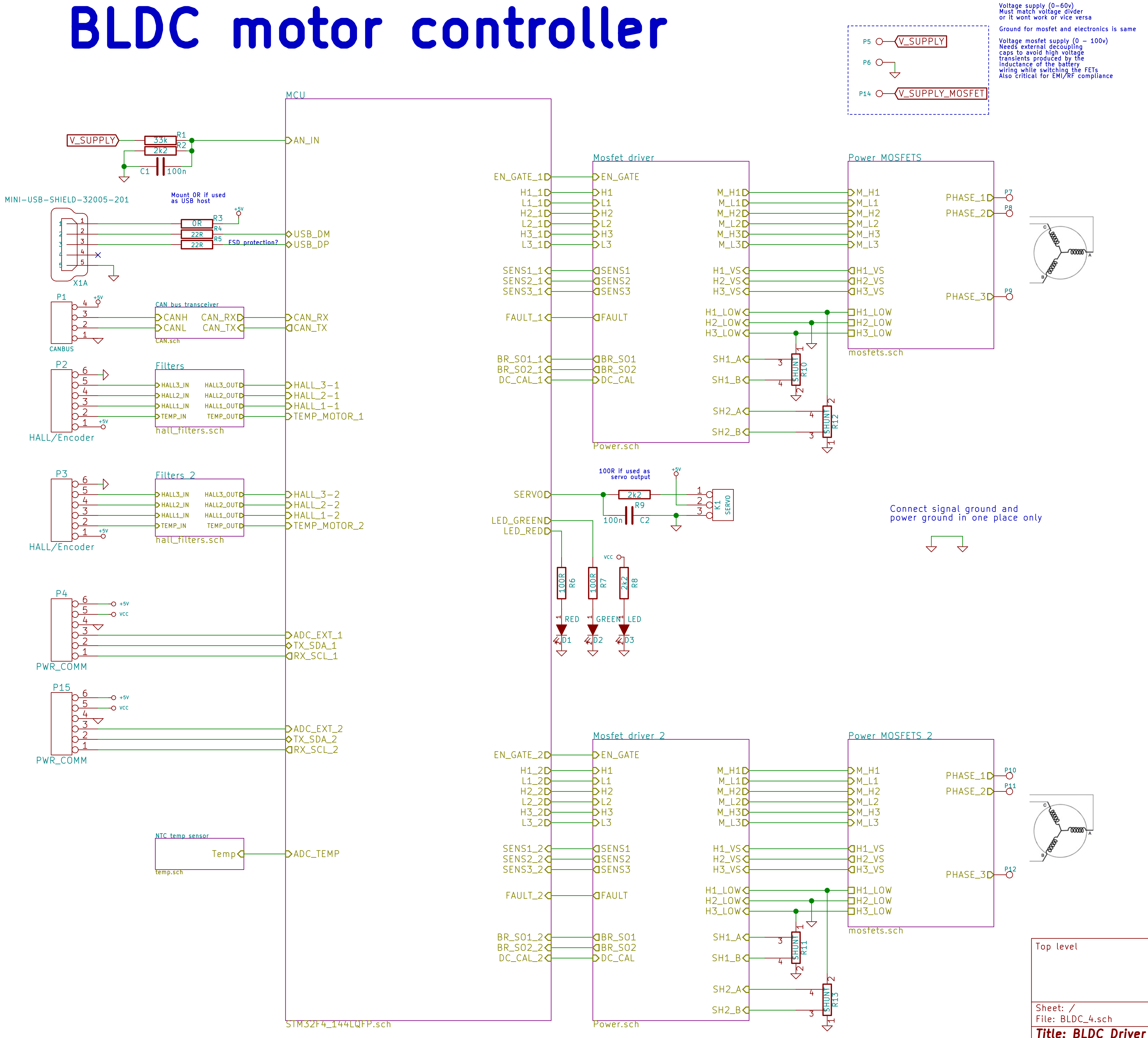
MCU
STM32F4_144LQFP.sch
V_SUPPLY
R1 33k
R2 2k2
C1 100n
AN_IN
MINI-USB-SHIELD-32005-201
X1A
R3 0R
R4 22R
R5 22R
+5V
USB_DM
USB_DP
P1
CANBUS
CAN bus transceiver
CANH
CANL
CAN_RX
CAN_TX
CAN.sch
P2
HALL/Encoder
Filters
HALL3_IN
HALL2_IN
HALL1_IN
TEMP_IN
HALL3_OUT
HALL2_OUT
HALL1_OUT
TEMP_OUT
hall_filters.sch
HALL_3-1
HALL_2-1
HALL_1-1
TEMP_MOTOR_1
P3
HALL/Encoder
Filters 2
hall_filters.sch
HALL_3-2
HALL_2-2
HALL_1-2
TEMP_MOTOR_2
P4
PWR_COMM
VCC
ADC_EXT_1
TX_SDA_1
RX_SCL_1
P15
PWR_COMM
ADC_EXT_2
TX_SDA_2
RX_SCL_2
NTC temp sensor
Temp
temp.sch
ADC_TEMP
EN_GATE_1
H1_1
L1_1
H2_1
L2_1
H3_1
L3_1
SENS1_1
SENS2_1
SENS3_1
FAULT_1
BR_SO1_1
BR_SO2_1
DC_CAL_1
Mosfet driver
Power.sch
EN_GATE
H1
L1
H2
L2
H3
L3
SENS1
SENS2
SENS3
FAULT
BR_SO1
BR_SO2
DC_CAL
M_H1
M_L1
M_H2
M_L2
M_H3
M_L3
H1_VS
H2_VS
H3_VS
H1_LOW
H2_LOW
H3_LOW
SH1_A
SH1_B
SH2_A
SH2_B
SHUNT R10
SHUNT R12
Power MOSFETS
mosfets.sch
PHASE_1
PHASE_2
PHASE_3
P7
P8
P9
P5
P6
P14
V_SUPPLY_MOSFET
SERVO
LED_GREEN
LED_RED
R9 2k2
C2 100n
K1 SERVO
R6 100R
R7 100R
R8 2k2
RED
GREEN
LED
D1
D2
D3
EN_GATE_2
H1_2
L1_2
H2_2
L2_2
H3_2
L3_2
SENS1_2
SENS2_2
SENS3_2
FAULT_2
BR_SO1_2
BR_SO2_2
DC_CAL_2
Mosfet driver 2
Power MOSFETS 2
SHUNT R11
SHUNT R13
P10
P11
P12

Voltage supply (0–60v)
Must match voltage divder
or it wont work or vice versa

Ground for mosfet and electronics is same

Voltage mosfet supply (0 – 100v)
Needs external decoupling
caps to avoid high voltage
transients produced by the
inductance of the battery
wiring while switching the FETs
Also critical for EMI/RF compliance

Mount 0R if used
as USB host

ESD protection?

100R if used as
servo output

Connect signal ground and
power ground in one place only

Top level

Sheet: /
File: BLDC_4.sch

Title: BLDC Driver 4.6

Size: A3
Date: 6 feb 2015
Rev: 1.0
KiCad E.D.A. kicad (2015-02-11 BZR 5414)-product
Id: 1/28

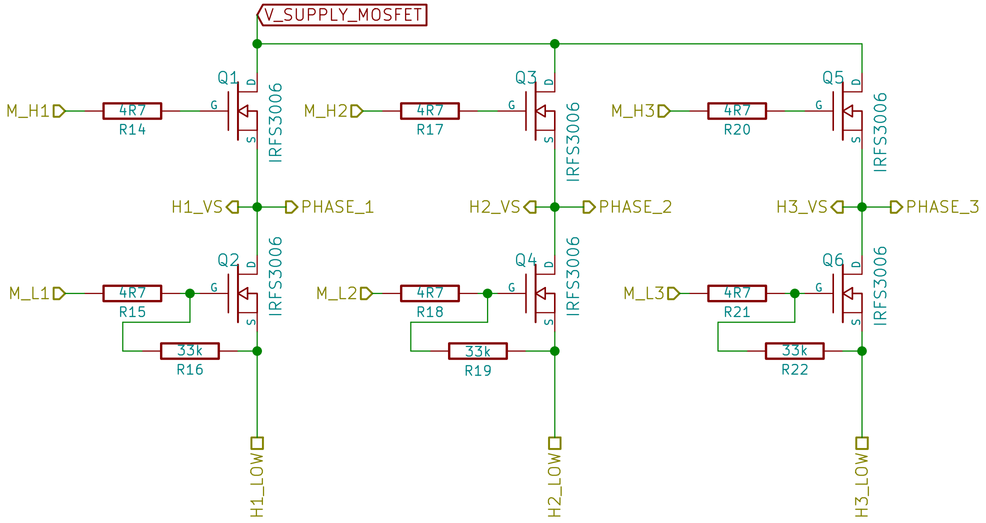
V_SUPPLY_MOSFET
Q1
Q3
Q5
IRFS3006
M_H1
M_H2
M_H3
4R7
R14
R17
R20
G
D
S
H1_VS
PHASE_1
H2_VS
PHASE_2
H3_VS
PHASE_3
Q2
Q4
Q6
M_L1
M_L2
M_L3
R15
R18
R21
33k
R16
R19
R22
H1_LOW
H2_LOW
H3_LOW

Sheet: /Power MOSFETS/
File: mosfets.sch

Title: BLDC Driver 4.6

Size: A4 Date: 6 feb 2015 **Rev: 1.0**
KiCad E.D.A. kicad (2015-02-11 BZR 5414)-product Id: 2/28

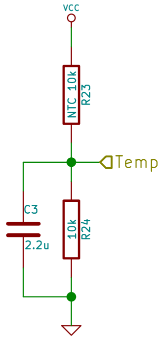
VCC
NTC 10k
R23
Temp
C3
2.2u
10k
R24

Sheet: /NTC temp sensor/
File: temp.sch

Title: NTC resistor temperature sensor

Size: A4 Date: 6 feb 2015 **Rev: 1.0**
KiCad E.D.A. kicad (2015-02-11 BZR 5414)-product Id: 3/28

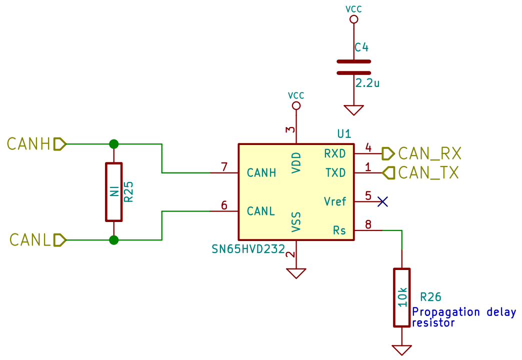
VCC
C4
2.2u
VCC
3
U1
CANH
4
RXD
CAN_RX
7
CANH
VDD
1
TXD
CAN_TX
NI
R25
Vref
5
6
CANL
VSS
8
Rs
CANL
SN65HVD232
2
10k
R26
Propagation delay resistor

Package Types

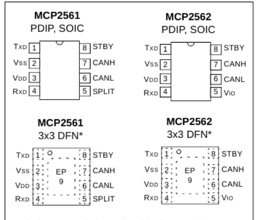
MCP2561
PDIP, SOIC
MCP2562
PDIP, SOIC
TXD 1
VSS 2
VDD 3
RXD 4
8 STBY
7 CANH
6 CANL
5 SPLIT
5 VIO
MCP2561
3x3 DFN*
MCP2562
3x3 DFN*
EP
9

* Includes Exposed Thermal Pad (EP); see Table 1-2.

Sheet: /CAN bus transceiver/
File: CAN.sch

Title: CAN BUS transceiver

Size: A4 Date: 6 feb 2015 **Rev: 1.0**
KiCad E.D.A. kicad (2015-02-11 BZR 5414)-product Id: 4/28

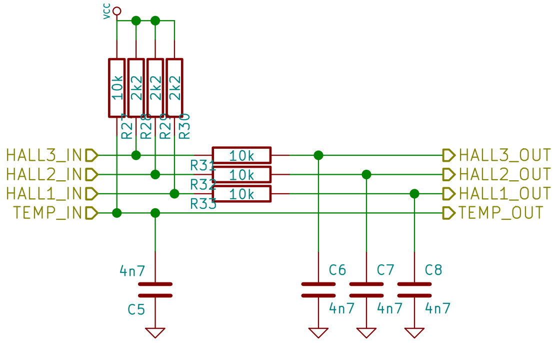
VCC
10k
2k2
2k2
2k2
R27
R28
R29
R30
HALL3_IN
HALL2_IN
HALL1_IN
TEMP_IN
10k
R31
10k
R32
10k
R33
HALL3_OUT
HALL2_OUT
HALL1_OUT
TEMP_OUT
4n7
C5
C6
4n7
C7
4n7
C8
4n7

Sheet: /Filters/
File: hall_filters.sch

Title:

Size: A4
Date: 6 feb 2015
Rev: 1.0
KiCad E.D.A. kicad (2015-02-11 BZR 5414)-product
Id: 5/28

FEATURES

- Operating Supply Voltage 8V–60V
- 2.3A Sink and 1.7A Source Gate Drive Current Capability
- Integrated Dual Shunt Current Amplifiers With Adjustable Gain and Offset
- Integrated Buck Converter to Support up to 1.5A External Load
- Independent Control of 3 or 6 PWM Inputs
- Bootstrap Gate Driver With 100% Duty Cycle Support
- Programmable Dead Time to Protect External FETs from Shoot Through
- Programmable Overcurrent Protection of External MOSFETs
- Thermally Enhanced 56-Pin TSSOP Pad Down DCA Package

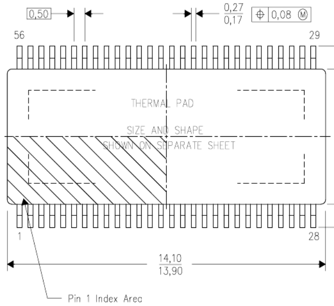
0,50
0,27
0,17
⊕ 0,08 Ⓜ
56
29
THERMAL PAD
SIZE AND SHAPE
SHOWN ON SEPARATE SHEET
6,20
6,00
8,30
7,90
1
28
14,10
13,90
Pin 1 Index Area

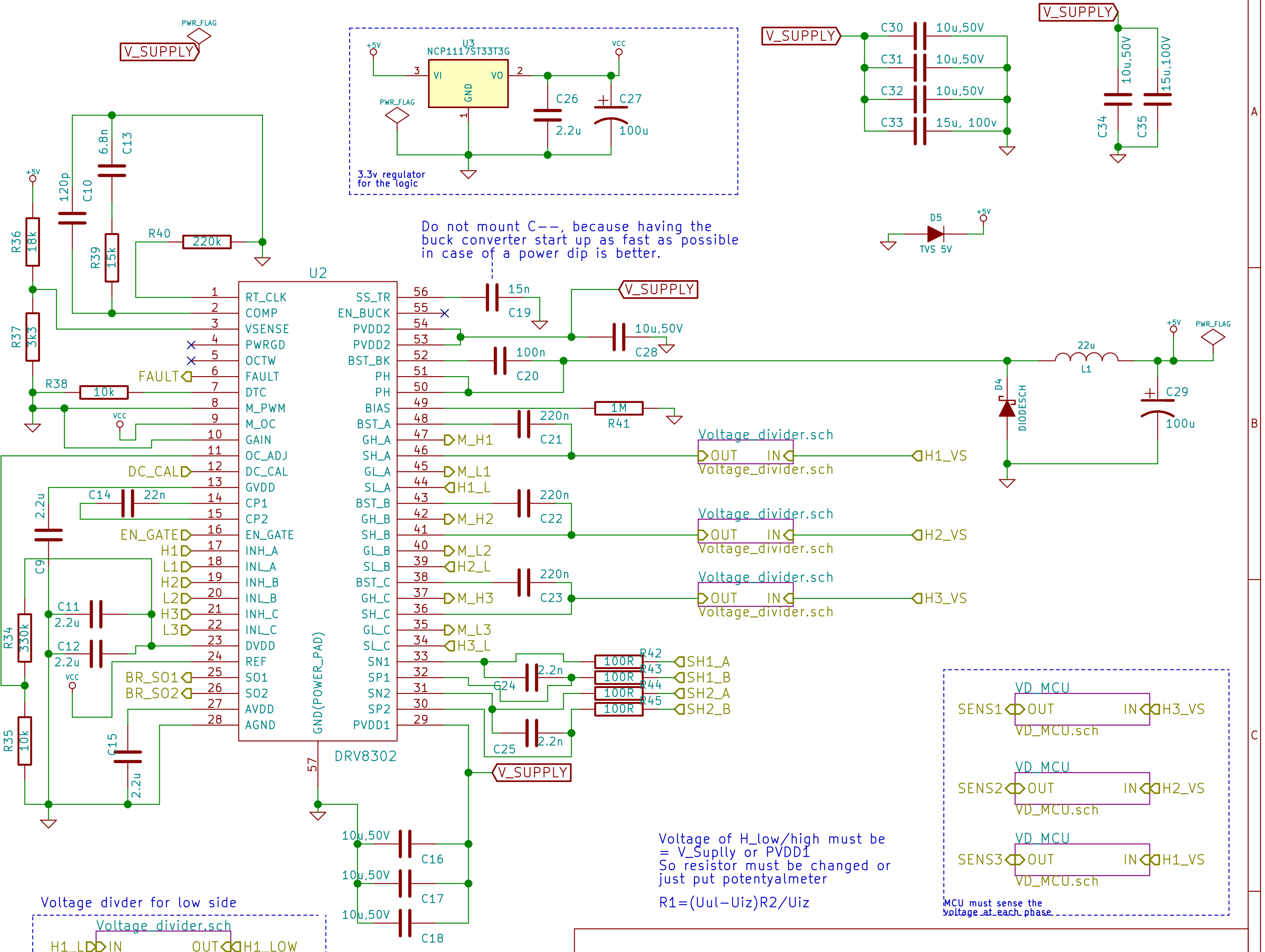
PWR_FLAG
V_SUPPLY
+5V
R36
18k
R37
3k3
R38
10k
120p
C10
6.8n
C13
R39
15k
R40
220k
U2
1 RT_CLK
2 COMP
3 VSENSE
4 PWRGD
5 OCTW
6 FAULT
7 DTC
8 M_PWM
9 M_OC
10 GAIN
11 OC_ADJ
12 DC_CAL
13 GVDD
14 CP1
15 CP2
16 EN_GATE
17 INH_A
18 INL_A
19 INH_B
20 INL_B
21 INH_C
22 INL_C
23 DVDD
24 REF
25 SO1
26 SO2
27 AVDD
28 AGND
56 SS_TR
55 EN_BUCK
54 PVDD2
53 PVDD2
52 BST_BK
51 PH
50 PH
49 BIAS
48 BST_A
47 GH_A
46 SH_A
45 GL_A
44 SL_A
43 BST_B
42 GH_B
41 SH_B
40 GL_B
39 SL_B
38 BST_C
37 GH_C
36 SH_C
35 GL_C
34 SL_C
33 SN1
32 SP1
31 SN2
30 SP2
29 PVDD1
GND(POWER_PAD)
57
DRV8302
FAULT
DC_CAL
EN_GATE
H1
L1
H2
L2
H3
L3
BR_SO1
BR_SO2
VCC
C14
22n
2.2u
C9
C11
2.2u
C12
2.2u
R34
330k
R35
10k
C15
2.2u
15n
C19
10u,50V
C28
100n
C20
220n
C21
R41
1M
220n
C22
220n
C23
M_H1
M_L1
H1_L
M_H2
M_L2
H2_L
M_H3
M_L3
H3_L
Voltage_divider.sch
OUT
IN
H1_VS
H2_VS
H3_VS
R42
R43
R44
R45
100R
SH1_A
SH1_B
SH2_A
SH2_B
C24
2.2n
C25
2.2n
10u,50V
C16
C17
C18
U3
NCP1117ST33T3G
VI
VO
GND
3
2
1
C26
2.2u
C27
100u
C30
C31
C32
C33
10u,50V
15u, 100v
C34
10u,50V
C35
15u,100V
D5
TVS 5V
D4
DIODESCH
22u
L1
C29
100u
VD_MCU
SENS1
SENS2
SENS3
VD_MCU.sch

3.3v regulator for the logic

Do not mount C−−, because having the buck converter start up as fast as possible in case of a power dip is better.

Voltage of H_low/high must be = V_Suplly or PVDD1
So resistor must be changed or just put potentyalmeter

R1=(Uul−Uiz)R2/Uiz

MCU must sense the voltage at each phase

Do not mount the resistor R−−, because the internal current limit in the DRV8302 does not work with this configuration for some reason. If this resistor is mounted, the DRV8203 will generate faults all the time.

Voltage divder for low side

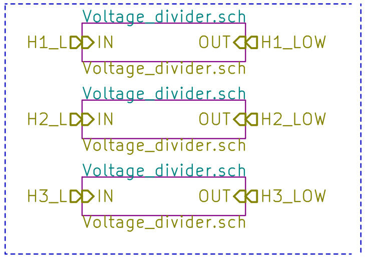
Voltage_divider.sch
H1_L
IN
OUT
H1_LOW
H2_L
H2_LOW
H3_L
H3_LOW

RECOMMENDED OPERATING CONDITIONS

			MIN	TYP	MAX	UNITS
PVDD1	DC supply voltage PVDD1 for normal operation	Relative to PGND	8		60	V
PVDD2	DC supply voltage PVDD2 for buck converter		3.5		60	V
C_{AVDD}	External capacitance on AVDD pin (ceramic cap) 20% tolerance			1		µF
C_{DVDD}	External capacitance on DVDD pin (ceramic cap) 20% tolerance			1		µF
C_{GVDD}	External capacitance on GVDD pin (ceramic cap) 20% tolerance			2.2		µF
C_{CP}	Flying cap on charge pump pins (between CP1 and CP2) (ceramic cap) 20% tolerance			22		nF
C_{BST}	Bootstrap cap (ceramic cap)			100		nF
I_{DIN_EN}	Input current of digital pins when EN_GATE is high				100	µA
I_{DIN_DIS}	Input current of digital pins when EN_GATE is low				1	µA
C_{DIN}	Maximum capacitance on digital input pin				10	pF
C_{O_OPA}	Maximum output capacitance on outputs of shunt amplifier				20	pF
R_{DTC}	Dead time control resistor range. Time range is 50ns (-GND) to 500ns (150kΩ) with a linear approximation.		0		150	kΩ
I_{FAULT}	$\overline{\text{FAULT}}$ pin sink current. Open-drain	V = 0.4 V			2	mA
I_{OCTW}	$\overline{\text{OCTW}}$ pin sink current. Open-drain	V = 0.4 V			2	mA
V_{REF}	External voltage reference voltage for current shunt amplifiers		2		6	V
f_{gate}	Operating switching frequency of gate driver	Qg(TOT) = 25 nC or total 30 mA gate drive average current			200	kHz
T_A	Ambient temperature		–40		125	°C

Sheet: /Mosfet driver/
File: Power.sch

Title: BLDC Driver 4.5

Size: A4 Date: 6 feb 2015 **Rev: 1.0**
KiCad E.D.A. kicad (2015-02-11 BZR 5414)-product Id: 6/28

CALCULATION

R2=22k
Uiz=50V
Uul=100V

R1=(100V-50V)*22k/50V
R1=R2=22k

R1=(Uul-Uiz)R2/Uiz

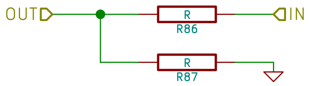

Calculate R2 from a Imax and Umax or if you know Imin for chip that is
sensing this voltage calculate by that path.

Sheet: /Mosfet driver/Voltage_divider.sch/
File: Voltage_divider.sch

Title:

Size: A4
Date:
Rev:
KiCad E.D.A. kicad (2015-02-11 BZR 5414)-product
Id: 7/28

CALCULATION

R2=22k
Uiz=50V
Uul=100V

R1=(100V−50V)*22k/50V
R1=R2=22k

R1=(Uul−Uiz)R2/Uiz

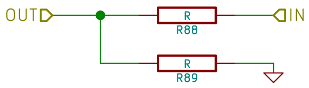

Calculate R2 from a Imax and Umax or if you know Imin for chip that is
sensing this voltage calculate by that path.

Sheet: /Mosfet driver/Voltage_divider.sch/
File: Voltage_divider.sch

Title:

Size: A4 Date:
KiCad E.D.A. kicad (2015-02-11 BZR 5414)-product

Rev:
Id: 8/28

CALCULATION

R2=22k
Uiz=50V
Uul=100V

R1=(100V-50V)*22k/50V
R1=R2=22k

R1=(Uul-Uiz)R2/Uiz

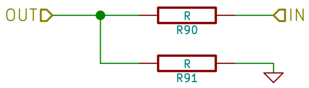

Calculate R2 from a Imax and Umax or if you know Imin for chip that is
sensing this voltage calculate by that path.

Sheet: /Mosfet driver/Voltage_divider.sch/
File: Voltage_divider.sch

Title:

Size: A4 | Date: | **Rev:**
KiCad E.D.A. kicad (2015-02-11 BZR 5414)-product | Id: 9/28

R1=(Uul-Uiz)R2/Uiz

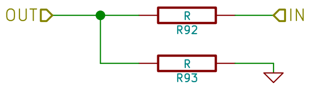

Calculate R2 from a Imax and Umax or if you know Imin for chip that is
sensing this voltage calculate by that path.

CALCULATION

R2=22k
Uiz=50V
Uul=100V

R1=(100V-50V)*22k/50V
R1=R2=22k

Sheet: /Mosfet driver/Voltage_divider.sch/
File: Voltage_divider.sch

Title:

Size: A4
Date:
Rev:
KiCad E.D.A. kicad (2015-02-11 BZR 5414)-product
Id: 10/28

CALCULATION

R2=22k
Uiz=50V
Uul=100V

R1=(100V−50V)*22k/50V
R1=R2=22k

R1=(Uul−Uiz)R2/Uiz

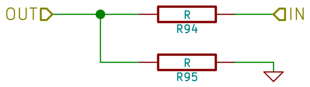

Calculate R2 from a Imax and Umax or if you know Imin for chip that is sensing this voltage calculate by that path.

Sheet: /Mosfet driver/Voltage_divider.sch/
File: Voltage_divider.sch

Title:

Size: A4	Date:	**Rev:**
KiCad E.D.A. kicad (2015−02−11 BZR 5414)−product		Id: 11/28

CALCULATION

R2=22k
Uiz=50V
Uul=100V
- - - - - - - - - - - - - -

R1=(100V−50V)*22k/50V
R1=R2=22k

R1=(Uul−Uiz)R2/Uiz

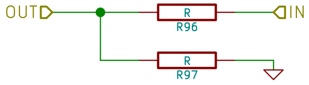

Calculate R2 from a Imax and Umax or if you know Imin for chip that is
sensing this voltage calculate by that path.

Sheet: /Mosfet driver/Voltage_divider.sch/
File: Voltage_divider.sch

Title:

Size: A4 Date:
KiCad E.D.A. kicad (2015−02−11 BZR 5414)−product

Rev:
Id: 12/28

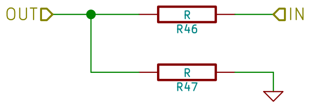

Voltage divider for MCU, equtions same as for Volatage_divider.
For Uul=100V, Uiz=4.78V5V and R2=2.9k
R1=58k

Sheet: /Mosfet driver/VD_MCU/
File: VD_MCU.sch

Title:

Size: A4
Date:
Rev:
KiCad E.D.A. kicad (2015-02-11 BZR 5414)-product
Id: 13/28

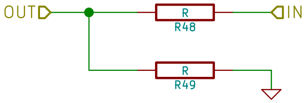

Voltage divider for MCU, equtions same as for Volatage_divider.
For Uul=100V, Uiz=4.78V5V and R2=2.9k
R1=58k

Sheet: /Mosfet driver/VD_MCU/
File: VD_MCU.sch

Title:

Size: A4	Date:	**Rev:**
KiCad E.D.A. kicad (2015-02-11 BZR 5414)-product		Id: 14/28

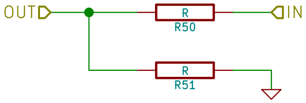

Voltage divider for MCU, equtions same as for Volatage_divider.
For Uul=100V, Uiz=4.78V5V and R2=2.9k
R1=58k

Sheet: /Mosfet driver/VD_MCU/
File: VD_MCU.sch

Title:

Size: A4 Date: **Rev:**
KiCad E.D.A. kicad (2015-02-11 BZR 5414)-product Id: 15/28

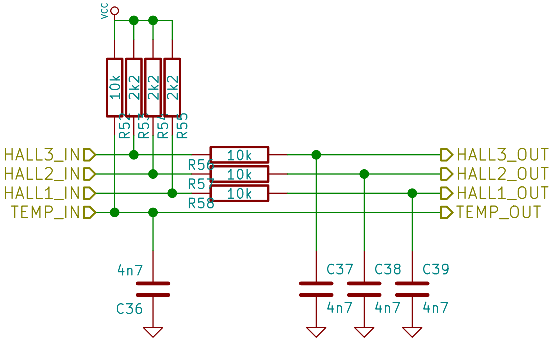
VCC
10k
2k2
2k2
2k2
R52
R53
R54
R55
HALL3_IN
HALL2_IN
HALL1_IN
TEMP_IN
10k
R56
10k
R57
10k
R58
HALL3_OUT
HALL2_OUT
HALL1_OUT
TEMP_OUT
4n7
C36
C37
C38
C39
4n7
4n7
4n7

Sheet: /Filters_2/
File: hall_filters.sch

Title:

Size: A4	Date: 6 feb 2015	**Rev: 1.0**
KiCad E.D.A. kicad (2015-02-11 BZR 5414)-product		Id: 16/28

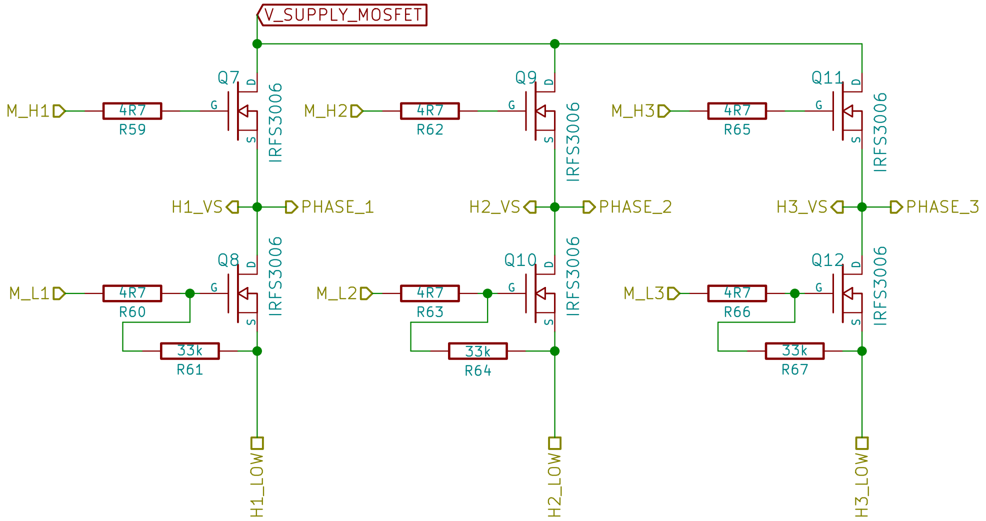
V_SUPPLY_MOSFET
Q7
IRFS3006
Q9
IRFS3006
Q11
IRFS3006
M_H1
4R7
R59
M_H2
4R7
R62
M_H3
4R7
R65
G
D
S
H1_VS
PHASE_1
H2_VS
PHASE_2
H3_VS
PHASE_3
Q8
IRFS3006
Q10
IRFS3006
Q12
IRFS3006
M_L1
4R7
R60
M_L2
4R7
R63
M_L3
4R7
R66
33k
R61
33k
R64
33k
R67
H1_LOW
H2_LOW
H3_LOW

Sheet: /Power MOSFETS_2/
File: mosfets.sch

Title: BLDC Driver 4.6

Size: A4	Date: 6 feb 2015	**Rev: 1.0**
KiCad E.D.A. kicad (2015-02-11 BZR 5414)-product		Id: 17/28

FEATURES

- Operating Supply Voltage 8V–60V
- 2.3A Sink and 1.7A Source Gate Drive Current Capability
- Integrated Dual Shunt Current Amplifiers With Adjustable Gain and Offset
- Integrated Buck Converter to Support up to 1.5A External Load
- Independent Control of 3 or 6 PWM Inputs
- Bootstrap Gate Driver With 100% Duty Cycle Support
- Programmable Dead Time to Protect External FETs from Shoot Through
- Programmable Overcurrent Protection of External MOSFETs
- Thermally Enhanced 56-Pin TSSOP Pad Down DCA Package

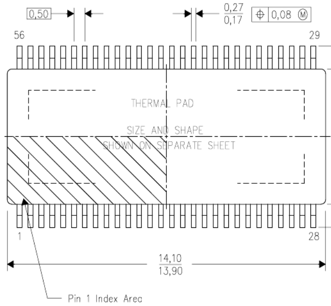
0,50
0,27
0,17
⊕ 0,08 Ⓜ
56
29
THERMAL PAD
SIZE AND SHAPE
SHOWN ON SEPARATE SHEET
6,20
6,00
8,30
7,90
1
28
14,10
13,90
Pin 1 Index Area

RECOMMENDED OPERATING CONDITIONS

			MIN	TYP	MAX	UNITS
PVDD1	DC supply voltage PVDD1 for normal operation	Relative to PGND	8		60	V
PVDD2	DC supply voltage PVDD2 for buck converter		3.5		60	V
C_{AVDD}	External capacitance on AVDD pin (ceramic cap) 20% tolerance			1		μF
C_{DVDD}	External capacitance on DVDD pin (ceramic cap) 20% tolerance			1		μF
C_{GVDD}	External capacitance on GVDD pin (ceramic cap) 20% tolerance			2.2		μF
C_{CP}	Flying cap on charge pump pins (between CP1 and CP2) (ceramic cap) 20% tolerance			22		nF
C_{BST}	Bootstrap cap (ceramic cap)			100		nF
I_{DIN_EN}	Input current of digital pins when EN_GATE is high				100	μA
I_{DIN_DIS}	Input current of digital pins when EN_GATE is low				1	μA
C_{DIN}	Maximum capacitance on digital input pin				10	pF
C_{O_OPA}	Maximum output capacitance on outputs of shunt amplifier				20	pF
R_{DTC}	Dead time control resistor range. Time range is 50ns (-GND) to 500ns (150kΩ) with a linear approximation.		0		150	kΩ
I_{FAULT}	$\overline{FAULT}$ pin sink current. Open-drain	V = 0.4 V			2	mA
I_{OCTW}	$\overline{OCTW}$ pin sink current. Open-drain	V = 0.4 V			2	mA
V_{REF}	External voltage reference voltage for current shunt amplifiers		2		6	V
f_{gate}	Operating switching frequency of gate driver	Qg(TOT) = 25 nC or total 30 mA gate drive average current			200	kHz
T_A	Ambient temperature		–40		125	°C

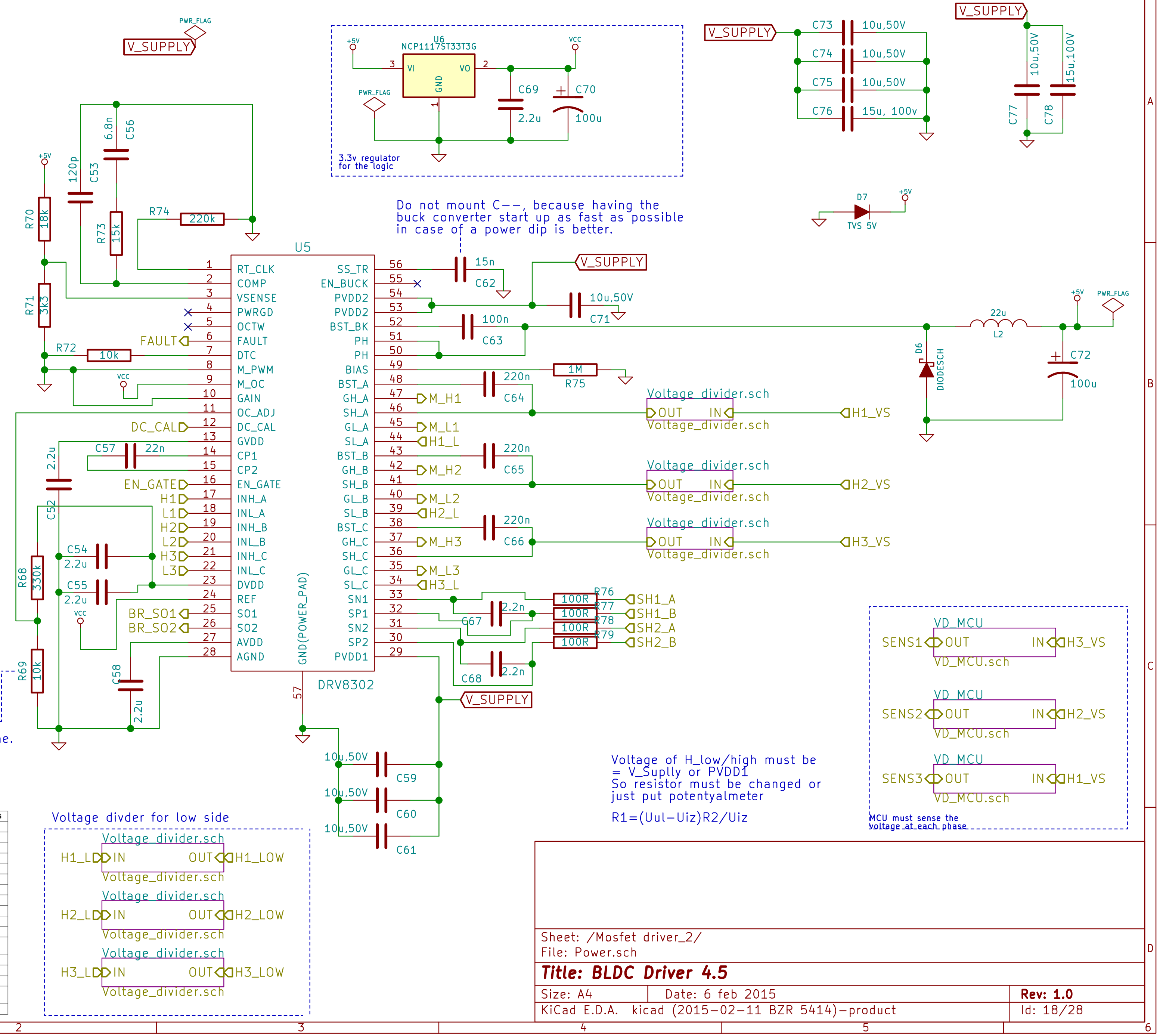
PWR_FLAG
V_SUPPLY
+5V
R70
18k
120p
C53
6.8n
C56
R73
15k
R74
220k
R71
3k3
R72
10k
FAULT
VCC
DC_CAL
2.2u
C52
C57
22n
EN_GATE
H1
L1
H2
L2
H3
L3
C54
2.2u
C55
2.2u
R68
330k
R69
10k
BR_SO1
BR_SO2
C58
2.2u
U5
DRV8302
1 RT_CLK
2 COMP
3 VSENSE
4 PWRGD
5 OCTW
6 FAULT
7 DTC
8 M_PWM
9 M_OC
10 GAIN
11 OC_ADJ
12 DC_CAL
13 GVDD
14 CP1
15 CP2
16 EN_GATE
17 INH_A
18 INL_A
19 INH_B
20 INL_B
21 INH_C
22 INL_C
23 DVDD
24 REF
25 SO1
26 SO2
27 AVDD
28 AGND
56 SS_TR
55 EN_BUCK
54 PVDD2
53 PVDD2
52 BST_BK
51 PH
50 PH
49 BIAS
48 BST_A
47 GH_A
46 SH_A
45 GL_A
44 SL_A
43 BST_B
42 GH_B
41 SH_B
40 GL_B
39 SL_B
38 BST_C
37 GH_C
36 SH_C
35 GL_C
34 SL_C
33 SN1
32 SP1
31 SN2
30 SP2
29 PVDD1
57 GND(POWER_PAD)
15n
C62
10u,50V
C71
100n
C63
1M
R75
220n
C64
M_H1
M_L1
H1_L
220n
C65
M_H2
M_L2
H2_L
220n
C66
M_H3
M_L3
H3_L
2.2n
C67
2.2n
C68
100R
R76
R77
R78
R79
SH1_A
SH1_B
SH2_A
SH2_B
10u,50V
C59
C60
C61
U6
NCP1117ST33T3G
VI
VO
GND
C69
2.2u
C70
100u
3.3v regulator for the logic
C73
C74
C75
C76
10u,50V
15u, 100v
C77
C78
15u,100V
D7
TVS 5V
22u
L2
D6
DIODESCH
C72
100u
Voltage_divider.sch
OUT
IN
H1_VS
H2_VS
H3_VS
VD_MCU
SENS1
SENS2
SENS3
VD_MCU.sch
Voltage divder for low side
H1_L
H2_L
H3_L
H1_LOW
H2_LOW
H3_LOW

Do not mount C−−, because having the buck converter start up as fast as possible in case of a power dip is better.

Do not mount the resistor R−−, because the internal current limit in the DRV8302 does not work with this configuration for some reason. If this resistor is mounted, the DRV8203 will generate faults all the time.

Voltage of H_low/high must be = V_Suplly or PVDD1
So resistor must be changed or just put potentyalmeter

R1=(Uul−Uiz)R2/Uiz

MCU must sense the voltage at each phase

Sheet: /Mosfet driver_2/
File: Power.sch

Title: BLDC Driver 4.5

Size: A4
Date: 6 feb 2015
Rev: 1.0
KiCad E.D.A. kicad (2015-02-11 BZR 5414)-product
Id: 18/28

CALCULATION

R2=22k
Uiz=50V
Uul=100V

R1=(100V−50V)*22k/50V
R1=R2=22k

R1=(Uul−Uiz)R2/Uiz

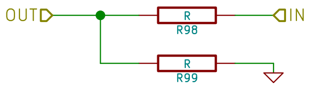

Calculate R2 from a Imax and Umax or if you know Imin for chip that is sensing this voltage calculate by that path.

Sheet: /Mosfet driver_2/Voltage_divider.sch/
File: Voltage_divider.sch

Title:

Size: A4 Date: **Rev:**
KiCad E.D.A. kicad (2015−02−11 BZR 5414)−product Id: 19/28

CALCULATION

R2=22k
Uiz=50V
Uul=100V

R1=(100V−50V)*22k/50V
R1=R2=22k

R1=(Uul−Uiz)R2/Uiz

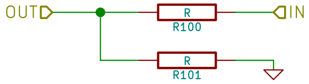

Calculate R2 from a Imax and Umax or if you know Imin for chip that is
sensing this voltage calculate by that path.

Sheet: /Mosfet driver_2/Voltage_divider.sch/
File: Voltage_divider.sch

Title:

Size: A4
Date:
Rev:
KiCad E.D.A. kicad (2015-02-11 BZR 5414)-product
Id: 20/28

CALCULATION

R2=22k
Uiz=50V
Uul=100V

R1=(100V−50V)*22k/50V
R1=R2=22k

R1=(Uul−Uiz)R2/Uiz

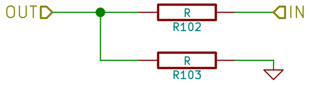

Calculate R2 from a Imax and Umax or if you know Imin for chip that is
sensing this voltage calculate by that path.

Sheet: /Mosfet driver_2/Voltage_divider.sch/
File: Voltage_divider.sch

Title:

Size: A4	Date:	**Rev:**
KiCad E.D.A. kicad (2015-02-11 BZR 5414)-product		Id: 21/28

CALCULATION

R2=22k
Uiz=50V
Uul=100V

R1=(100V−50V)*22k/50V
R1=R2=22k

R1=(Uul−Uiz)R2/Uiz

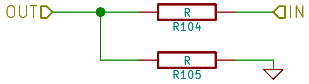

Calculate R2 from a Imax and Umax or if you know Imin for chip that is sensing this voltage calculate by that path.

Sheet: /Mosfet driver_2/Voltage_divider.sch/
File: Voltage_divider.sch

Title:

Size: A4	Date:	**Rev:**
KiCad E.D.A. kicad (2015−02−11 BZR 5414)−product		Id: 22/28

CALCULATION

R2=22k
Uiz=50V
Uul=100V

R1=(100V−50V)*22k/50V
R1=R2=22k

R1=(Uul−Uiz)R2/Uiz

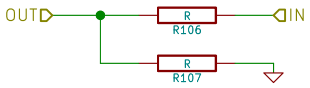

Calculate R2 from a Imax and Umax or if you know Imin for chip that is sensing this voltage calculate by that path.

Sheet: /Mosfet driver_2/Voltage_divider.sch/
File: Voltage_divider.sch

Title:

Size: A4
Date:
Rev:
KiCad E.D.A. kicad (2015−02−11 BZR 5414)−product
Id: 23/28

CALCULATION

R2=22k
Uiz=50V
Uul=100V

R1=(100V−50V)*22k/50V
R1=R2=22k

R1=(Uul−Uiz)R2/Uiz

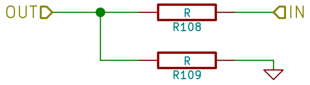

Calculate R2 from a Imax and Umax or if you know Imin for chip that is sensing this voltage calculate by that path.

Sheet: /Mosfet driver_2/Voltage_divider.sch/
File: Voltage_divider.sch

Title:

Size: A4 Date: **Rev:**
KiCad E.D.A. kicad (2015-02-11 BZR 5414)-product Id: 24/28

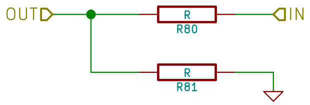

Voltage divider for MCU, equtions same as for Volatage_divider.
For Uul=100V, Uiz=4.78V5V and R2=2.9k
R1=58k

Sheet: /Mosfet driver_2/VD_MCU/
File: VD_MCU.sch

Title:

Size: A4 Date:
KiCad E.D.A. kicad (2015-02-11 BZR 5414)-product

Rev:
Id: 25/28

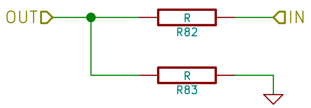

Voltage divider for MCU, equtions same as for Volatage_divider.
For Uul=100V, Uiz=4.78V5V and R2=2.9k
R1=58k

Sheet: /Mosfet driver_2/VD_MCU/
File: VD_MCU.sch

Title:

Size: A4 Date: **Rev:**
KiCad E.D.A. kicad (2015-02-11 BZR 5414)-product Id: 26/28

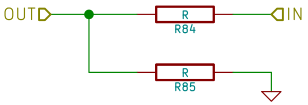

Voltage divider for MCU, equtions same as for Volatage_divider.
For Uul=100V, Uiz=4.78V5V and R2=2.9k
R1=58k

Sheet: /Mosfet driver_2/VD_MCU/
File: VD_MCU.sch

Title:

Size: A4
Date:
Rev:
KiCad E.D.A. kicad (2015-02-11 BZR 5414)-product
Id: 27/28

STM32F405xx
STM32F407xx

ARM Cortex-M4 32b MCU+FPU, 210DMIPS, up to 1MB Flash/192+4KB RAM, USB OTG HS/FS, Ethernet, 17 TIMs, 3 ADCs, 15 comm. interfaces & camera

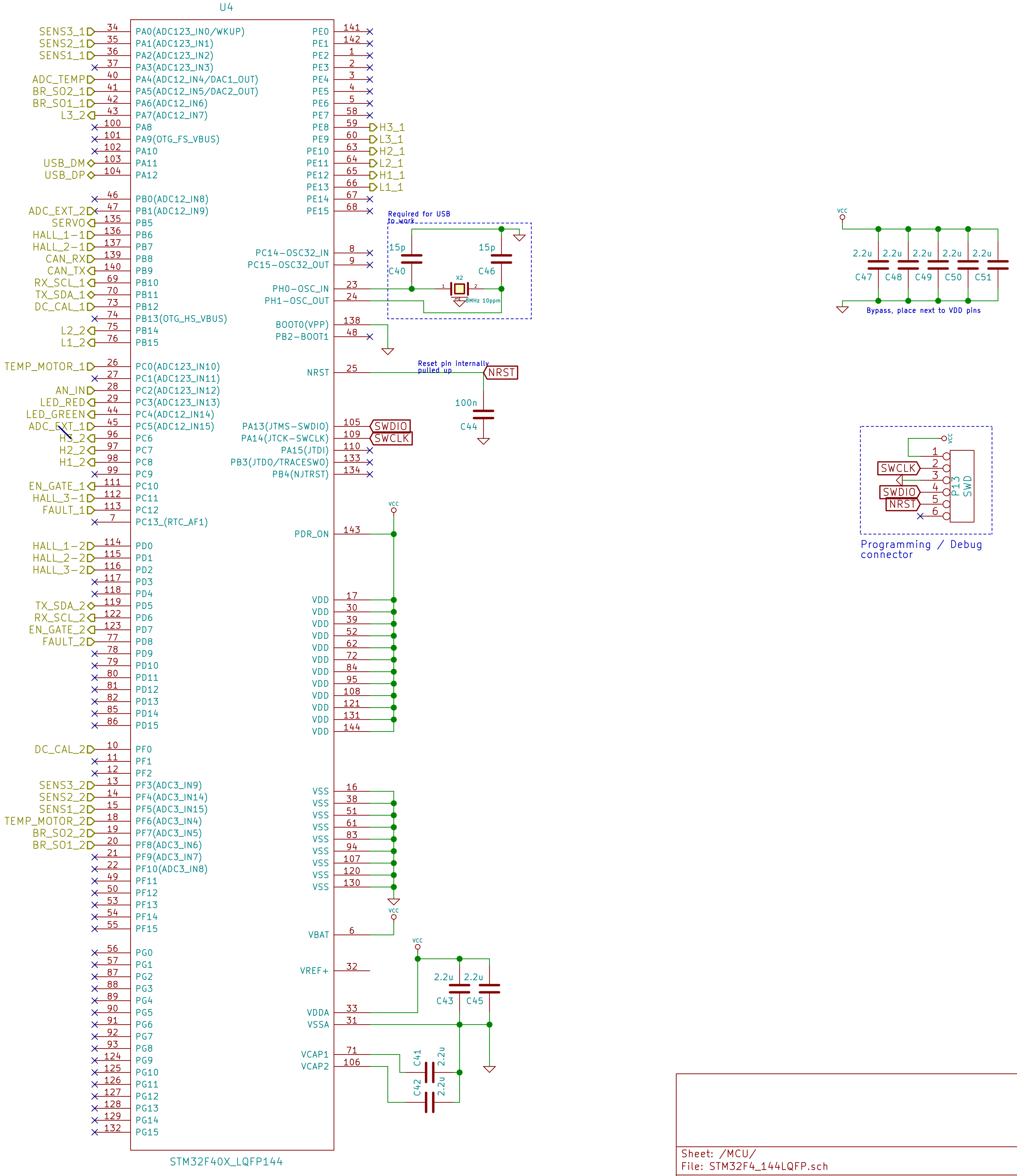
U4
STM32F40X_LQFP144
SENS3_1 34 PA0(ADC123_IN0/WKUP)
SENS2_1 35 PA1(ADC123_IN1)
SENS1_1 36 PA2(ADC123_IN2)
37 PA3(ADC123_IN3)
ADC_TEMP 40 PA4(ADC12_IN4/DAC1_OUT)
BR_SO2_1 41 PA5(ADC12_IN5/DAC2_OUT)
BR_SO1_1 42 PA6(ADC12_IN6)
L3_2 43 PA7(ADC12_IN7)
100 PA8
101 PA9(OTG_FS_VBUS)
102 PA10
USB_DM 103 PA11
USB_DP 104 PA12
46 PB0(ADC12_IN8)
ADC_EXT_2 47 PB1(ADC12_IN9)
SERVO 135 PB5
HALL_1-1 136 PB6
HALL_2-1 137 PB7
CAN_RX 139 PB8
CAN_TX 140 PB9
RX_SCL_1 69 PB10
TX_SDA_1 70 PB11
DC_CAL_1 73 PB12
74 PB13(OTG_HS_VBUS)
L2_2 75 PB14
L1_2 76 PB15
TEMP_MOTOR_1 26 PC0(ADC123_IN10)
27 PC1(ADC123_IN11)
AN_IN 28 PC2(ADC123_IN12)
LED_RED 29 PC3(ADC123_IN13)
LED_GREEN 44 PC4(ADC12_IN14)
ADC_EXT_1 45 PC5(ADC12_IN15)
H3_2 96 PC6
H2_2 97 PC7
H1_2 98 PC8
99 PC9
EN_GATE_1 111 PC10
HALL_3-1 112 PC11
FAULT_1 113 PC12
7 PC13_(RTC_AF1)
HALL_1-2 114 PD0
HALL_2-2 115 PD1
HALL_3-2 116 PD2
117 PD3
118 PD4
TX_SDA_2 119 PD5
RX_SCL_2 122 PD6
EN_GATE_2 123 PD7
FAULT_2 77 PD8
78 PD9
79 PD10
80 PD11
81 PD12
82 PD13
85 PD14
86 PD15
DC_CAL_2 10 PF0
11 PF1
12 PF2
SENS3_2 13 PF3(ADC3_IN9)
SENS2_2 14 PF4(ADC3_IN14)
SENS1_2 15 PF5(ADC3_IN15)
TEMP_MOTOR_2 18 PF6(ADC3_IN4)
BR_SO2_2 19 PF7(ADC3_IN5)
BR_SO1_2 20 PF8(ADC3_IN6)
21 PF9(ADC3_IN7)
22 PF10(ADC3_IN8)
49 PF11
50 PF12
53 PF13
54 PF14
55 PF15
56 PG0
57 PG1
87 PG2
88 PG3
89 PG4
90 PG5
91 PG6
92 PG7
93 PG8
124 PG9
125 PG10
126 PG11
127 PG12
128 PG13
129 PG14
132 PG15
PE0 141
PE1 142
PE2 1
PE3 2
PE4 3
PE5 4
PE6 5
PE7 58
PE8 59 H3_1
PE9 60 L3_1
PE10 63 H2_1
PE11 64 L2_1
PE12 65 H1_1
PE13 66 L1_1
PE14 67
PE15 68
Required for USB to work
PC14-OSC32_IN 8
PC15-OSC32_OUT 9
PH0-OSC_IN 23
PH1-OSC_OUT 24
15p C40
15p C46
X2
1
2
3
8MHz 10ppm
BOOT0(VPP) 138
PB2-BOOT1 48
NRST 25
Reset pin internally pulled up
NRST
100n C44
PA13(JTMS-SWDIO) 105 SWDIO
PA14(JTCK-SWCLK) 109 SWCLK
PA15(JTDI) 110
PB3(JTDO/TRACESWO) 133
PB4(NJTRST) 134
VCC
PDR_ON 143
VDD 17
VDD 30
VDD 39
VDD 52
VDD 62
VDD 72
VDD 84
VDD 95
VDD 108
VDD 121
VDD 131
VDD 144
VSS 16
VSS 38
VSS 51
VSS 61
VSS 83
VSS 94
VSS 107
VSS 120
VSS 130
VCC
VBAT 6
VCC
VREF+ 32
2.2u C43
2.2u C45
VDDA 33
VSSA 31
VCAP1 71
VCAP2 106
C41 2.2u
C42 2.2u
VCC
2.2u C47
2.2u C48
2.2u C49
2.2u C50
2.2u C51
Bypass, place next to VDD pins
VCC
1
2
3
4
5
6
SWCLK
SWDIO
NRST
P13
SWD
Programming / Debug connector

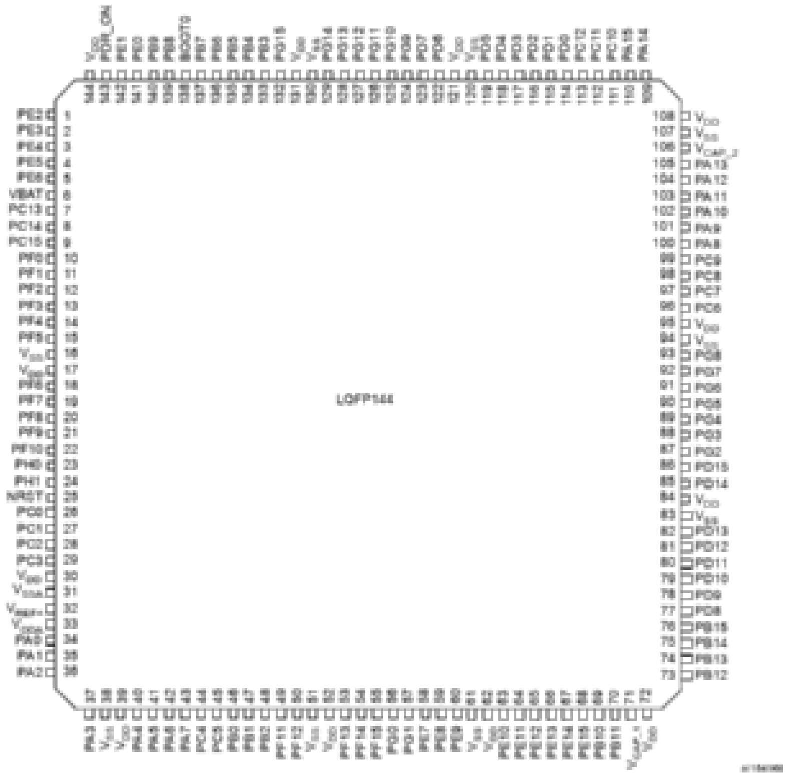

Sheet: /MCU/
File: STM32F4_144LQFP.sch

Title: BLDC Driver 4.6

Size: A3 Date: 6 feb 2015 **Rev: 1.0**
KiCad E.D.A. kicad (2015-02-11 BZR 5414)-product Id: 28/28