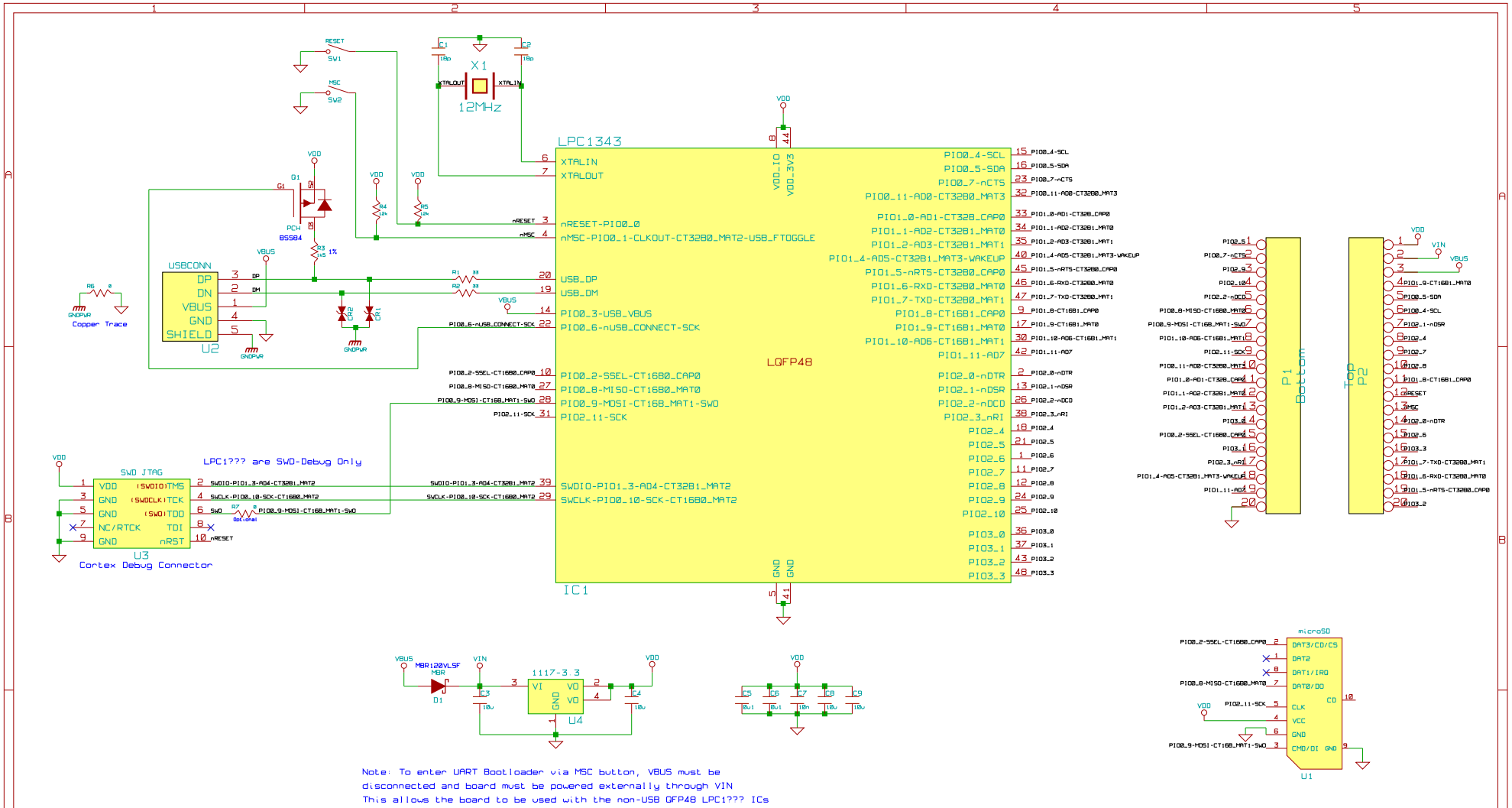

Note: To enter UART Bootloader via MSC button, VBUS must be disconnected and board must be powered externally through VIN
This allows the board to be used with the non-USB QFP48 LPC1??? ICs

www.MicropendousX.org
Copyright Under the Creative Commons Attribution License
http://creativecommons.org/licenses/by/3.0/

Opendous Inc.

File: MicropendousX-1343.sch		
Sheet: /		
Title: MicropendousX-1343		
Size: A4	Date: 2 mar 2010	Rev: 2.0
KiCad E.D.A. EESchema (20080825c)		Id: 1/1