Notes:
- when using the EMC block of the LPC18xx the core clock must be set max 120MHz for compatibility (Errata 20110701 EMC.1)

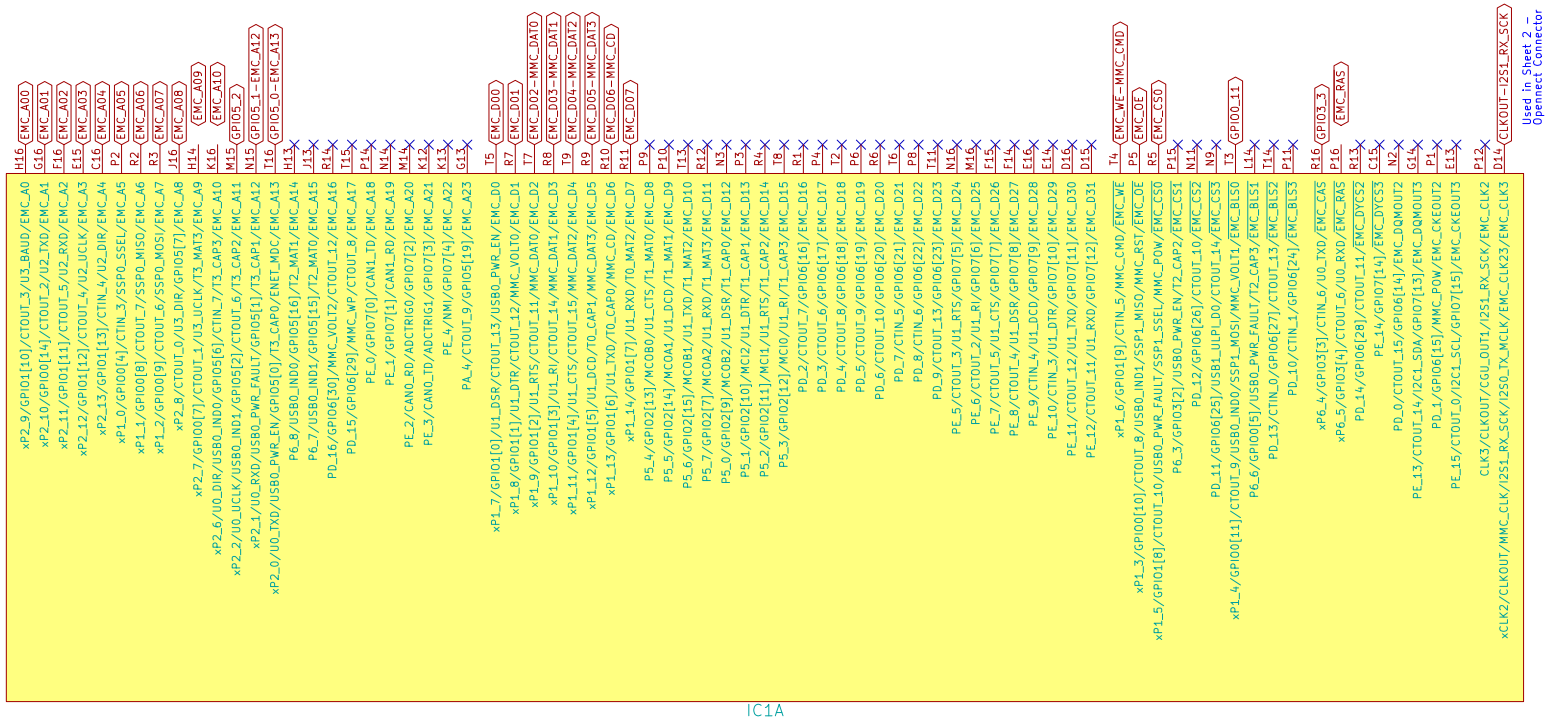

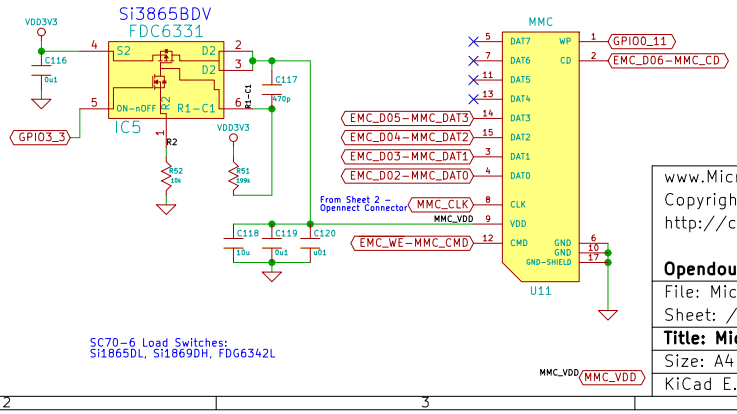

www.MicropendousX.org
Copyright Under the Creative Commons Attribution License
http://creativecommons.org/licenses/by/3.0/

Opendous Inc.

File: MicropendousX-LPC183x-EMI.sch
Sheet: /External Memory Interface/

Title: MicropendousX-LPC183x

Size: A4	**Date: 26 sep 2011**	**Rev: 1.0**
KiCad E.D.A.		Id: 3/7