BioinformHer Mini Project – Module 2

Title: Tracking the Evolution of the Hemoglobin Beta (HBB) Gene across Species

Project Objective: Use the skills learned in Module 2 to investigate the evolutionary conservation of the HBB gene across six species. This includes sequence retrieval, alignment, logo generation, and phylogenetic tree construction.

Task 1: Retrieving sequence and BLAST search on NCBI

Retrieving the human HBB gene protein sequence from NCBI.

1. Visit the NCBI database website https://www.ncbi.nlm.nih.gov/
2. Select Protein from the drop down databases list and search using key words "*HBB human*"
3. Expand the RefSeq Sequences of the HBB-hemoglobin subunit beta as highlighted in the box below and select the accession number on the section "protein"
4. Result will display a full report on the protein documented in GenPept
5. To download the protein sequence in FASTA format, select the option "Send to" at the top right of the page. From the drop down, select complete sequence and destination as file. Select FASTA as the file format and finally click on create file.

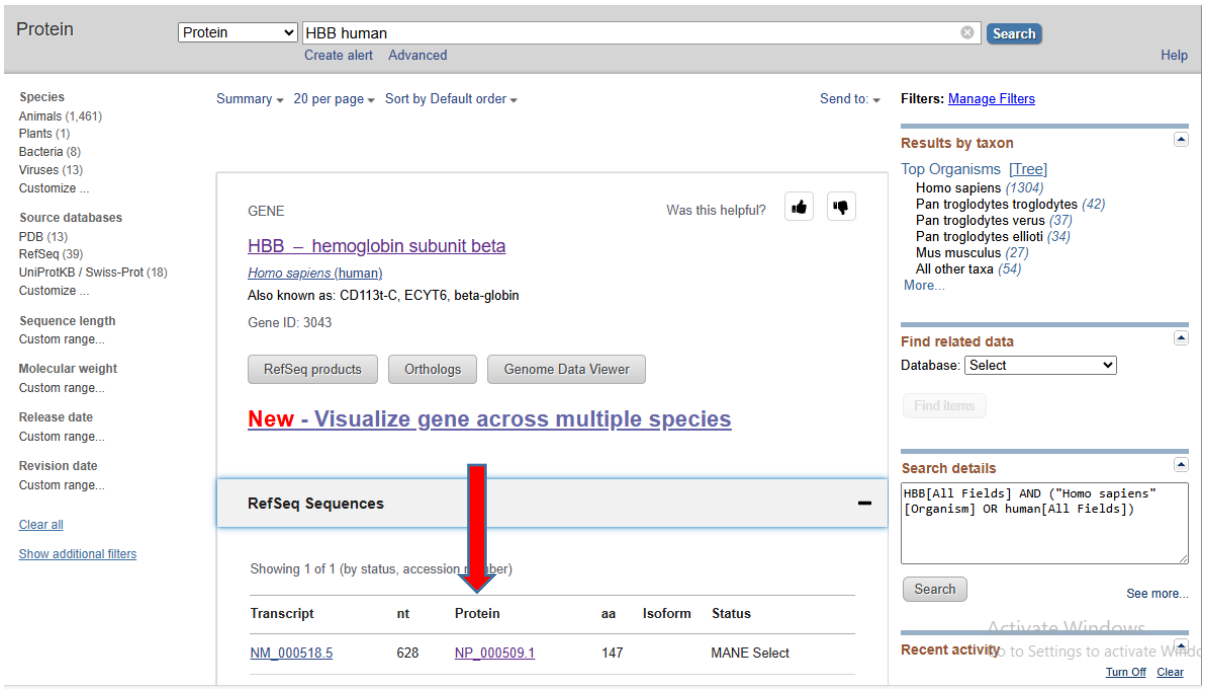

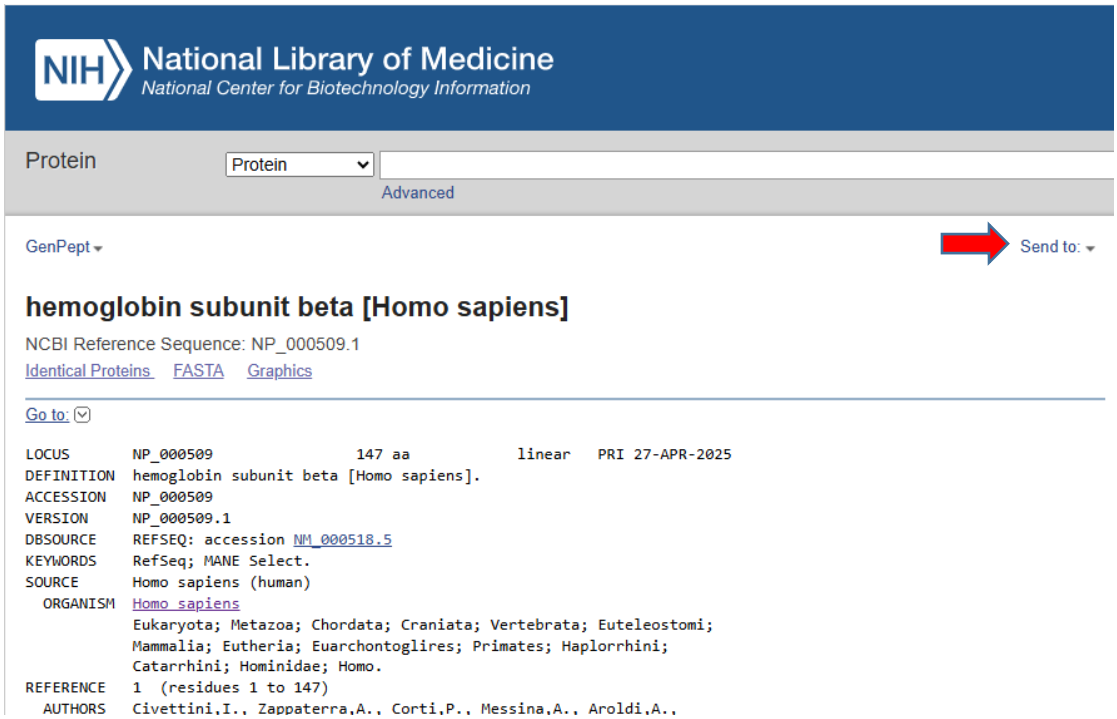

Using BLAST to identify HBB sequences from at least 5 other species, such as chimpanzee, cow, mouse, chicken, and zebrafish.

On the web browser, search BLAST ncbi: https://blast.ncbi.nlm.nih.gov/Blast.cgi

Protein BLAST (blastp) parameters

1. **Database:** non-redundant protein sequence (nr) – default database
2. **Organism**: *Gallus gallus* (taxid:9031), *Danio rerio* (taxid:7955), *Pan troglodytes* (taxid:9598), *Bos taurus* (taxid:9913), *Mus musculus* (taxid:10090) – to optimize search
3. **Program selection**: blastp (protein-protein BLAST) – default
4. **Algorithm selection**: default

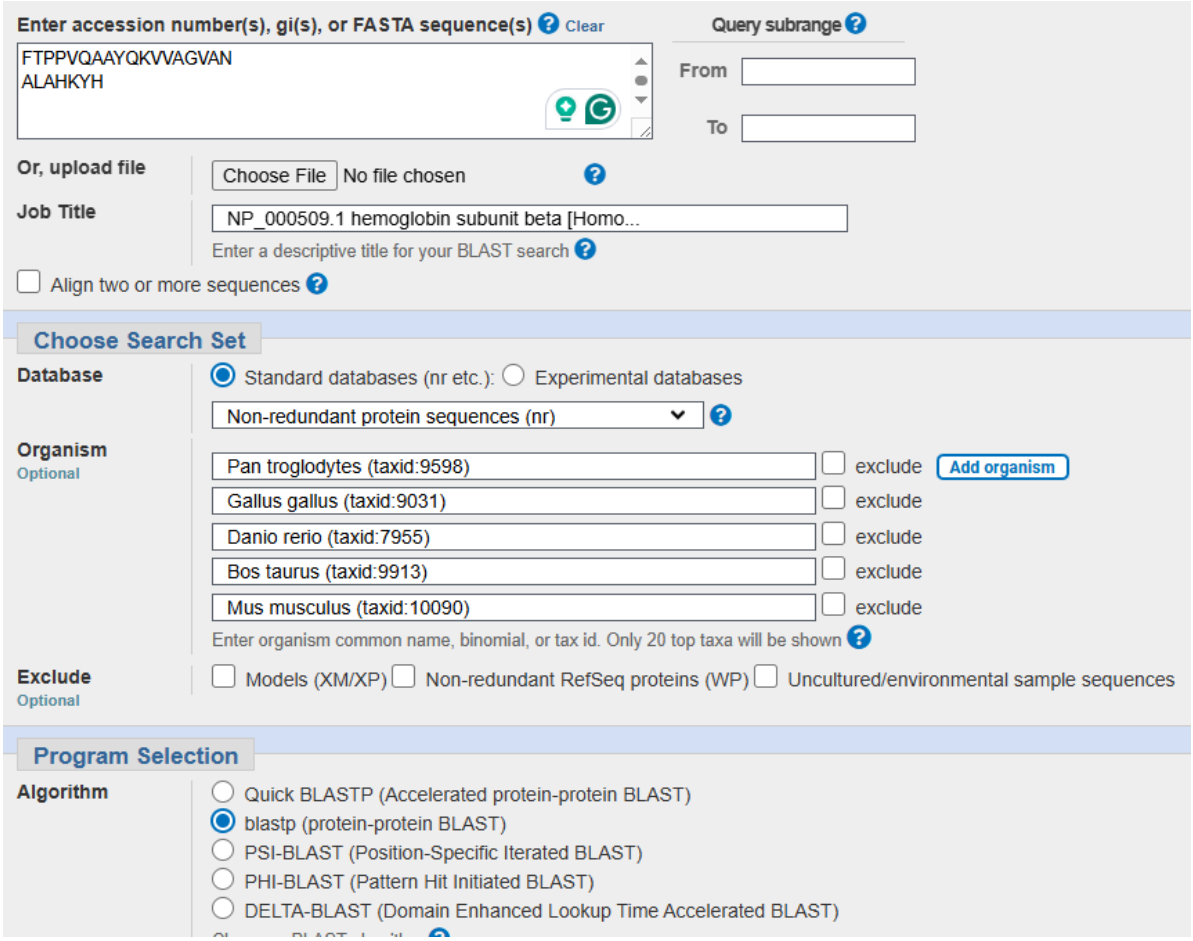

Downloading the FASTA format of these sequences.

1. To download, select the target sequences that best represent your organism, gene of interest, etc. Other parameters to look out for are e value, percentage identity, query cover etc.
2. Click on Download on the top of the table showing all the target sequences result
3. Select FASTA (complete sequences). This will download all the selected sequences as one txt file

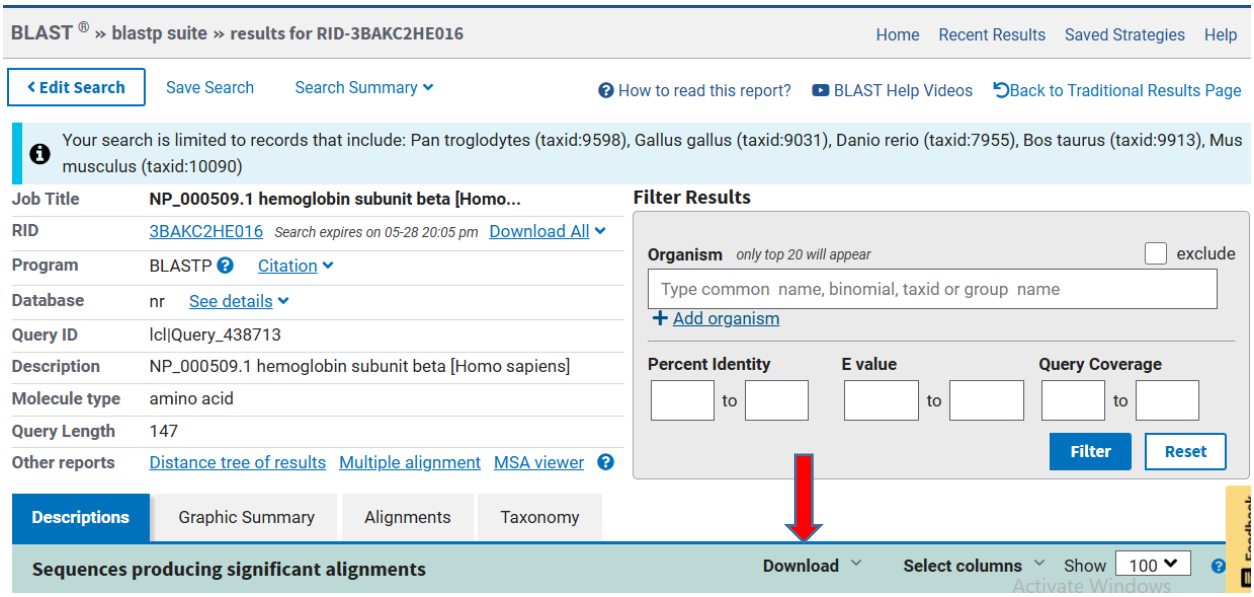

Creating a simple table that shows: Species name Accession number % identity with human HBB

1. To create a table for all your selected sequences, Click on Download on the top of the table showing the list of all target sequences.
2. Select description table (CSV).

Note that the parameters on the description table downloaded will depend on the column selected

Scientific Name	Common Name	Per. ident	Accession
Pan troglodytes	chimpanzee	100	XP_508242.1
Mus musculus	house mouse	80.27	NP_058652.1
Bos taurus	domestic cattle	84.72	NP_776342.1
Gallus gallus	chicken	69.39	NP_990820.1
Danio rerio	zebrafish	50	NP_001003431.2

Task 2: Pairwise Sequence Alignment

To perform pairwise alignments

1. Go to the EMBL-EBI webpage https://www.ebi.ac.uk/
2. Navigate to Job dispatcher (*select data resource – sequence analysis*)
3. Select Needle under pair wise sequence alignment
4. Select Protein as sequence type
5. Paste the 2 sequence into the boxes provided

Alignment parameters used

Parameters

MATRIX EBLOSUM62	GAP OPEN 10
GAP EXTEND 0.5	END GAP false
END GAP OPEN 10	END GAP EXTEND 0.5
OUTPUT FORMAT pair	SEQUENCE TYPE protein

Result: Human HBB vs closely Related Species (e.g., chimpanzee)

% Identity – 100

% Similarity – 100

Number of gaps – 0

Score – 780

```
#
# Aligned_sequences: 2
# 1: NP_000509.1
# 2: XP_508242.1
# Matrix: EBLOSUM62
# Gap_penalty: 10.0
# Extend_penalty: 0.5
#
# Length: 147
# Identity:     147/147 (100.0%)
# Similarity:   147/147 (100.0%)
# Gaps:           0/147 ( 0.0%)
# Score: 780.0
#
#
#=======================================

NP_000509.1        1 MVHLTPEEKSAVTALWGKVNVDEVGGEALGRLLVVYPWTQRFFESFGDLS     50
                     ||||||||||||||||||||||||||||||||||||||||||||||||||
XP_508242.1        1 MVHLTPEEKSAVTALWGKVNVDEVGGEALGRLLVVYPWTQRFFESFGDLS     50

NP_000509.1       51 TPDAVMGNPKVKAHGKKVLGAFSDGLAHLDNLKGTFATLSELHCDKLHVD    100
                     ||||||||||||||||||||||||||||||||||||||||||||||||||
XP_508242.1       51 TPDAVMGNPKVKAHGKKVLGAFSDGLAHLDNLKGTFATLSELHCDKLHVD    100

NP_000509.1      101 PENFRLLGNVLVCVLAHHFGKEFTPPVQAAYQKVVAGVANALAHKYH    147
                     |||||||||||||||||||||||||||||||||||||||||||||||||
XP_508242.1      101 PENFRLLGNVLVCVLAHHFGKEFTPPVQAAYQKVVAGVANALAHKYH    147
```


Result: Human HBB vs distantly Related Species (e.g. Zebra fish)

% Identity – 49.7

% Similarity – 71.4

Number of gaps – 0

Score – 408

```
#
# Aligned_sequences: 2
# 1: NP_000509.1
# 2: NP_001003431.2
# Matrix: EBLOSUM62
# Gap_penalty: 10.0
# Extend_penalty: 0.5
#
# Length: 147
# Identity:      73/147 (49.7%)
# Similarity:   105/147 (71.4%)
# Gaps:           0/147 ( 0.0%)
# Score: 408.0
#
#
#=======================================

NP_000509.1        1 MVHLTPEEKSAVTALWGKVNVDEVGGEALGRLLVVYPWTQRFFESFGDLS     50
                     ||..:..|:..:.::|.|:||||:|.:.|.|:||||||||:|.:|||||
NP_001003431.      1 MVQWSDSERKTIASVWSKINVDEIGPQTLARVLVVYPWTQRYFGAFGDLS     50

NP_000509.1       51 TPDAVMGNPKVKAHGKKVLGAFSDGLAHLDNLKGTFATLSELHCDKLHVD    100
                     ...|:||||||..|||.||.|....:.::|::|.|:|.||:|||:||:||
NP_001003431.     51 CASAIMGNPKVSEHGKTVLKALEKAVKNVDDIKTTYAKLSQLHCEKLNVD    100

NP_000509.1      101 PENFRLLGNVLVCVLAHHFGKEFTPPVQAAYQKVVAGVANALAHKYH    147
                     |:||:||.:.|..|:|.:||..|.|.||:.:||:::.|..||..:|.
NP_001003431.    101 PDNFKLLADCLSIVIATNFGPAFNPSVQSTWQKLLSVVVAALTSRYF    147
```


The results of these sequence alignment shows that the degree of the protein sequence conservation of organisms depends on their level of relatedness (closeness to each other on the evolutionary tree). The hemoglobin protein of the chimpanzee and human was fully conserved while clear evolutionary changes had occurred in the hemoglobin of the zebra fish and human over time.

Task 3: Multiple Sequence Alignment

1. Similarly, to perform multiple sequence alignment of all 6 sequences, select Clustal Omega amongst the available tools in job dispatcher.
2. Copy and paste sequence in the box provided

Alignment with colours

Hide

```
CLUSTAL O(1.2.4) multiple sequence alignment


NP_001003431.2      MVQWSDSERKTIASVWSKINVDEIGPQTLARVLVVYPWTQRYFGAFGDLSCASAIMGNPK        60
NP_990820.1         MVHWTAEEKQLITGLWGKVNVAECGAEALARLLIVYPWTQRFFASFGNLSSPTAILGNPM        60
NP_058652.1         MVHLTDAEKSAVSCLWAKVNPDEVGGEALGRLLVVYPWTQRYFDSFGDLSSASAIMGNPK        60
NP_000509.1         MVHLTPEEKSAVTALWGKVNVDEVGGEALGRLLVVYPWTQRFFESFGDLSTPDAVMGNPK        60
XP_508242.1         MVHLTPEEKSAVTALWGKVNVDEVGGEALGRLLVVYPWTQRFFESFGDLSTPDAVMGNPK        60
NP_776342.1         --MLTAEEKAAVTAFWGKVKVDEVGGEALGRLLVVYPWTQRFFESFGDLSTADAVMNNPK        58
                        :  *:  :: .*.*::  * * ::*.*:*:*******:* :**:**   *::.**

NP_001003431.2      VSEHGKTVLKALEKAVKNVDDIKTTYAKLSQLHCEKLNVDPDNFKLLADCLSIVIATNFG        120
NP_990820.1         VRAHGKKVLTSFGDAVKNLDNIKNTFSQLSELHCDKLHVDPENFRLLGDILIIVLAAHFS        120
NP_058652.1         VKAHGKKVITAFNEGLKNLDNLKGTFASLSELHCDKLHVDPENFRLLGNAIVIVLGHHLG        120
NP_000509.1         VKAHGKKVLGAFSDGLAHLDNLKGTFATLSELHCDKLHVDPENFRLLGNVLVCVLAHHFG        120
XP_508242.1         VKAHGKKVLGAFSDGLAHLDNLKGTFATLSELHCDKLHVDPENFRLLGNVLVCVLAHHFG        120
NP_776342.1         VKAHGKKVLDSFSNGMKHLDDLKGTFAALSELHCDKLHVDPENFKLLGNVLVVVLARNFG        118
                    *  ***.*: :: ..: ::*::* *:: **:***:**:***:**:**.: :  *:. ::.

NP_001003431.2      PAFNPSVQSTWQKLLSVVVAALTSRYF 147
NP_990820.1         KDFTPECQAAWQKLVRVVAHALARKYH 147
NP_058652.1         KDFTPAAQAAFQKVVAGVATALAHKYH 147
NP_000509.1         KEFTPPVQAAYQKVVAGVANALAHKYH 147
XP_508242.1         KEFTPPVQAAYQKVVAGVANALAHKYH 147
NP_776342.1         KEFTPVLQADFQKVVAGVANALAHRYH 145
                      *.*  *: :**::  *. **: :*.
```

Highlight any highly conserved regions

Fully conserved – VYPWTQR

Somewhat conserved – LSELHCDKLHVDPENFKLL

Task 4: Sequence Logo Generation

Upload your MSA file to Skylign. Generate a sequence logo to visualize conserved amino acids.

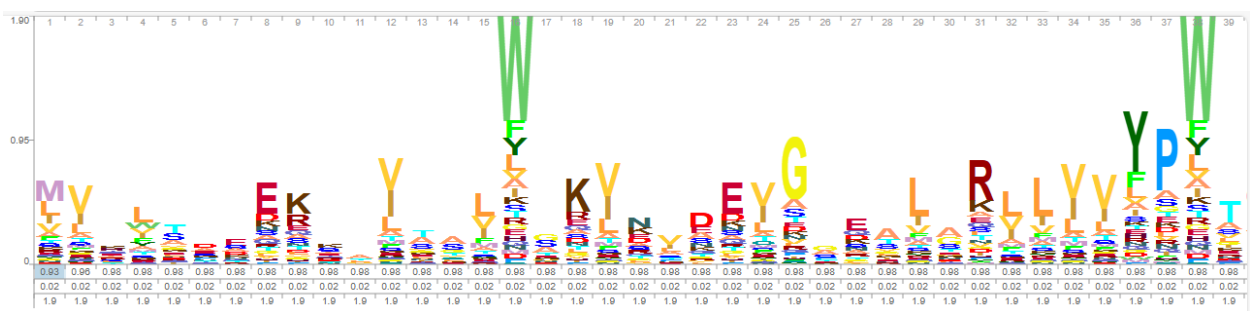

What do you observe?

1. There are varying heights of the base stacks. For some with taller stacks of letters and other with shorter stacks indicating highly conserved and flexible regions
2. The region with taller stacks composed of larger sizes of a single letter
3. There were also recurrent appearances of G and P at specific positions with P appearing after G at an interval of length of 12 aa residues in some cases.

Are there highly conserved residues?

There are about 4 observed conserved residues which are

1. W at position 16 and 38
2. C at position 94
3. Y at position 36 and 146
4. F/Y (appearing at equal size) at position 131

Why might those regions be important?

These regions with highly conserved residues most likely have a functional or structural function

Task 5: Phylogenetic Tree Construction

Use your MSA to generate a phylogenetic tree using MEGA X

Include a screenshot of the tree. Briefly explain: Which species are most closely related based on HBB? Does this tree match what you expect evolutionarily?

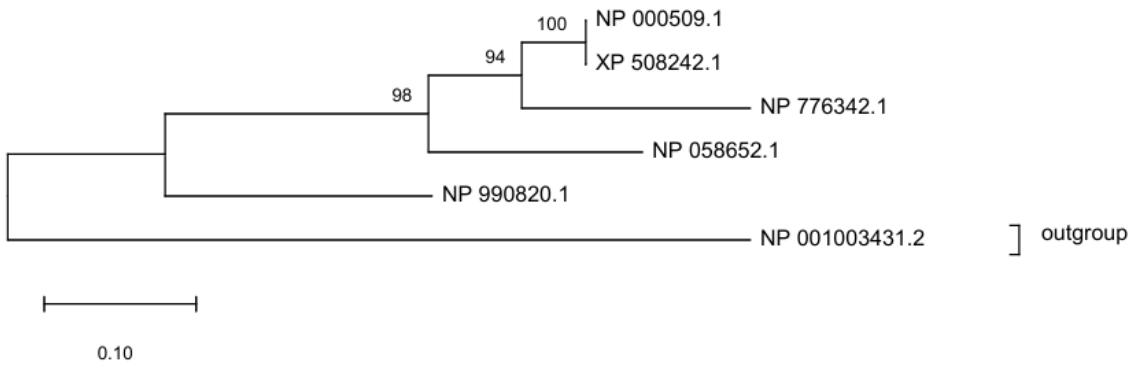

This tree shows a close relation between the Human hemoglobin and that of the Chimpanzee. Interestingly, the hemoglobin of *Bos taurus* clustered closer to that of the Human and Chimpanzee and that of the Mouse clustered further away. This clustering negates the similarities of these organisms at species level with mouse known to be a closer relative to human than cows. This clustering could therefore be evidence of gene-level similarities between organisms that may not follow their normal species level similarity.