8/13/2025

Meeting started at 3:30p.m

Continued to take apart last year's robots

Completed to take apart the robots

Started to build Team A's robot

Meeting Ended 4:30p.m

8/19/2025

Meeting started at 3:30p.m

Continued to build the base of Team A's robot

Added the wheels & motor's to the robot

Meeting Ended 4:30p.m

8/21/2025

Meeting Started 3:30p.m

Finished the base of the robot

Redesigned the way ball is lifted

Meeting Ended 4:30p.m

8/25/2025

Meeting started 3:30p.m

Eli worked on the code on his own time

Completely built the fork lift

Built a back panel to attach the forklift

Meeting Ended 4:30p.m

8/29/2025

Meeting started 3:15p.m

Rebuilt part of the base (the wheel section) & changed way it's connected to back panel

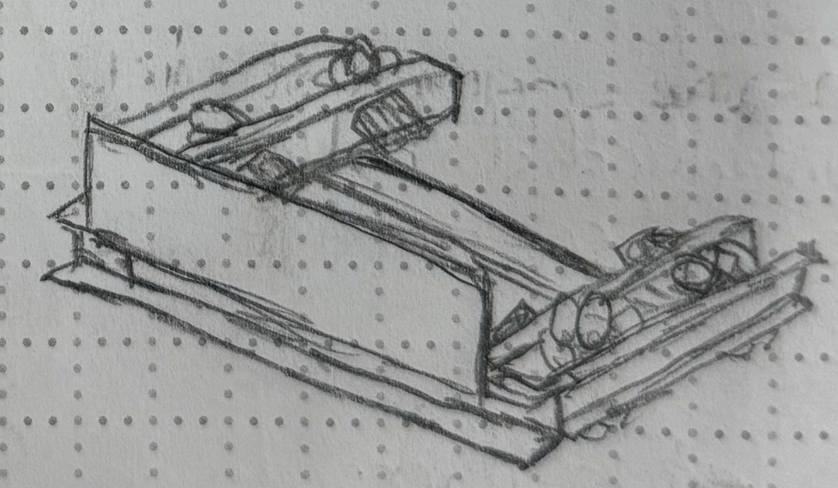

Come up w/ idea to lift up the forklift & connected the lift

Meeting Ended 4:15p.m

9/3/2025

Meeting started 3:15p.m

Redesigned way lift goes up to be a pulley so it can go up & down

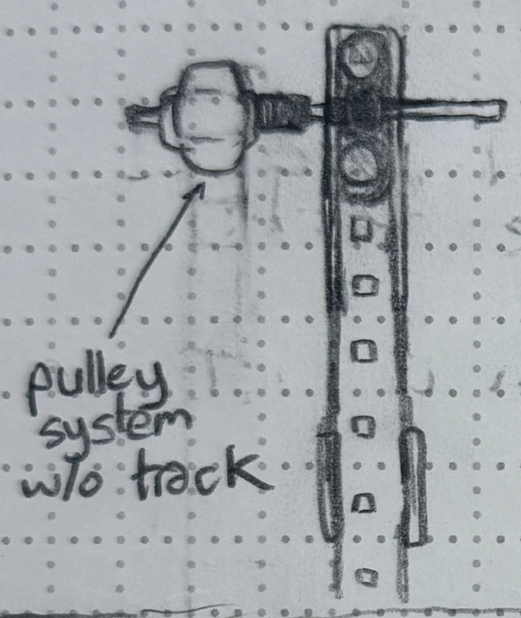

Built the pulley system & attached it to the lift system & robot

Added another pulley system to the robot

Moved the position of lift to be more centered

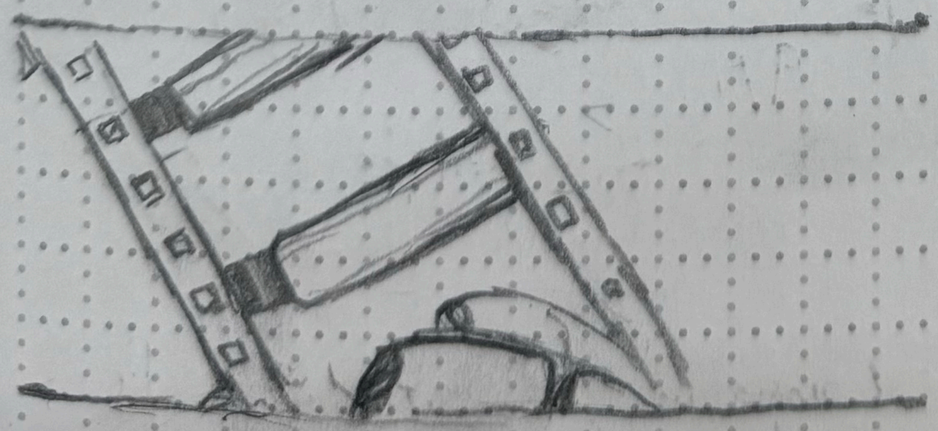

Added standoffs to other side for centralizing

Meeting ended 4:15p.m

9/5/2025

Meeting started 3:15p.m

Cleaned the wheels

Took apart robot's lift because a new idea popped up

Made sure the robot could drive

Placed the wheels back onto the robot

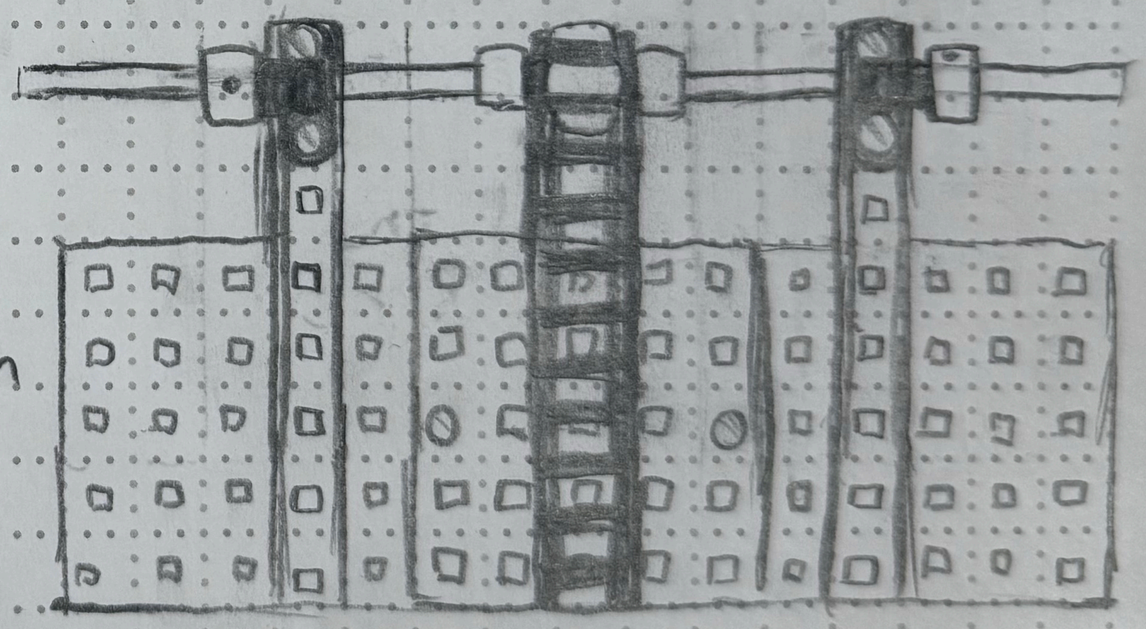

Lifted everything on lift by 1/2 of a spacer

Placed a crossbar to stabalize the lift

Rebuilt lift using new idea

Meeting Ended 4:15p.m

Replaced the green gear boxes w/ blue gear boxes

Found out something was burning through the metal

Meeting ended 4:15p.m

10/4/2025

Attendance: Nathan C, Marco, Eli, Olivia, Nathan D

Replaced the broken rubber bands w/ new ones

Team Logo

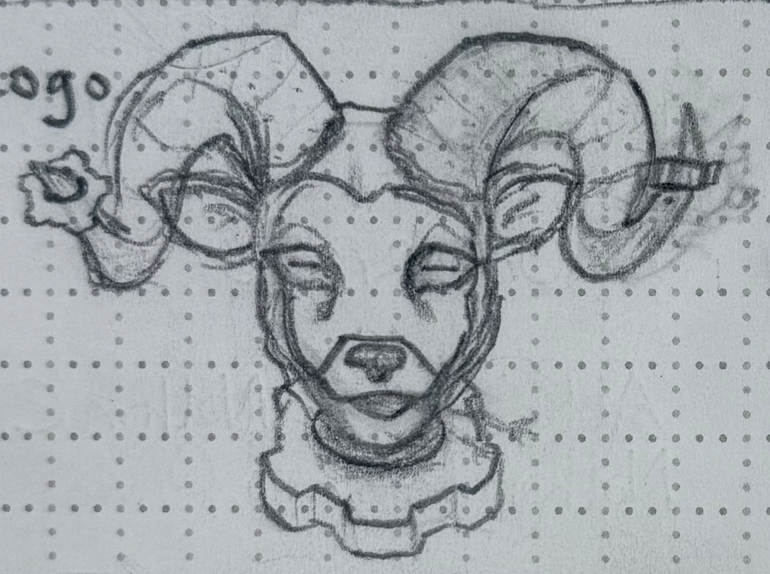

Designed the team logo

Adjusted the middle intake spring wheel's position

Added a 3rd intake spring wheel, positioned higher than others

Replaced the front wheel's rubber bands as they were about to snap

Added a 4th intake spring wheel

Moved the practice arena

Meeting ended 1:00p.m

10/7/2025

Attendance: Nathan C, Eli, Olivia, Yamila, Nathan D, Marco

Meeting started 3:15p.m

Replaced more broken rubber bands

Cleaned up the practice arena & the robotics room

Meeting ended 4:15p.m

10/9/2025

Attendance: Nathan C, Eli, Marco, Nathan D, Yamila, Olivia

Meeting ended 3:15p.m

Adjusted the intake spring wheels

Replaced the vertical roller shafts w/ smaller ones

Meeting ended 4:15p.m

10/10/2025

Attendance: Marco, Olivia, Yamila, Eli, Nathan C

Meeting began 3:15p.m

Flipped the vertical roller shafts

Added a bridge to the vertical roller shafts

Added a ramp to the bridge

Added a 2nd floor to the wheel section

Elevated the 2nd floor

Meeting ended 4:15p.m

Cleaned field & set it up

Put rubber bands on ramp for grip

Created & attached a semi wall for grip

Prepared the toolboxes

Attached the brain to the top of the robot

10/11/2025

Attendance: Eli, Marco, Olivia, Yamila, Nathan C, Nathan D

Meeting began 9:00a.m

Added a crossbar system

Added wheel to "2nd floor"

Tested the robot

Sorted the screws by size

9/19/2025

Attendance: Nathan C, Nathan D, Marco, Yamila

Meeting began 3:15p.m

Continued to build the flywheel

What we intend to build a modified version

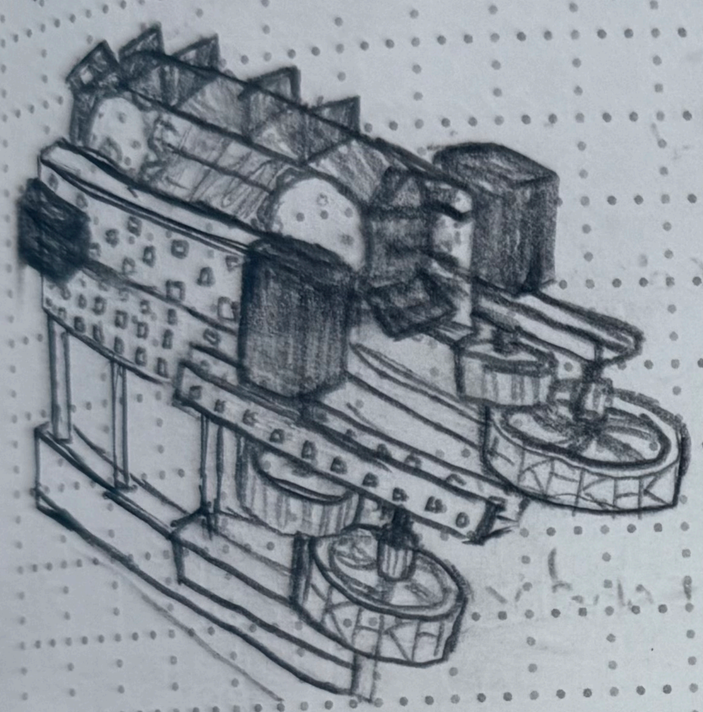

9/25/2025

Attendance: Nathan C, Nathan D, Marco, Eli, Yamila

Meeting began 3:15p.m

Deesembled part of flywheel (part w/ spinning wheels)

Created a wheel connected by rubber bands to replace the removed part

Meeting ended 4:15p.m

9/29/2025

Attendance: Nathan C, Eli, Yamila, Marco, Nathan D, Olivia

Meeting began 3:15p.m

Removed the forklift

Replaced the forklift w/ an "intake spring wheel"

Built more "intake spring wheels"

Created a track

Meeting ended 4:15p.m

10/1/2025

Attendance: Nathan C, Eli, Marco, Nathan D, Yamila, Olivia

Meeting began 3:15pm

Attached another intake spring wheel to the robot

Reattached the VEX brain to the robot

Tested to make sure robot works, it does

Accidentally overheated intake motor, replaced it

Project

Date

Name

VEX ROBOTICS

PROPRIETARY INFORMATION

9/11/2025

People present in meeting
Eli, Nathaniel, Nathan, Yamila
Marco

Meeting began 3:15 p.m

Added another crossbridge to the lift

Built a movement-tracking system to code

Added a motor to forklift so it can move up & down

Created both the red & blue license plates for robot

Meeting ended 4:15p.m

9/13/2025

People present in meeting
Eli, Nathan, Yamila, Marco, Nathaniel

Meeting began 9:00a.m

Removed the battery & brain to move it because it is too heavy to be all in the back

Installed a motor to the forklift

Added something to help attach motor to lift

Tightened the cross bridges

Removed back panel to move it back a bit more

Built 2 tracks

Attached the lift onto the robot

Meeting ended 12:00p.m

9/15/2025

People present in meeting-
Eli, Nathan, Nathaniel Yamila

Meeting began 3:15p.m

Added back support to the lift

9/17/25

Attendance: Nathan

Began 3:25

Started building a flywheel for our robot

Project

Name

Date

progress Entries

- 8/8/25 -

started meeting 3:30 PM

started building the practice arena

Took all members Names and contact info.

Made sure everyone was in the Rambotics Google classroom.

Meeting Ended 5:30 PM

Names and info

Nathaniel Davis - steamtrains@outlook.com
-661-800-872

Gavin Frank - frankg2028@mygarces.org
661-337-1353

Pascal Clerou - pclerou2029@mygarces.org
661-889-4802

Nathan Catalan - Catalanin2028@mygarces.org
661-569-4733

Marco Hernandez - Hernandezm2029@mygarces.org
661-699-3861

Slayton Reid - Reidslayton3@outlook.com
661-599-1124

Jaslen Grewal - jgrewal2029@mygarces.org
661-619-4465

James Roy - Royj2028@mygarces.org
661-429-4659

Eli Ozcan - Eozcan2029@mygarces.org
661-932-3356

-8/11/2025-

Meeting Started At 3:30 p.m

Continued to build the practice arena & Completed it

Started to remove old robots

Started to design the robots

Meeting Ended 4:30 p.m

Robotic Team Norms
1. Make 1 complete practice per week
2. Know your role - Do it
3. Debate, don't argue
4. Support each other
5. Give your best

Expectations
1. Teamwork & Collaboration
2. Engineering Design Process
3. Technical Skill Development
4. Comp. Readiness
5. Leadership & Initiative
6. Judging Expectations