Progress Entries

- 8/8/25 -

Started meeting 3:30PM

Started building the practice arena

Took all members Names and contact info,

Made sure everyone was in the Rambotics Google classroom.

Meeting Ended 5:30PM

Names and info

Nathaniel Davis - steamtrains@outlook.com
-661-800-872

Gavin Frank - Frank92028@mygarces.org
661-337-1353

Pascal Clerou - pclerou2029@mygarces.org
661-889-4802

Nathan Catalan - Catalann2028@mygarces.org
661-569-4733

Marco Hernandez - mhernandez2029@mygarces.org
661-699-3861

Slayton Reid - Reidslayton3@outlook.com
661-544-1124

Jaslin Grewal - jgrewal2029@mygarces.org
661-619-4465

James Roy - Royj2028@mygarces.org
661-429-4659

Eli Ozcan - Eozcan2029@mygarces.org
661-432-3356

- 8/11/2025 -

Meeting Started At 3:30p.m

Continued to build the practice arena & Completed it

Started to remove old robots

Started to design the robots

Meeting Ended 4:30p.m

Robotic Team Norms
1. Make 1 complete practice per week
2. Know your role - Do it
3. Debate, don't argue
4. Support each other
5. Give your best

Expectations
1. Teamwork & Collaboration
2. Engineering Design Process
3. Technical Skill Development
4. Comp. Readiness
5. Leadership & Initiative
6. Judging Expectations

Project Garces Rambotics

Date 8/8/25

Name

VEX ROBOTICS

PROPRIETARY INFORMATION

8/13/2025

Meeting started at 3:30p.m

Continued to take apart last year's robots

Completed to take apart the robots

Started to build Team A's robot

Meeting Ended 4:30p.m

8/19/2025

Meeting started at 3:30p.m

Continued to build the base of Team A's robot

Added the wheels & motor's to the robot

Meeting Ended 4:30p.m

8/21/2025

Meeting Started 3:30p.m

Finished the base of the robot

Redesigned the way ball is lifted

Meeting Ended 4:30p.m

8/25/2025

Meeting started 3:30p.m

Eli worked on the code on his own time

Completely built the fork lift

Built a back panel to attach the forklift

Meeting Ended 4:30p.m

8/29/2025

Meeting started 3:15p.m

Rebuilt part of the base (the wheel section) & changed way it's connected to back panel

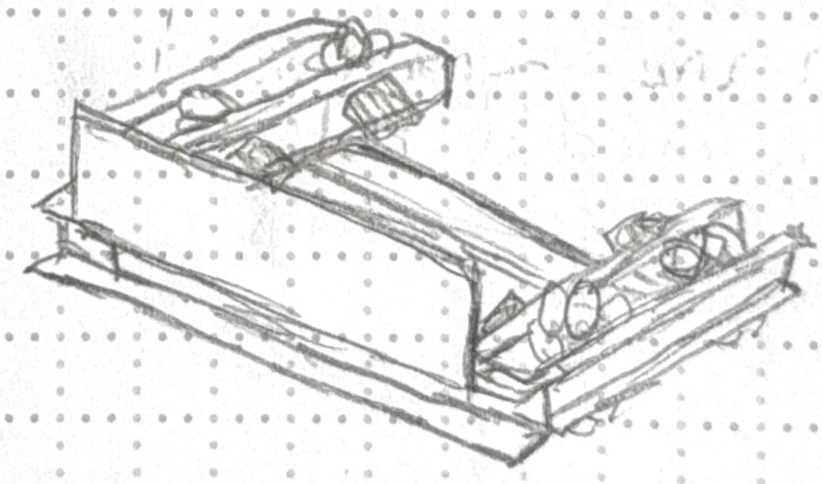

Come up w/ idea to lift up the forklift & connected the lift

Meeting Ended 4:15p.m

9/3/2025

Meeting started 3:15p.m

Redesigned way lift goes up to be a pulley so it can go up & down

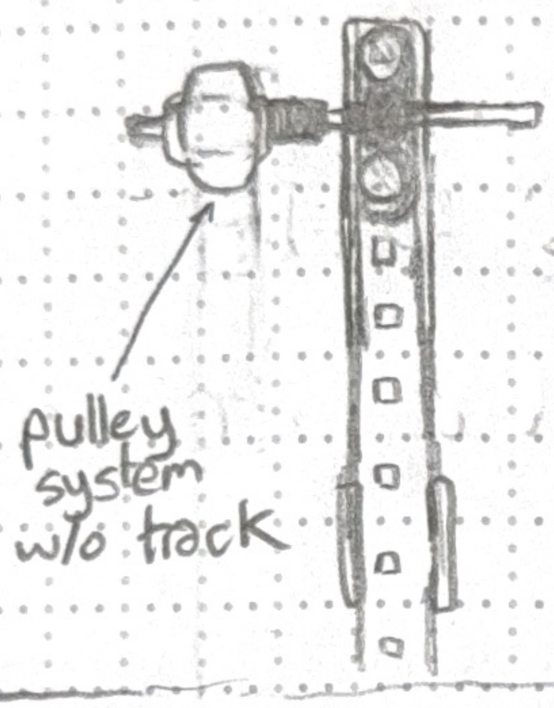

Built the pulley system & attached it to the lift system & robot

Added another pulley system to the robot

Moved the position of lift to be more centered

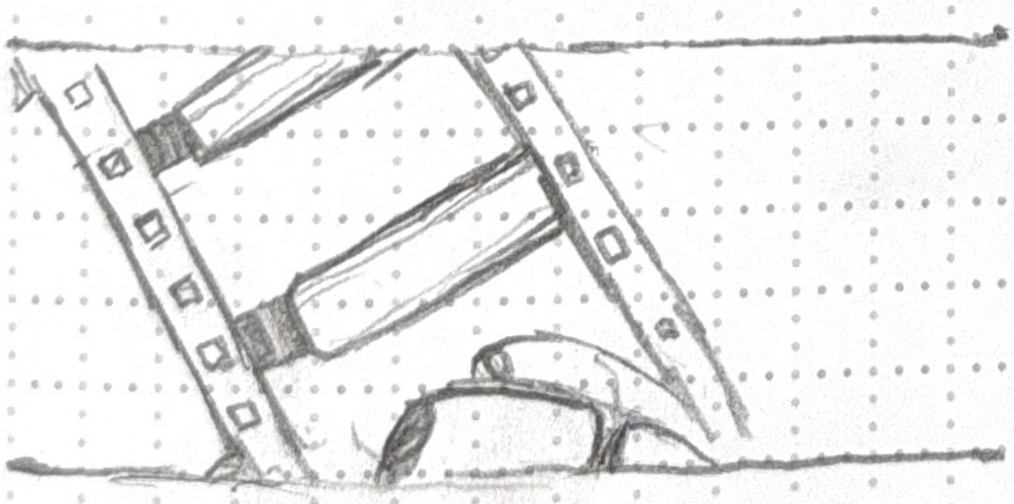

Added standoffs to other side for centralizing

Meeting ended 4:15p.m

9/5/2025

Meeting started 3:15p.m

Cleaned the wheels

Took apart robot's lift because a new idea popped up

Made sure the robot could drive

Placed the wheels back onto the robot

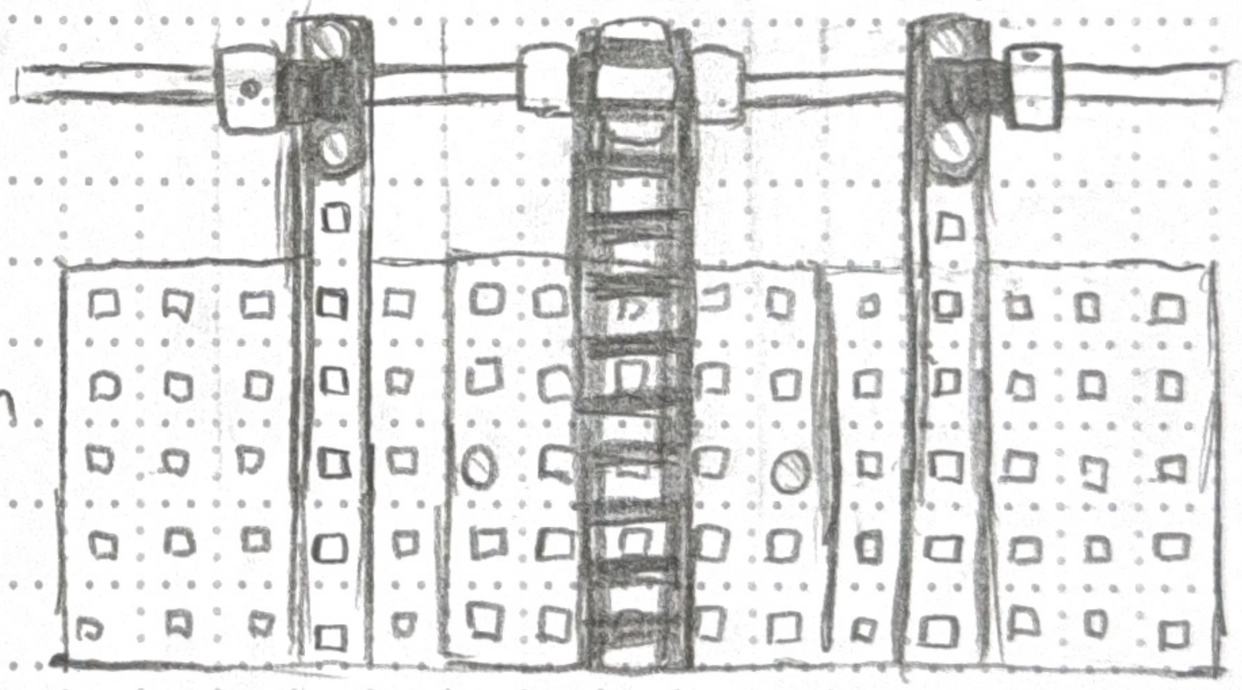

Lifted everything on lift by 1/2 of a spacer

Placed a crossbar to stabalize the lift

Rebuilt lift using new idea

Meeting Ended 4:15p.m

Name

Project

Date

9/11/2025

People present in meeting
Eli, Nathaniel, Nathan, Yamila, Marco

Meeting began 3:15 p.m

Added another crossbridge to the lift

Built a movement-tracking system to code

Added a motor to forklift so it can move up & down

Created both the red & blue license plates for robot

Meeting ended 4:15p.m

9/13/2025

People present in meeting:
Eli, Nathan, Yamila, Marco, Nathaniel

Meeting began 9:00a.m

Removed the battery & brain to move it because it is too heavy to be all in the back

Installed a motor to the forklift

Added something to help attach motor to lift

Tightened the cross bridges

Removed back panel to move it back a bit more

Built 2 tracks

Attached the lift onto the robot

Meeting ended 12:00p.m

9/15/2025

People present in meeting:
Eli, Nathan, Nathaniel, Yamila

Meeting began 3:15p.m

Added back support to the lift