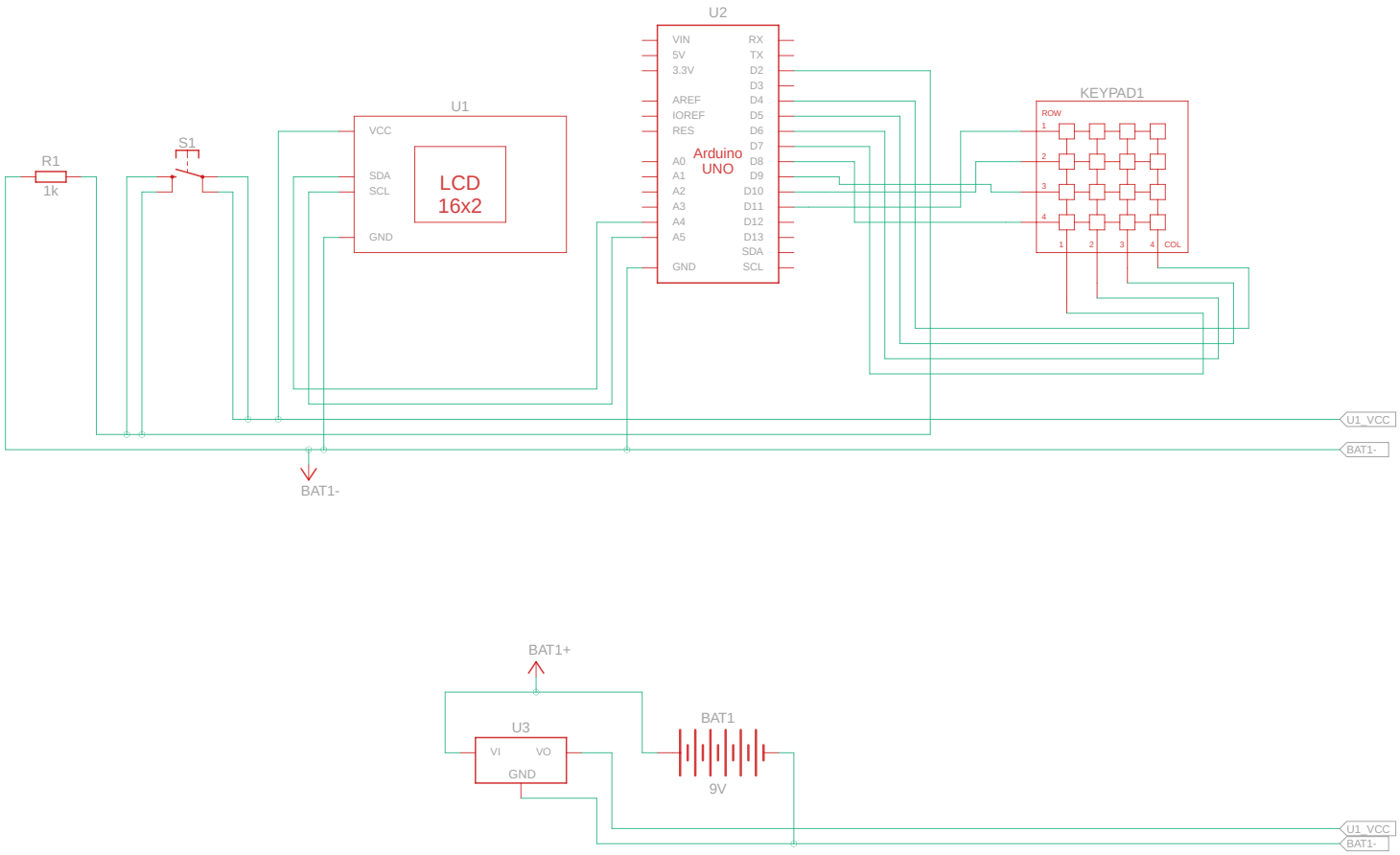

Made with Tinkercad®

Title: HESAP MAKNES PROJES	
Date: 02.10.2022 15:13:13	Sheet: 1/1