EQUIPMENTS FOR HANDELING THE MATERIALS, ERECTION OF STRUCTURES AND TYPES OF CRANES

ISHPREET KAUR- 2014112

JASKARAN SINGH – 2014113

SAHIL SINGLA – 2014126

MANDEEP KAUR - 2014129

CONTENTS:-

- Definition
- Types of material handling equipments.
- Erection of structures equipments.
- Types of cranes.

EQUIPMENTS FOR HANDELING THE MATERIALS

JASKARAN SINGH

CRN-2014113

URN-2104033

Material handling equipments :-

Material handling equipment and systems are crucial to many companies that need to handle and store bulk material. Generally, material handling equipment refers to equipment designed to move, control, protect or store material through various processes at warehouses and facilities.

TYPES OF MATERIAL HANDLING EQUIPMENTS:-

BULK HANDLING MATERIAL EQUIPMENTS:-

- Bulk handling material handling equipment covers equipment that transports, stores and controls bulk materials. The main components are as follows:-

HOPPER

- HOPPERS ARE LARGE FUNNEL-SHAPED OBJECTS WITH OPENINGS THAT CLOSE. COMPANIES USE HOPPERS TO POUR LOOSE MATERIALS INTO CONTAINERS.

RECLAIMER

Reclaimers are large machines designed to pick up loose materials from a company's stockpile.

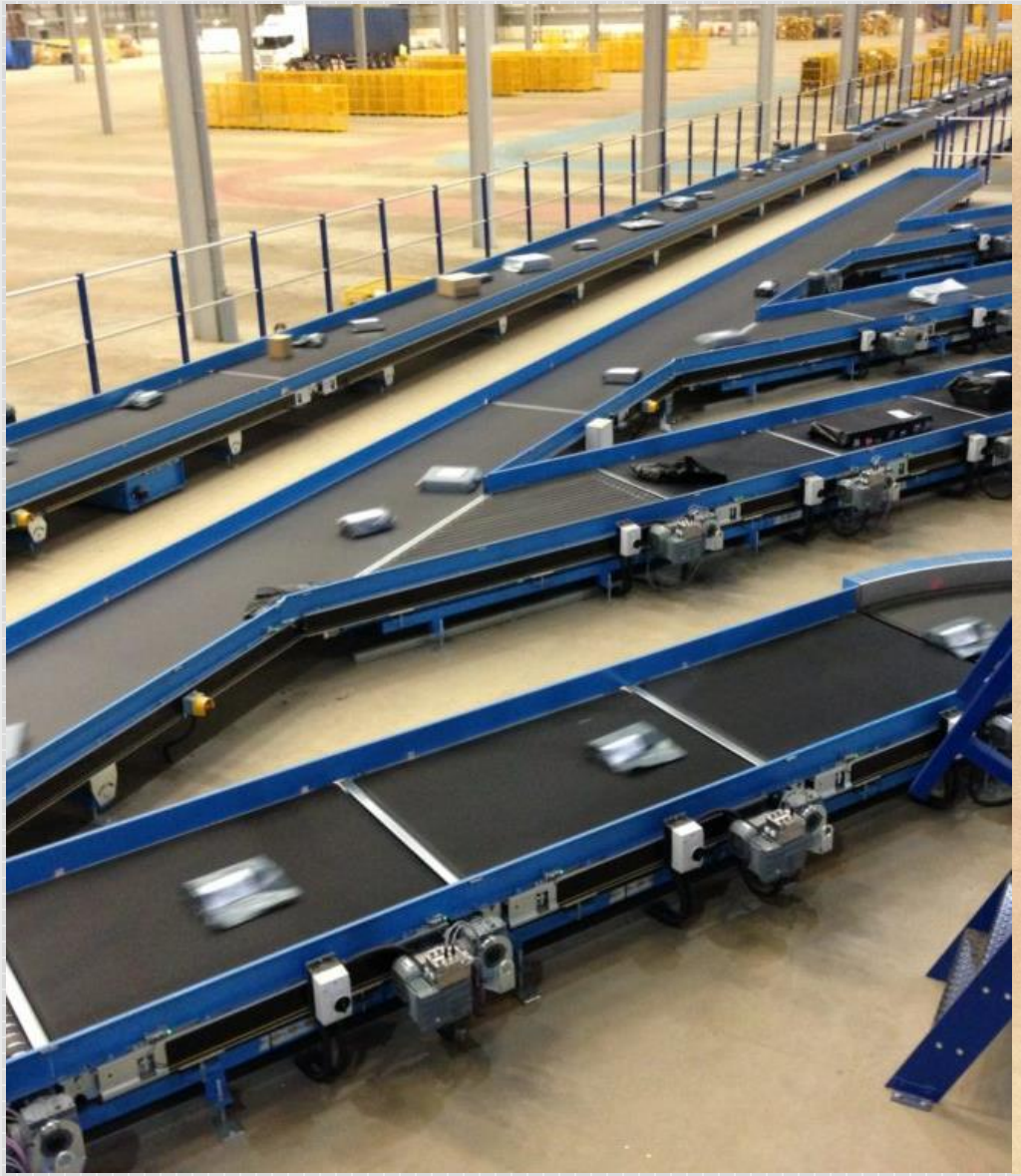

CONVEYOR BELTS

- CONVEYOR BELTS ARE AN ESSENTIAL PART OF A CONVEYOR SYSTEM. THEY USE DRUMS OR PULLEYS TO ROTATE THEIR BELTS AND MOVE MATERIALS IN BULK FROM ONE LOCATION TO ANOTHER.

STACKERS

- STACKERS ARE KEY TO BULK MATERIAL HANDLING. THIS AUTOMATED EQUIPMENT CAN MOVE LOOSE MATERIALS TO STOCKPILES ON THEIR OWN.

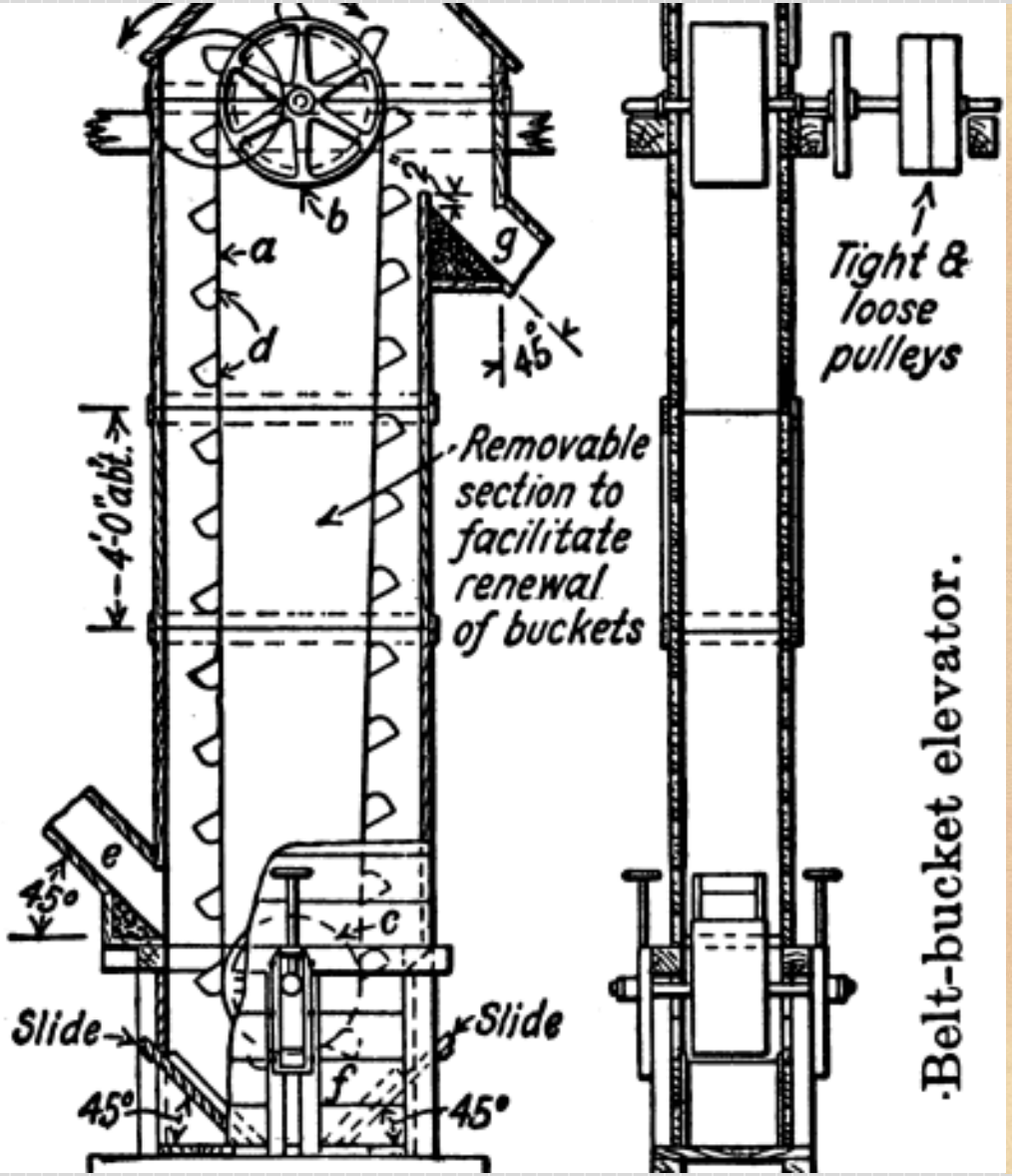

Belt-bucket elevator.

BUCKET AND GRAIN ELEVATOR

- SOMETIMES REFERRED TO AS GRAIN LEGS, BUCKET ELEVATORS VERTICALLY MOVE BULK MATERIALS. THEY'LL TRANSPORT THESE MATERIALS ON A PRODUCTION PATHWAY AND SOMETIMES STORE THEM.

STORAGE AND HANDLING EQUIPMENT:-

Storage and handling equipment helps safely store and organize materials while they await another stage in the production or distribution process. Depending on a company’s needs, they may use this storage equipment to hold materials for short or long periods. Here are some of the most common storage and handling equipment:

DRAWERS, BINS AND SHELVES

- YOU CAN FIND SHELVING USED TO STORE AND ORGANIZE BASIC MATERIALS. BINS AND DRAWERS ARE MORE POPULAR WHEN A COMPANY NEEDS TO ORGANIZE SMALLER MATERIALS THAT COULD BE EASILY LOST OTHERWISE.

MEZZANINE

A mezzanine refers to a raised indoor platform that creates another storage area above the ground. These mezzanines help companies store items vertically and free up space on their warehouse floor. They come in modular, rack supported, movable, free-standing and building supported forms.

RACKS

- RACKS HELP COMPANIES STORE THEIR MATERIALS IN ACCESSIBLE LOCATIONS AND SAVE FLOOR SPACE. YOU CAN FIND RACKS DESIGNED FOR VARIOUS USES, SUCH AS SLIDING RACKS, DRIVE-IN OR DRIVE-THROUGH RACKS, PALLET TRACKS AND PUSH-BACK RACKS.

STAKING FRAMES

- MANUFACTURERS DESIGN STACKING FRAMES TO EASILY STACK ON TOP OF ONE ANOTHER. THEY'RE ONE OF THE MAIN TYPES OF STORAGE EQUIPMENT IN MATERIAL HANDLING, AS THEY SAFELY STORE PALLETS FILLED WITH FRAGILE EQUIPMENT, SAVING SPACE AS A RESULT.

INDUSTRIAL MATERIAL HANDELING TRUCKS:-

Industrial trucks cover a wide swath of equipment, and they're all designed to assist with material transportation. These industrial trucks can range from small, hand-operated equipment to large, drivable equipment. Here are some of the primary kinds of industrial trucks:-

HAND TRUCKS

- HAND TRUCKS ARE COMMONLY CALLED DOLLIES, AND THEY'RE A SIMPLE PIECE OF EQUIPMENT DESIGNED TO GIVE OPERATORS THE LEVERAGE THEY NEED TO ROLL HEAVY MATERIALS TO NEW LOCATIONS.

SIDE LOADERS

Manufacturers craft side loaders to fit between narrow aisles, easily picking up items on either side of them.

PALLET TRUCKS

Otherwise known as forklifts, pallet trucks are machines operators can use to lift heavy pallets. They feature forks designed to slip under the pallet, lift it up and then secure it as the operator takes it to a new location. You can find manual and electrical forklifts in various warehouses around the country.

ORDER PICKERS

- WHEN OPERATORS NEED TO ACCESS MATERIALS STORED UP HIGH, THEY USE ORDER PICKERS. THESE MACHINES SAFELY LIFT OPERATORS, ALLOWING THEM TO ACCESS HARD-TO-REACH MATERIALS.

ENGINEERED MATERIAL HANDLING SYSTEMS:-

They're very popular since they remove the need for manual labor to complete various tasks. Here are some of the primary kinds of engineered systems:

AUTOMATED STORAGE AND RETRIEVAL SYSTEMS (AS/RS)

- AN AS/RS IS A VERY POPULAR TYPE OF ENGINEERED SYSTEM, AS IT CAN HANDLE LOTS OF WORK. IT UTILIZES A SHUTTLE TO PICK UP LOOSE MATERIALS AND THEN PLACE THEM ON NEEDED PARTS OF THE SYSTEM, AND THE PICKING PROCESS CAN BE MANUALLY OPERATED OR AUTOMATED.

AUTOMATED GUIDED VEHICLES (AGVs):-

AGVs are computer-operated trucks featuring sensors and detectors. These vehicles can be entirely autonomous, moving materials safely around your facility on a fixed path.

ROBOTIC DELIVERY SYSTEM

- MANY FACILITIES UTILIZE AUTOMATED ROBOTIC DELIVERY SYSTEMS TO TRANSPORT MATERIALS. COMPANIES TYPICALLY USE THESE SYSTEMS TO TRANSPORT MATERIALS ON AN ASSEMBLY LINE.

CONVEYOR SYSTEMS

Conveyor systems feature several devices and mechanical assemblies that automatically transport materials throughout a facility. These conveyor systems come in multiple varieties, like apron, cleated, chain, overhead and vehicle conveyor systems.

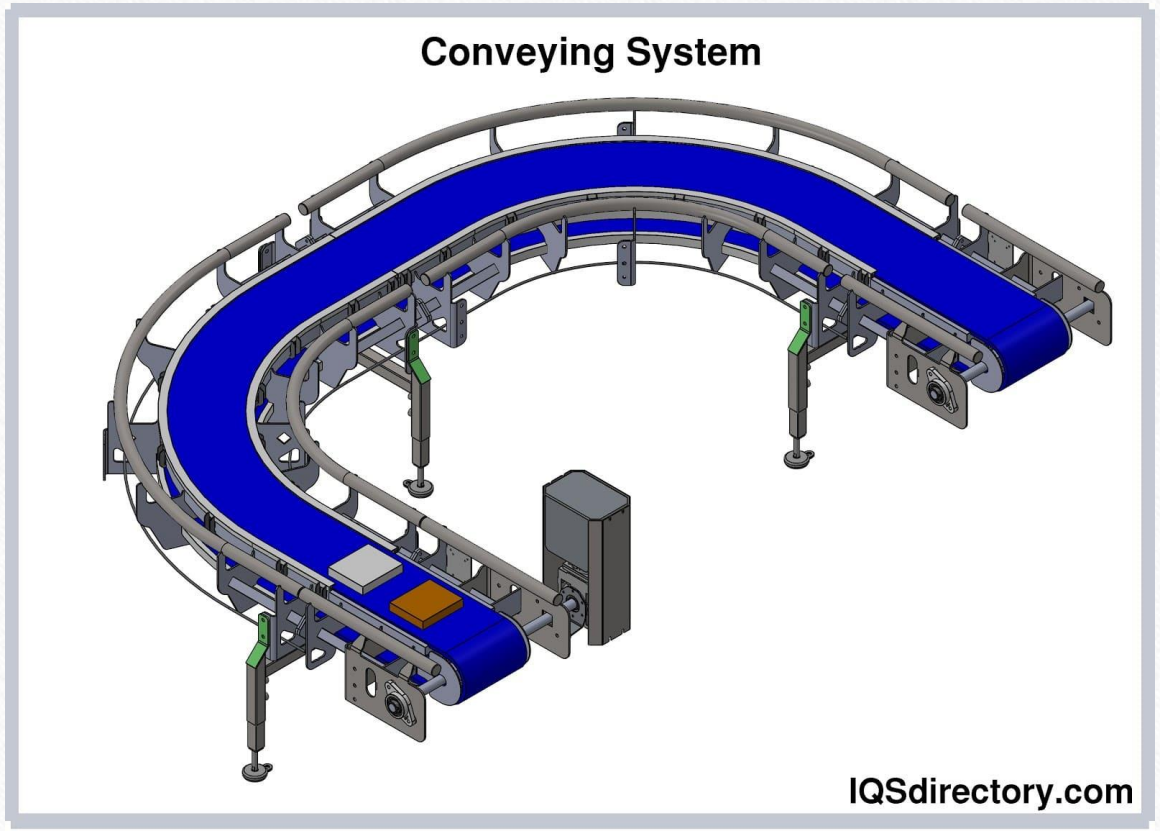

EQUIPMENTS FOR ERECTION OF STRUCTURES

SAHIL SINGLA

CRN-2014126

URN-2104049

Erection of structure

The erection of structure consists of the assembly of components of a structure into a frame on site. The processes involve lifting and placing of components into position, then connecting them together.

EQUIPMENTS FOR ERECTION OF STRUCTURES

CRANES

A crane is a type of machine, generally equipped with a hoist rope, wire ropes or chains, and sheaves, that can be used both to lift and lower materials and to move them horizontally. It is mainly used for lifting heavy objects and transporting them to other places.

Advantages of cranes:

Can lift and move heavy materials

Efficient for high-rise construction

Versatile and can be used for various construction tasks

Disadvantages of cranes:

Expensive to purchase and maintain

Require trained and skilled operators

The first known crane machine was the shaduf, for water-lifting purpose.

AERIAL WORK PLATFORM

Aerial platforms are special machines that enable people to be safely lifted to a certain height along with materials to carry out activities at that position. The aerial lift is a good alternative compared to scaffolds, especially when the activities are not too long.

The image shows how a boom lift makes an easy and comfortable workspace even at the top edges. This saves the lives and the time of the project.

THREE MAIN TYPES CAN BE DISTINGUISHED:

- SCISSOR AERIAL PLATFORM
- ARTICULATED ARM AERIAL PLATFORM
- TELESCOPIC BOOM AERIAL PLATFORM

THEY ALL CONSIST OF A BASEFRAME, LIFTING MECHANISM AND A PLATFORM.

A scissor aerial platform makes a vertical movement. In contrast to a telescopic boom or articulated arm platform, the scissor platform often remains above the contours of the baseframe without any horizontal outreach.
The big advantage of this type of lifting mechanism is the capability for large lifting capacities. Even large and heavy equipment or material can be safely transported to the working location at a certain height.
When not only vertical movement is required but also a large(r) horizontal outreach, a telescopic boom or articulated arm aerial platform is required. Telescopic boom or articulated arm platforms can generally reach much higher than scissor platforms. Some reach heights of up to 100m! The large disadvantage of these types of aerial platforms is the working area of the platform. Because of the large horizontal outreach, the working area is much smaller, and the loading capacity is much lower (normally 1to 2 persons)

Material Hoist

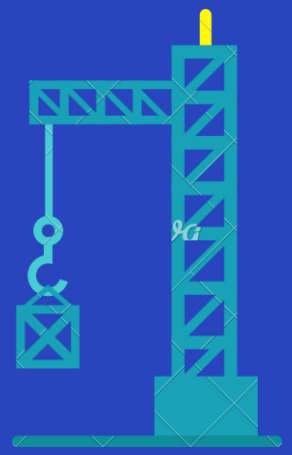

These are designed for the vertical transportation of materials and under no circumstances should they be used to transport passengers. Most material hoists are mobile, can be dismantled, folded onto the chassis and moved to another position or site under their own power or towed by a haulage vehicle. When in use material hoists need to be stabilized and /or tied to the structure

Electric Winches

- Electric winches are most suitable for erection of fabricated components. Construction winch can lift heavy objects vertically, horizontally or oblique.
- The electric winch is widely used because of its simple operation, large load capacity and convenient displacement. It is suitable for construction and installation companies, and the installation of components for various bridges, roads, ports, and dock engineering projects.

RIGGING EQUIPMENTS

Rigging equipment is a set of tools used to hold and distribute heavy loads in the moving process. It securely connects the load to the lifting machines to move objects from one point to another.

Riggers set up the equipment needed to assist with lifting heavy loads. They secure the load using different tools and ensure they don’t fall off during the process. After preparing the object, it’s ready to be transported. This part is where lifting comes in. It involves moving and placing materials and people around the site.

Rigging Hook It connects chains, ropes, slings, and other rigging equipment during the moving process. Having a secure hold on heavy loads prevents them from slipping while suspended in the air.

Wire Ropes This equipment supports the shape of the load during the lifting process. It's often mounted to the crane with hooks, shackles, or swivels to attach and move a load. **Pulleys & Blocks** They work in tandem to help lift heavy objects without unnecessary force. They provide adequate support while reducing the pressure required to lift the load.The pulley works by looping a rigging rope to the pulley and attaching it to the object. It holds the rope as it moves the load.

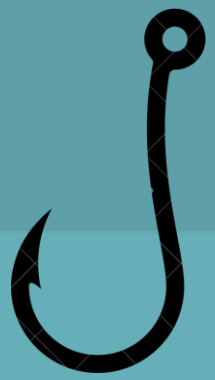

Spreader Bars & Lifting Beams These tools connect the object and the crane while lifting. They stabilize the weight of the load for a more manageable lift. Their use will depend on the type of load that requires support. When lifting heavy weights, it’s best to use spreader bars. Just as the name implies, this tool spreads the load widely and makes it easier to carry. Meanwhile, lifting beams are more suitable for lighter loads, as they can take all the weight from a single point.

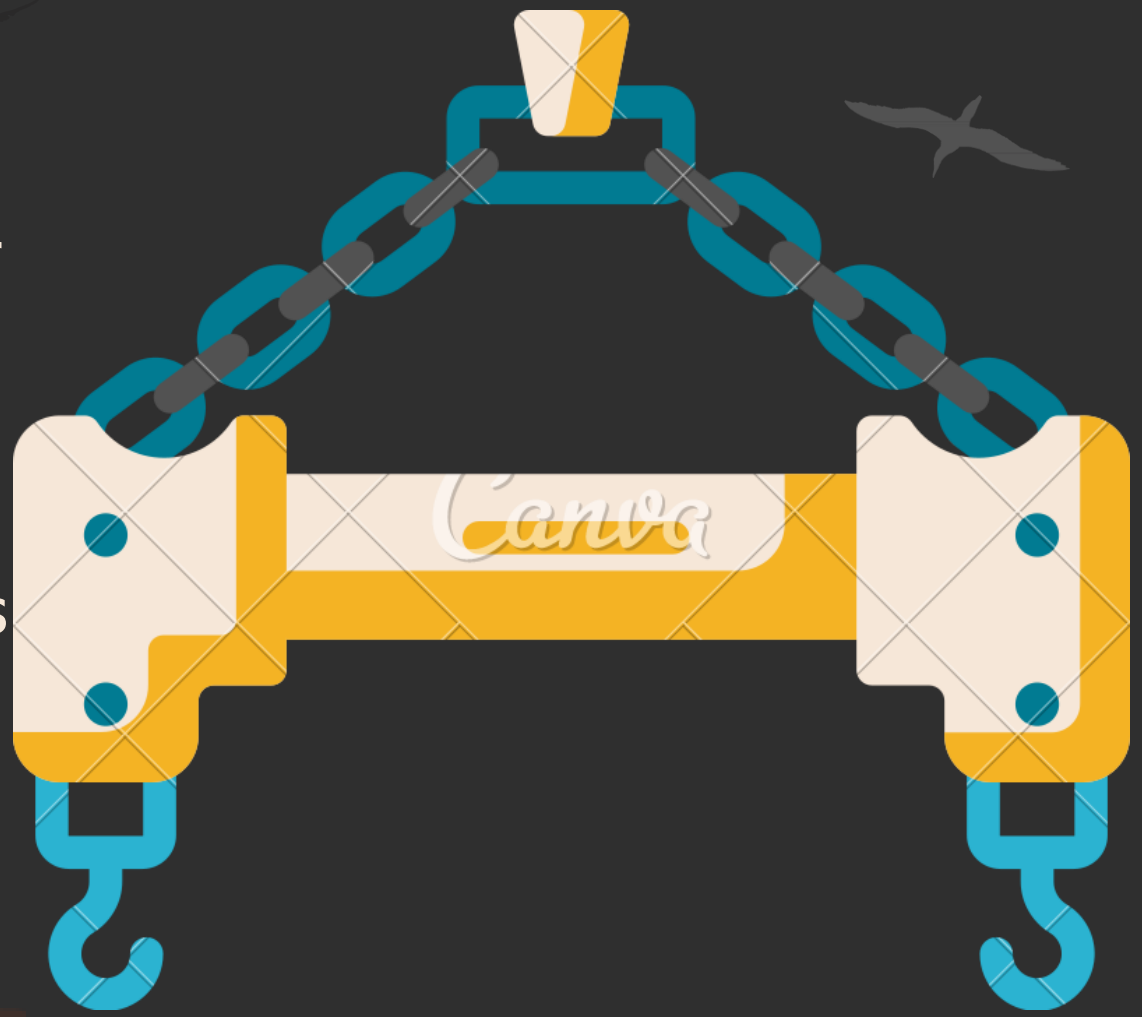

Rigging Hook & Shackle

Connects chains, ropes, slings, and other rigging equipment to prevent them from slipping

Wire Rope

Supports the shape of the load during the lifting process

Slings

A flexible, lightweight tool used with wire ropes to lift heavy loads

Pulley & Block

Provide adequate support while reducing the force required to lift the load

Eye Bolt

Acts as an anchor point and loops cables in rigging applications

Steel Nut

Works with the eye bolts in anchoring a rigging system

Turnbuckles

Adjusts the length or tension on a cable, chain, rope, and other tensioned rigging equipment

Spreader Bar & Lifting Beam

Stabilize the weight of the load for a more manageable lift

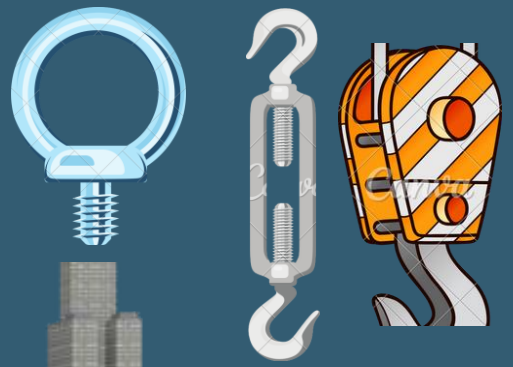

A gantry crane is an overhead crane that has one or two beams supported by freestanding legs and moves on wheels. Gantry cranes can be divided into single and double girders where single girder refers to smaller lifting applications while double girder designs are used for high capacity and higher levels of working. The greater capacity and increased work performance of double girder designs makes them more expensive. They provide an efficient and economical means for lifting and moving, materials, and tools of any size or weight.

Full gantry crane systems
Consisting of two legs that ride on rail that is embedded flush with the top surface of the floor.

Semi gantry crane system
Gantry cranes can also be designed with one leg riding on wheels or rails and the other side of the crane riding on a runway system connected to building columns or a side wall of the building structure.

TYPES OF CRANES

ISHPREET KAUR

CRN-2014112

URN-2104029

There are two main categories of cranes: **static cranes and mobile cranes**.

A static crane is a permanent/semi-permanent structure fixed to the ground or building that lifts and moves loads along a fixed path.

A mobile crane is mounted on treads or wheels and can be moved from job site to job site.

TYPES OF CRANES:-

STATIC CRANES:- Static cranes are of three types:-

- Overhead Cranes.
- Tower Cranes.
- Level-luffing Cranes.

MOBILE CRANES:- There are six types of mobile cranes:-

- Crawler Cranes.
- Wrecking Ball crane
- Rough Terrain Cranes.
- All- Terrain Cranes
- Truck Cranes.
- Carry Deck Cranes.

OVERHEAD CRANE

An overhead crane is a machine, or piece of equipment, that allows you to lift and move heavy materials from one location to another in a precise manner. The overhead crane is a small light lifting equipment, with the lifting capacity range from 1 to 16 tons, equipped with dual-speed electric hoist, which is widely used in the factory, warehouse, stockyard, etc.

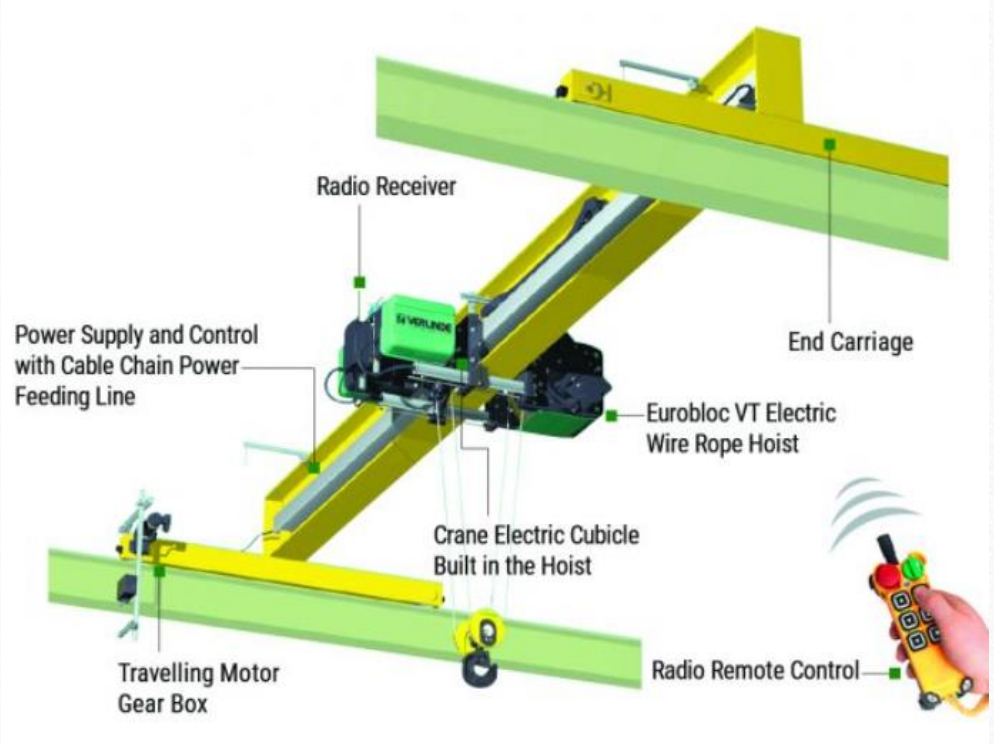

TOWER CRANE

Tower cranes are essential for moving heavy goods, materials or tools around a site. Tower cranes are impressive feats of engineering, soaring up to 265 ft tall and lifting up to 19.8 tons.

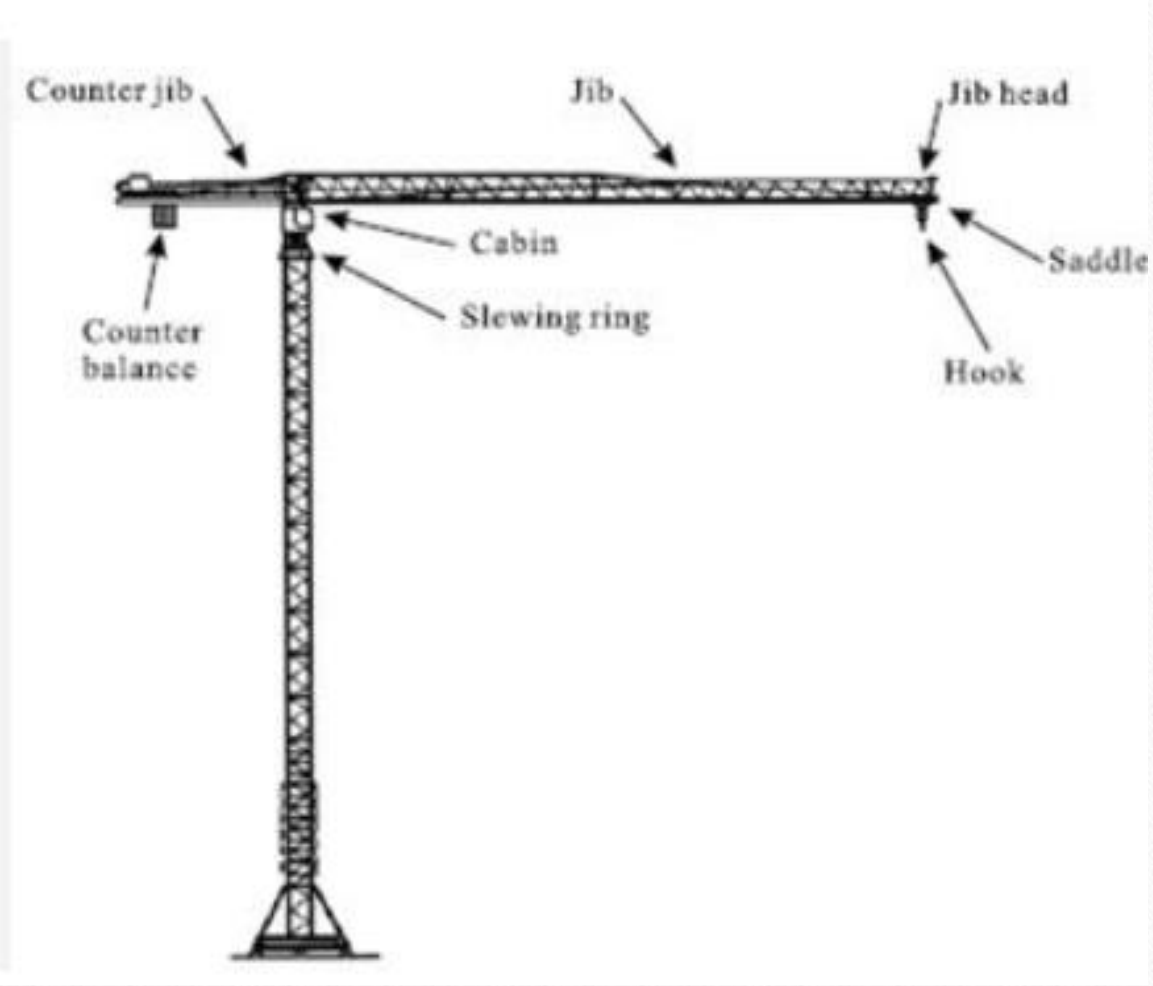

LEVEL- LUFFING CRANE

A level-luffing crane is a crane mechanism where the hook remains at the same level while luffing: moving the jib up and down, so as to move the hook inwards and outwards relative to the base. Used for freight loading in ports, level-luffing cranes are also used in the construction of small to medium-sized ships. The maximum jib reach is approximately 230 feet, and the maximum weight it can lift is 19.8 tons, or 18 metric tons.

MOBILE CRANES

MANDEEP KAUR

CRN-2014129

URN-2104037

CRAWLER CRANES

Crawler cranes are cranes mounted on an undercarriage with a set of tracks, or crawlers, that provide stability and mobility. Crawler cranes range in lifting capacity up to 660 tons. Crawler cranes make short work of the toughest jobs.

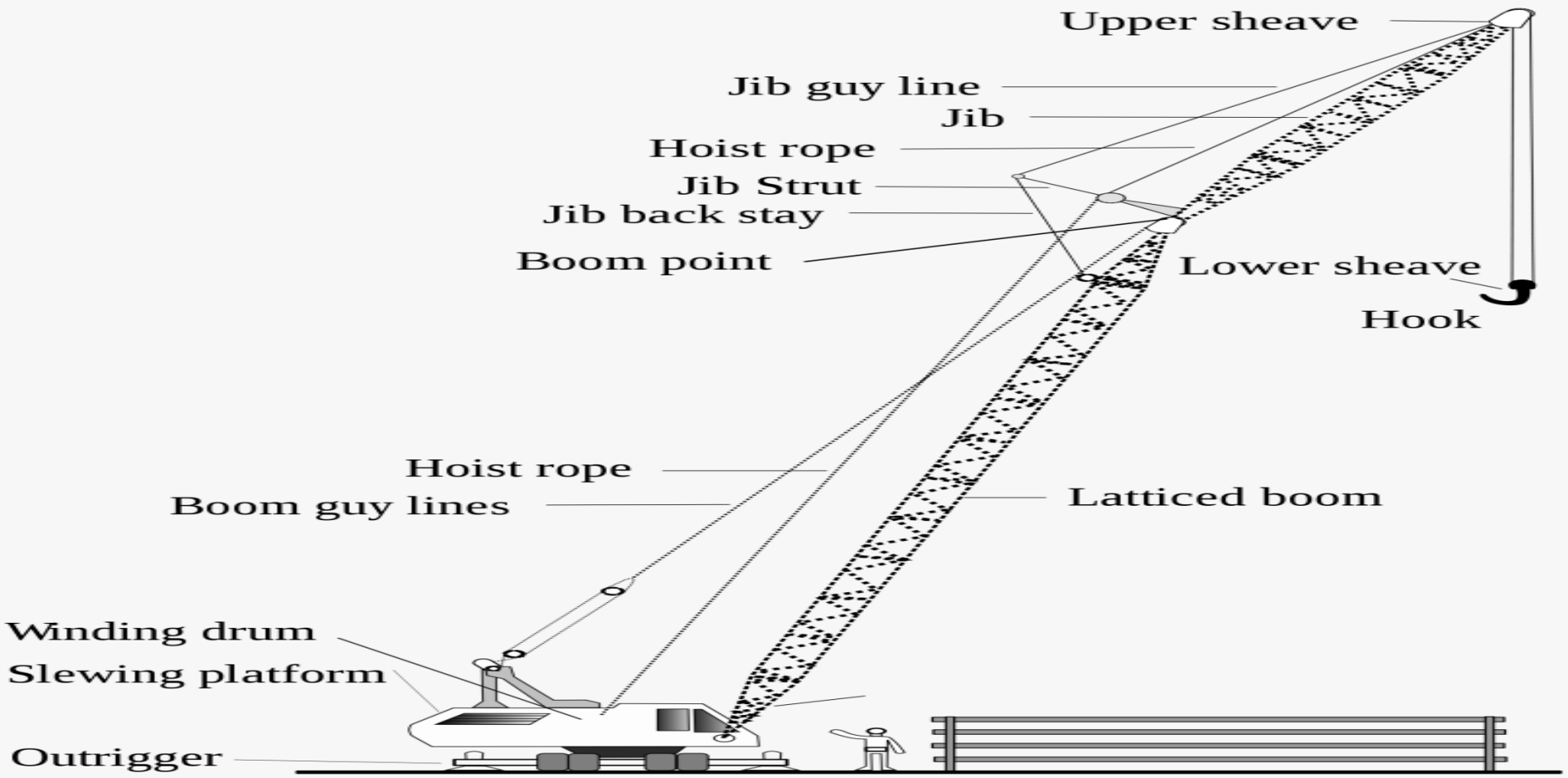
Upper sheave
Jib guy line
Jib
Hoist rope
Jib Strut
Jib back stay
Boom point
Lower sheave
Hook
Hoist rope
Boom guy lines
Latticed boom
Winding drum
Slewing platform
Outrigger

WRECKING BALL CRANE

A **wrecking ball** is a heavy steel ball, usually hung from a crane, that is used for demolishing large buildings. Wrecking balls range from about 1,000 pounds (450 kg) to around 12,000 pounds (5,400 kg). The ball is made from forged steel, which means the steel is not cast into a mold in a molten state; rather, it is formed under very high pressure while the steel is red hot (soft but not molten) to compress and to strengthen it.

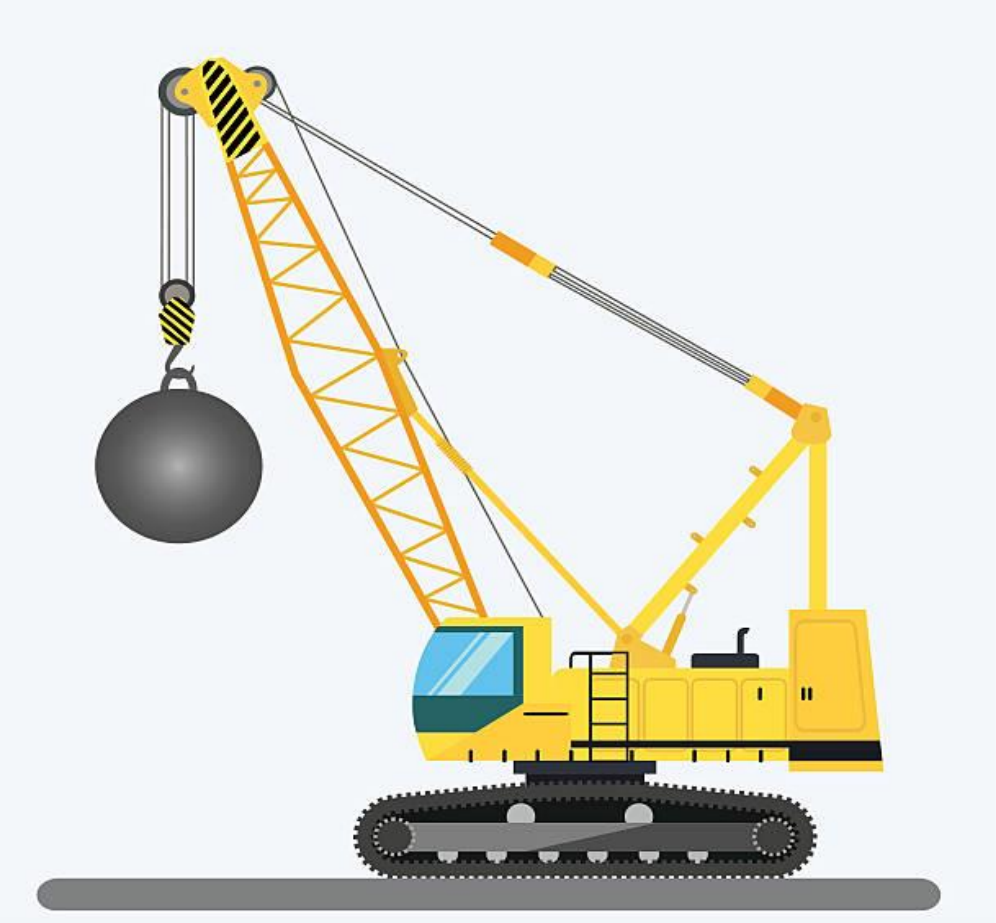

ROUGH TERRAIN CRANES

Rough terrain cranes are used for all types of off-road applications and rugged terrain conditions. The primary benefit of a rough terrain crane is its ability to maneuver through and over unfavorable terrain and obstacles while carrying a load. The load capacity for most rough terrain crane manufacturers ranges from 30 to 165 tons.

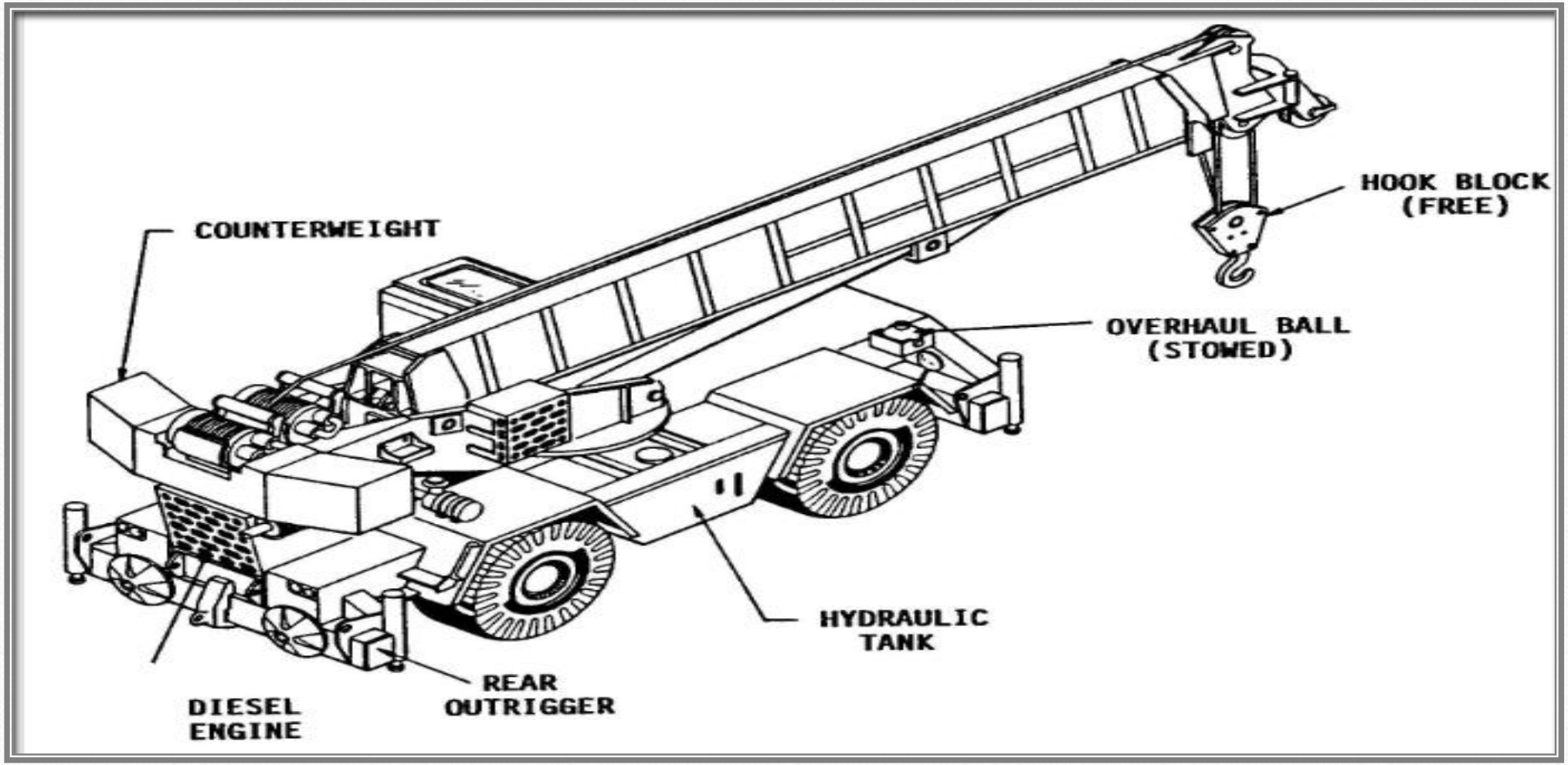
COUNTERWEIGHT
HOOK BLOCK
(FREE)
OVERHAUL BALL
(STOWED)
HYDRAULIC
TANK
REAR
OUTRIGGER
DIESEL
ENGINE

ALL TERRAIN CRANES

They are commonly used for the installation of oil and gas pipelines, the erection of wind turbines, the lifting of heavy pre-cast concrete building segments and other construction and heavy haulage applications. All-terrain cranes can carry loads that range from 40 to 1000 tons. Their reach can span from 30 to 500 feet.

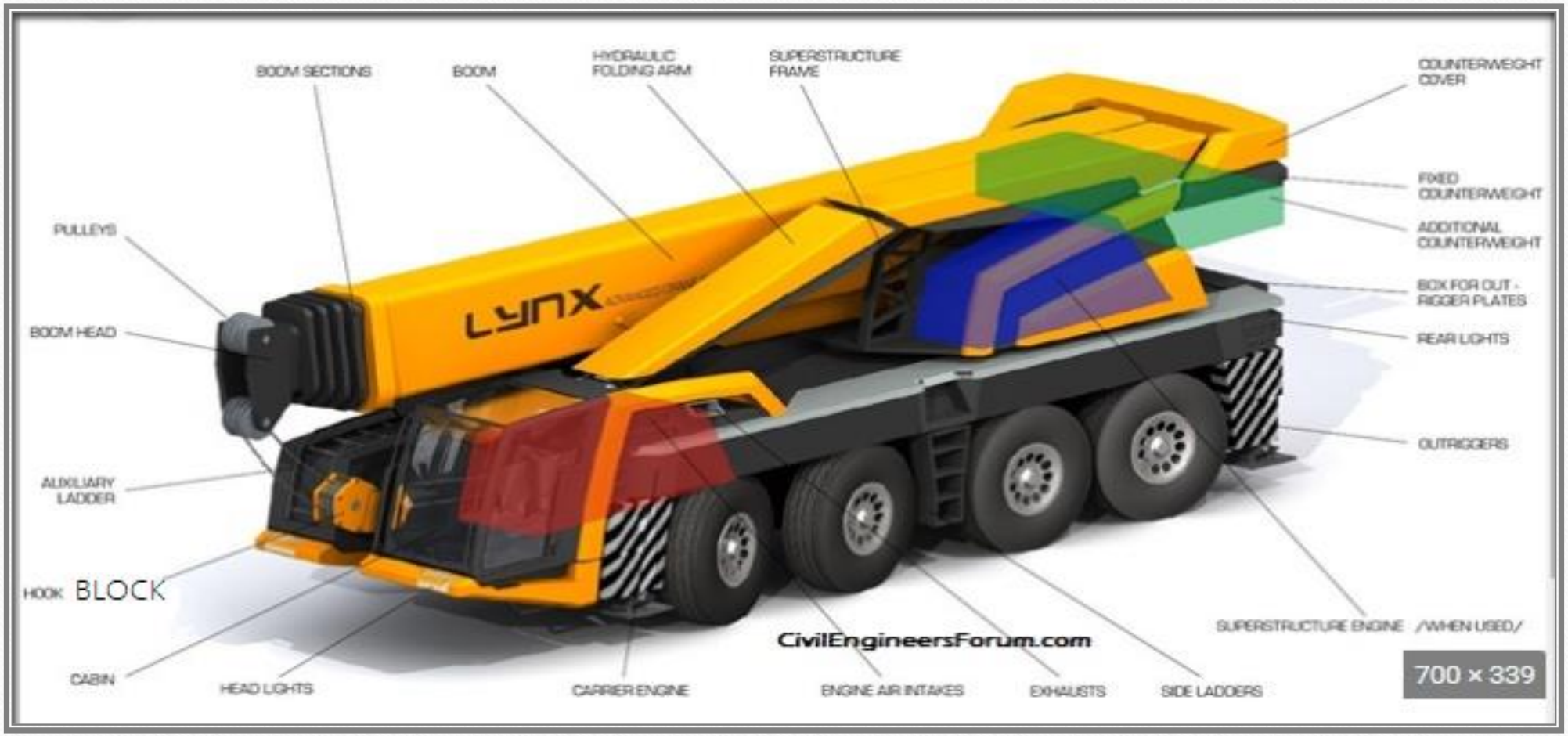
BOOM SECTIONS
BOOM
HYDRAULIC FOLDING ARM
SUPERSTRUCTURE FRAME
COUNTERWEIGHT COVER
FIXED COUNTERWEIGHT
ADDITIONAL COUNTERWEIGHT
BOX FOR OUT - RIGGER PLATES
REAR LIGHTS
OUTRIGGERS
PULLEYS
BOOM HEAD
AUXILIARY LADDER
HOOK BLOCK
CABIN
HEAD LIGHTS
CARRIER ENGINE
ENGINE AIR INTAKES
EXHAUSTS
SIDE LADDERS
SUPERSTRUCTURE ENGINE /WHEN USED/
LYNX
CivilEngineersForum.com
700 × 339

TRUCK CRANES

A crane truck, also called a boom truck, is a transport vehicle that has a crane built into its structure that helps load and unload large goods. This means no complementary machinery is needed to fulfill these functions. This type of vehicle not only transports items; it can also lift them to significant heights. Medium-sized crane trucks normally have a capacity of 15-20 tons and are more commonly used in construction and heavy industrial work.

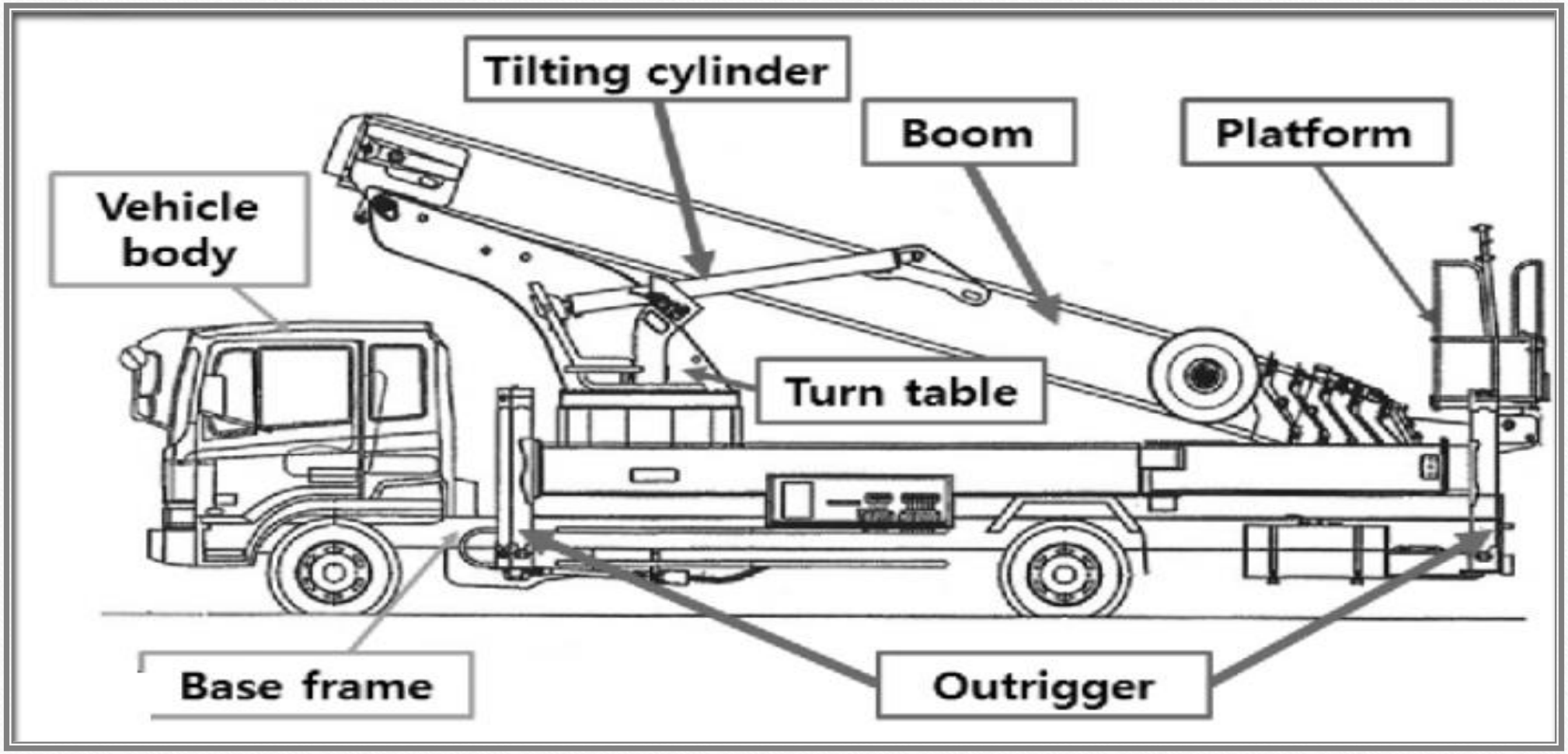
Tilting cylinder
Boom
Platform
Vehicle body
Turn table
Base frame
Outrigger

CARRY DECK CRANES

These machines are used to transport materials around job sites. Due to the smaller stature of the carry deck crane, they can easily hoist large amounts of materials in confined spaces. Such materials can be loaded directly onto the crane deck and moved to another location on the job site. Load capacity for carry deck cranes varies. The lifting capacity for the cranes ranges from 7.5-15 tons, depending on the model.

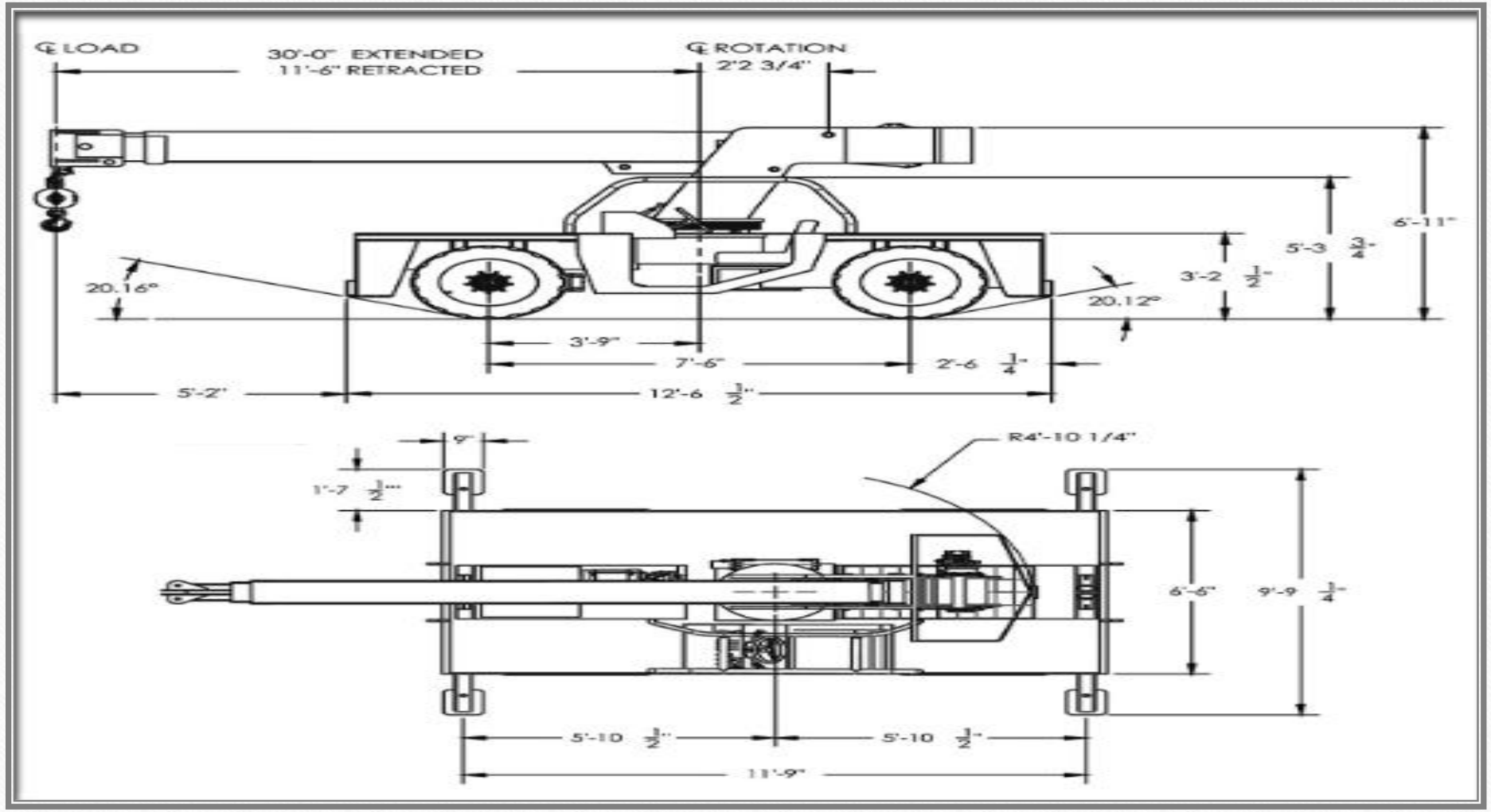
℄ LOAD
30'-0" EXTENDED
11'-6" RETRACTED
℄ ROTATION
2'2 3/4"
6'-11"
5'-3 3/4"
3'-2 1/2"
20.16°
20.12°
3'-9"
7'-6"
2'-6 1/4"
5'-2"
12'-6 1/2"
9"
1'-7 1/2"
R4'-10 1/4"
6'-6"
9'-9 1/4"
5'-10 1/2"
5'-10 1/2"
11'-9"

QUESTIONS:-

- What are types of aerial work platforms?
- What are rigging equipments ?
- How many equipments are there for erection works? Name any four.
- Name all the mobile cranes.
- What is the other name of truck crane?

Thank you