General Tolerance+/-0.05
Depth of Thread 0/+2
Depth of Hole 0/+2
Depth of Bore 0/+0.5
Radius +/-0.2
Angle +/-0.5°
Surface Texturu acc. ISO 1302
Form and Positional Tolerances acc.to ISO 1101
Unlabeled chamfer 1x45°
Unlabeled Radius R8 +/-0.2
Material : 45#

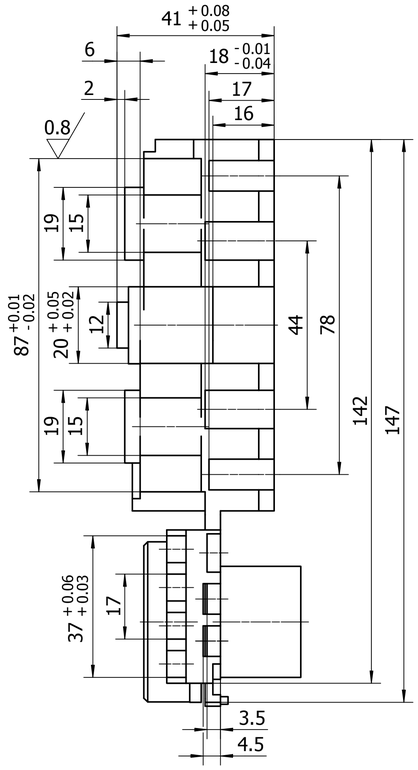

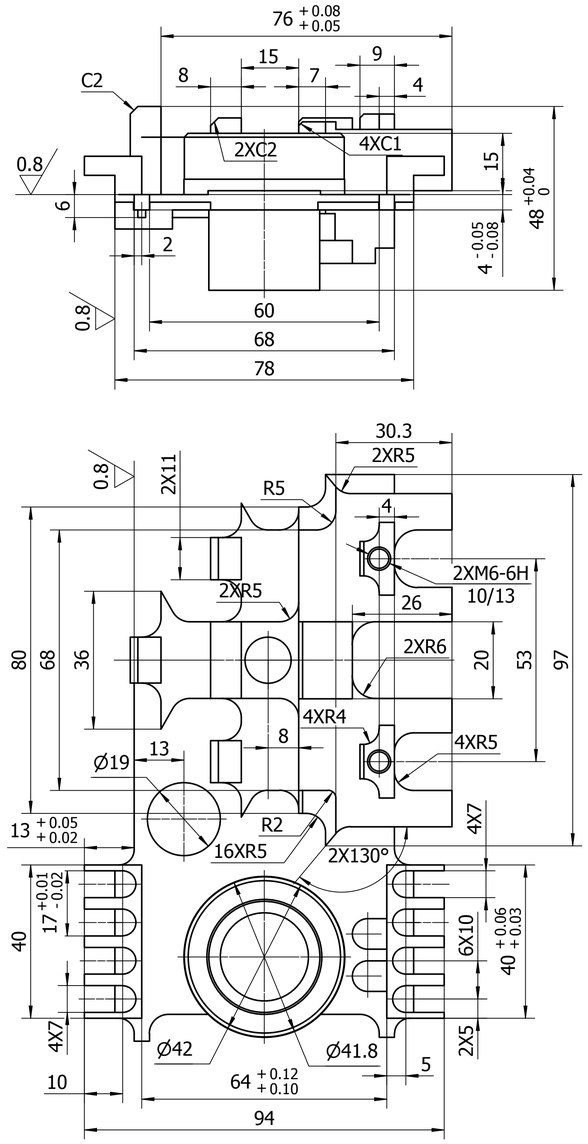

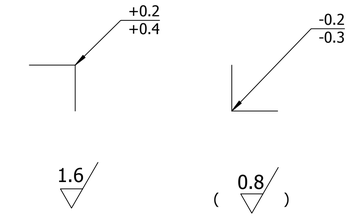

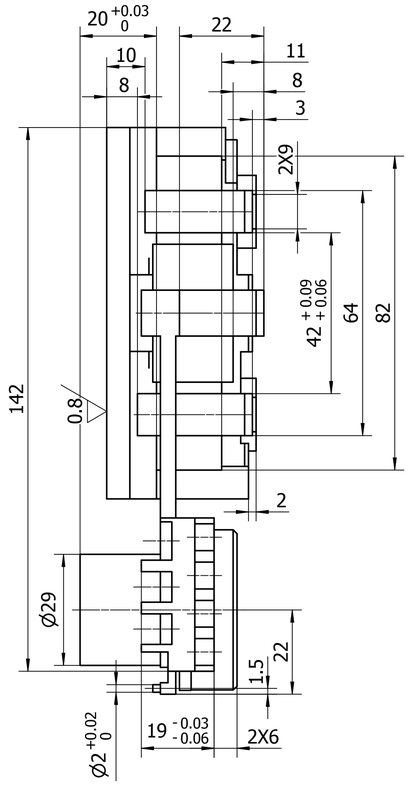

B-B

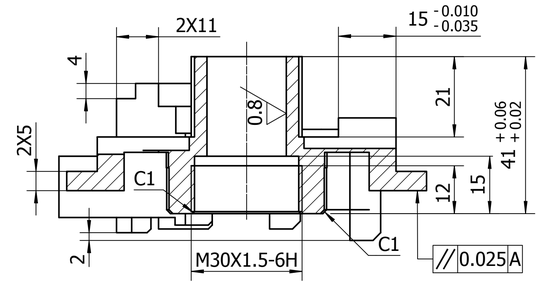

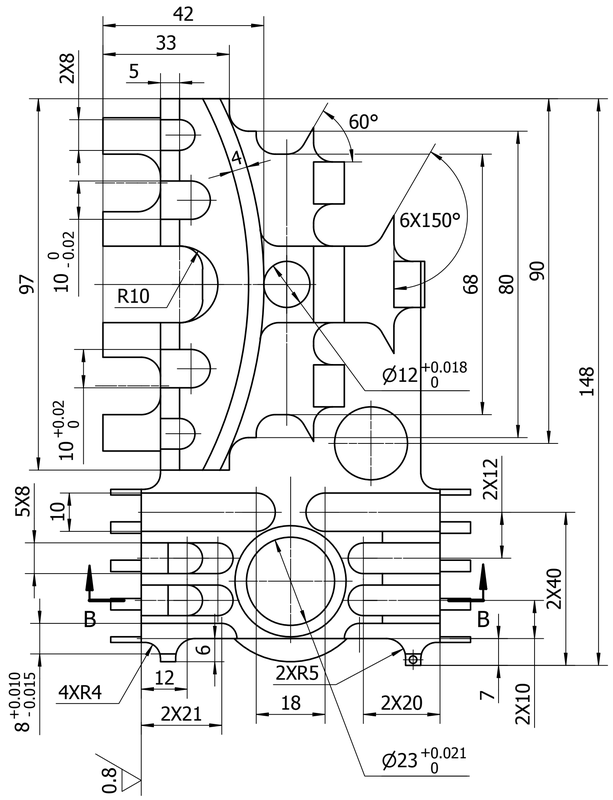

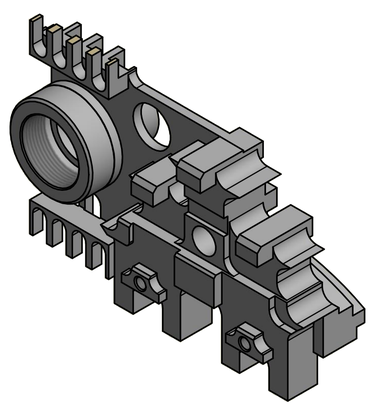

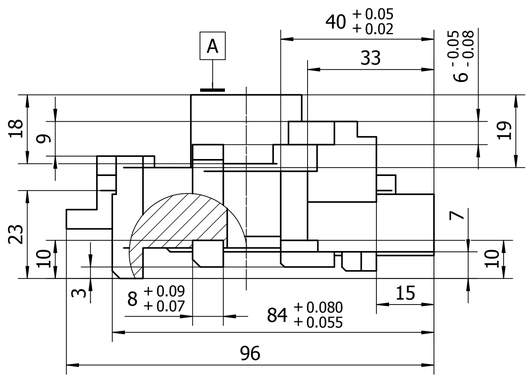

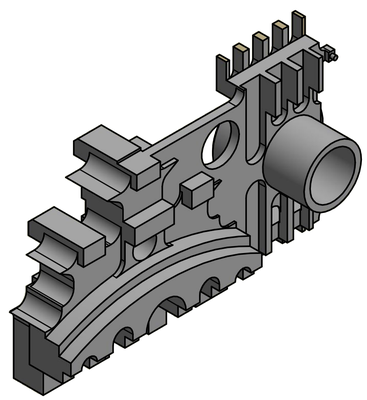

For China Team Training Only

Test Project for the 45 WorldSkills
Competition in Leipzig,Germang 2018.
Copyright 2011 Woridskills international.
All Rights Reserved.

Skill: CNC MILLING			ISO E
Scale: 1 : 1	Date:	Paper:	
Drawn / Design by:			Drawing No:
Description: MODULE 2			Rev: / Page: