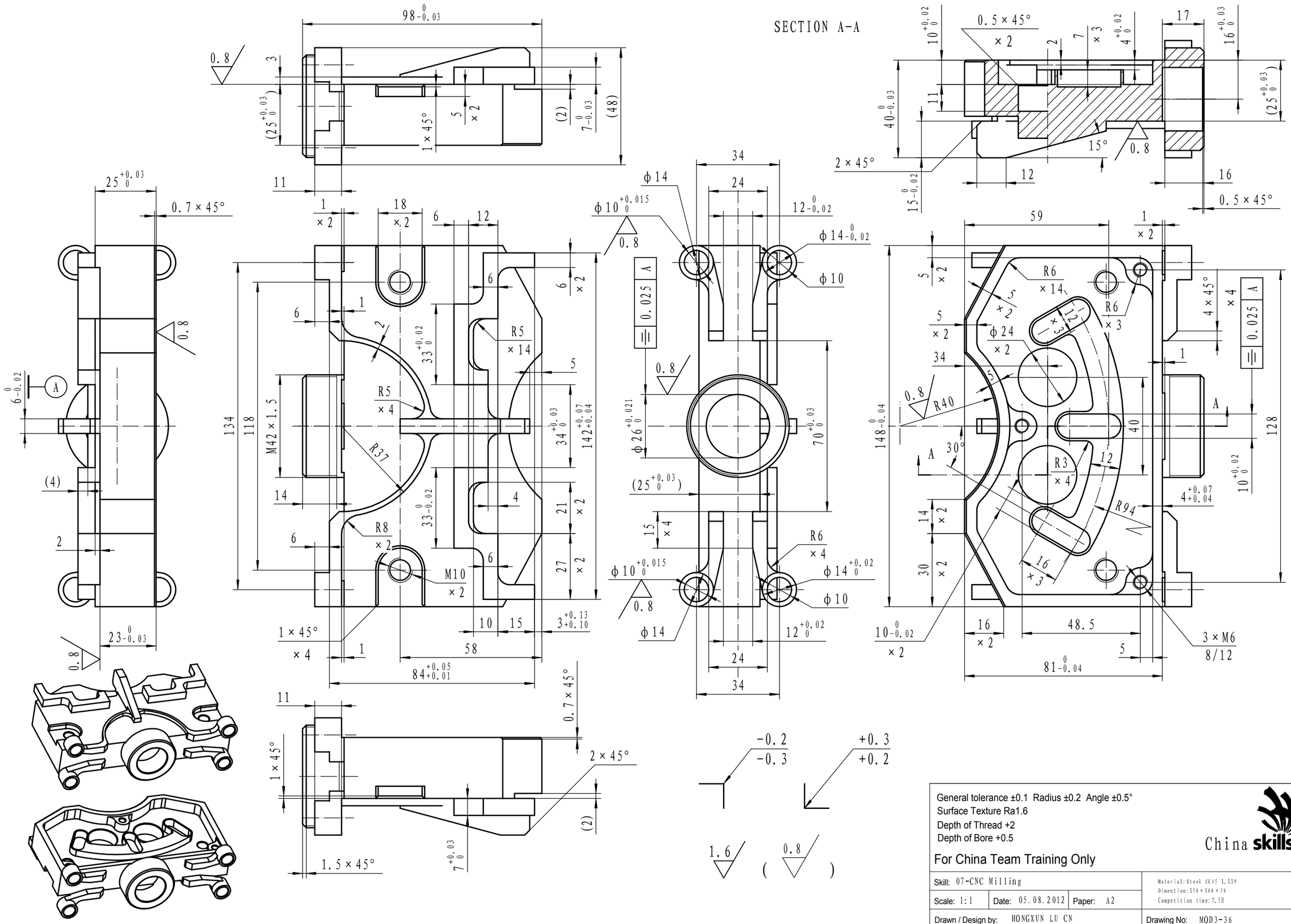
SECTION A-A
General tolerance ±0.1 Radius ±0.2 Angle ±0.5°
Surface Texture Ra1.6
Depth of Thread +2
Depth of Bore +0.5
For China Team Training Only
China skills
Skill: 07-CNC Milling
Scale: 1:1
Date: 05.08.2012
Paper: A2
Material: Steel CK45 1.119
Dimention: 150×100×50
Competition time: 7.5H
Drawn / Design by: HONGXUN LU CN
Drawing No: MOD3-36
Description: Module 3
Rev: 00
Page: 1/1