Gener Tolderance +/-0.04

Depth of Thread 0/+2

Depth of Hole 0/+2

Depth of Bore 0/+0.5

Radius +/-0.2

Angle +/-0.5°

Surface Textum acc.ISO 1302

Form and Positional Tolerances acc.to ISO 1101

Unlabeled chamfer 1x45°

Unlabeled Radius R4+/-0.2

Material:Steel 6061

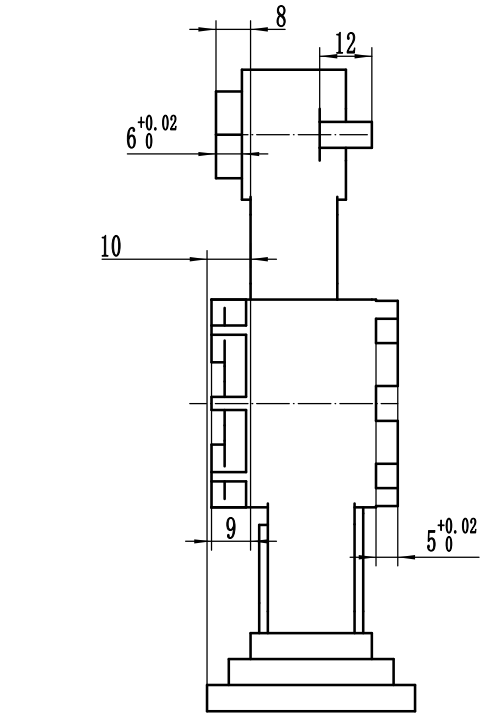

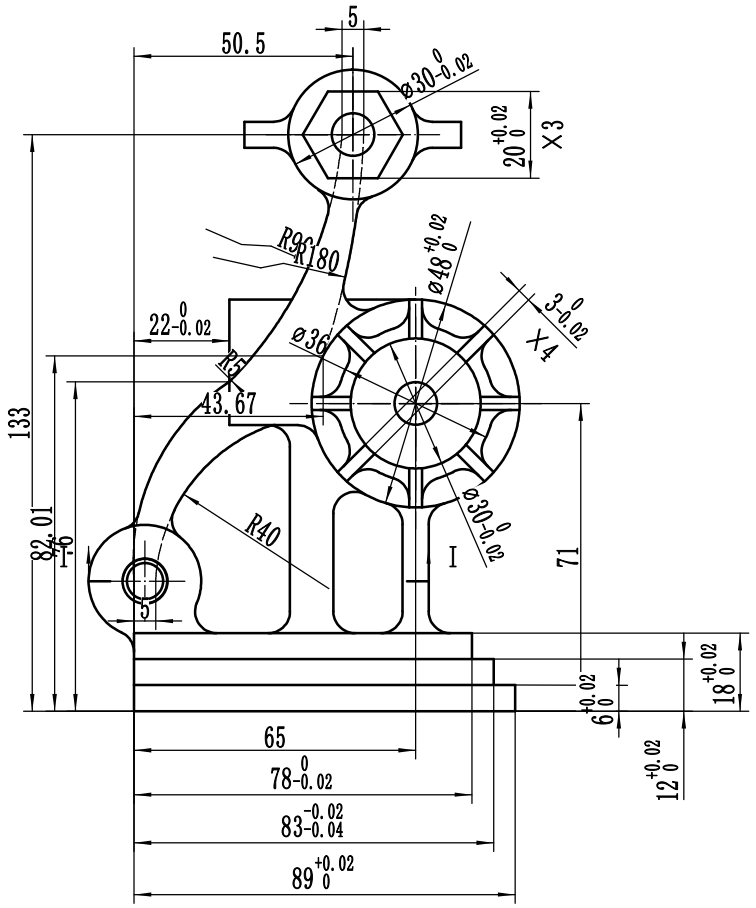

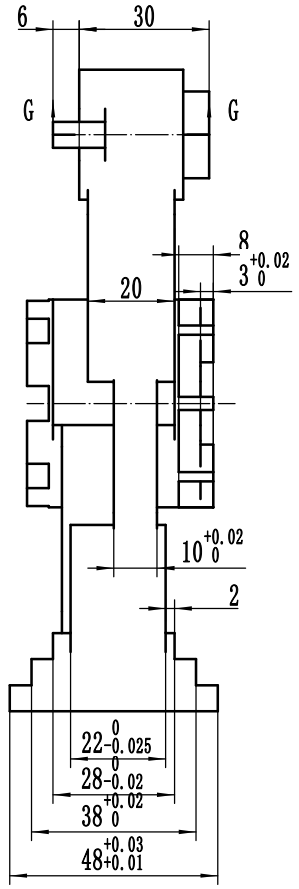

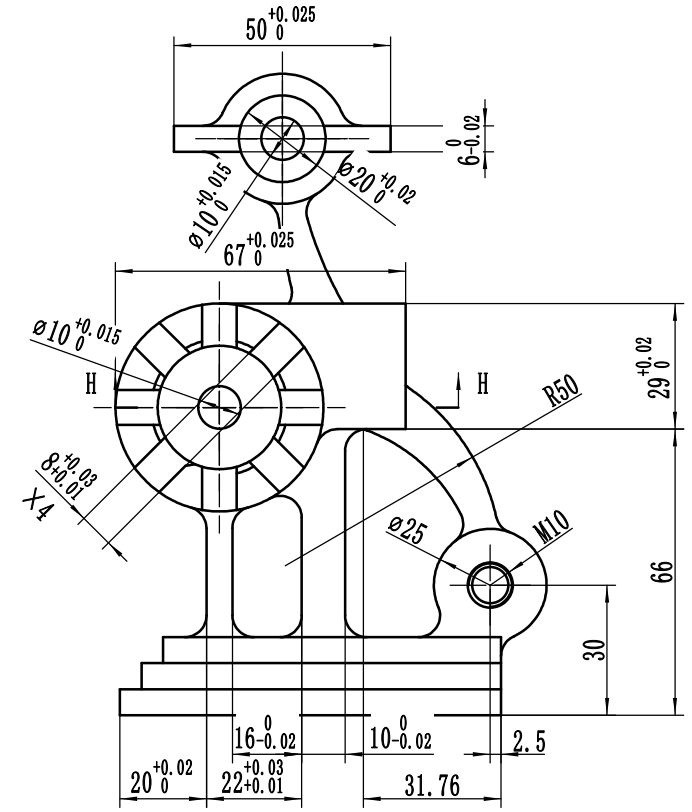

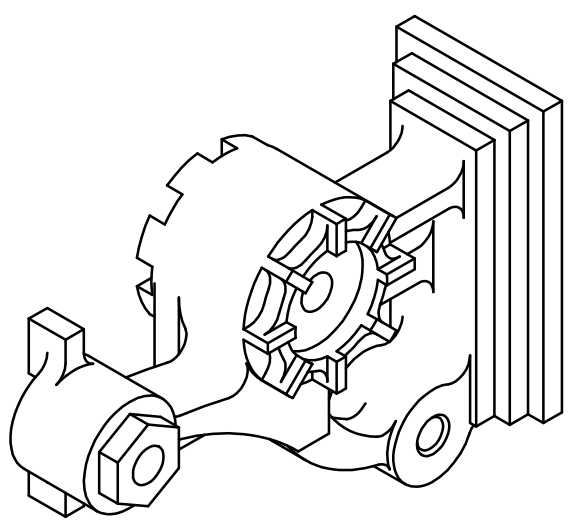

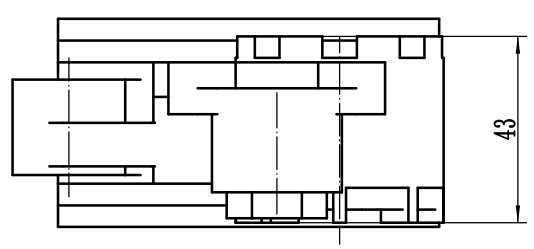

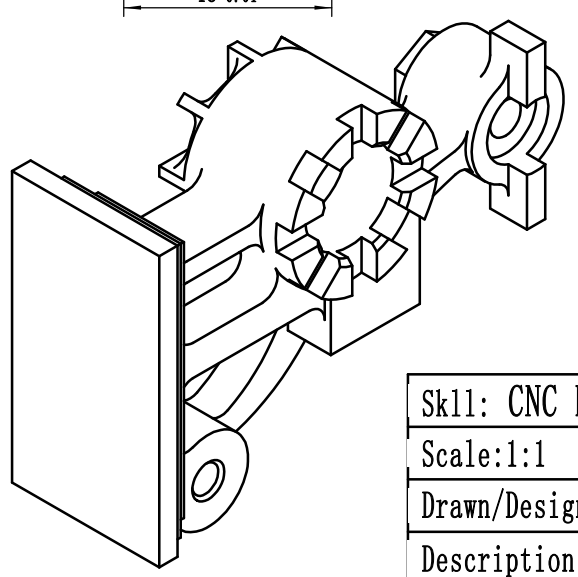

Skll: CNC MILLING			ISO E
Scale:1:1	Date:07/2018	Paper:A2	
Drawn/Design by			Drawing No: MOD-1
Description:MODULE			Rebv: Page: