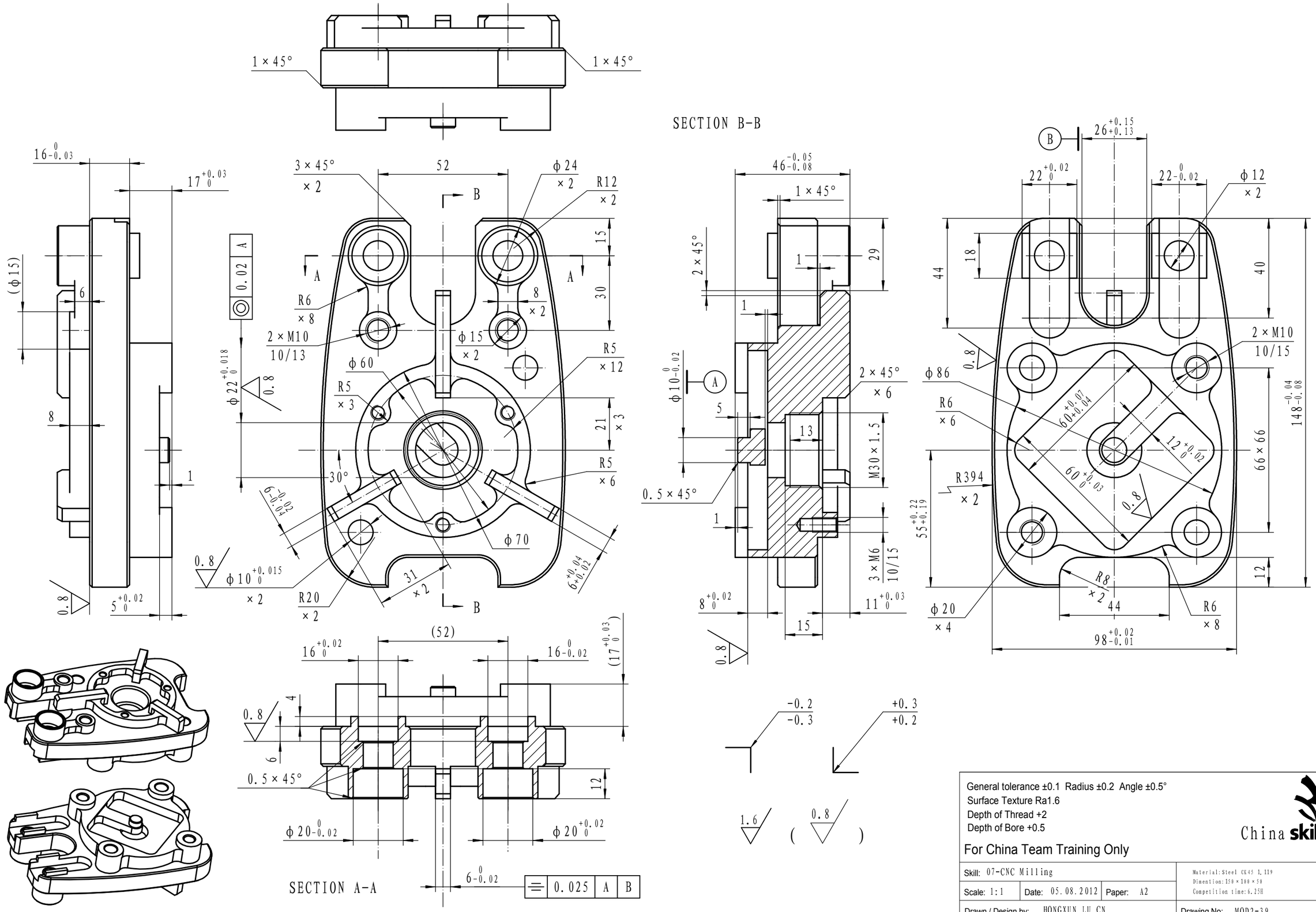

General tolerance ±0.1 Radius ±0.2 Angle ±0.5°
Surface Texture Ra1.6
Depth of Thread +2
Depth of Bore +0.5

For China Team Training Only

China skills

Skill: 07-CNC Milling			Material: Steel CK45 1.119 Dimention: 150 × 100 × 50 Competition time: 6.25H
Scale: 1:1	Date: 05.08.2012	Paper: A2	
Drawn / Design by: HONGXUN LU CN			Drawing No: MOD2-39
Description: Module 2			Rev: 00 / Page: 1/1