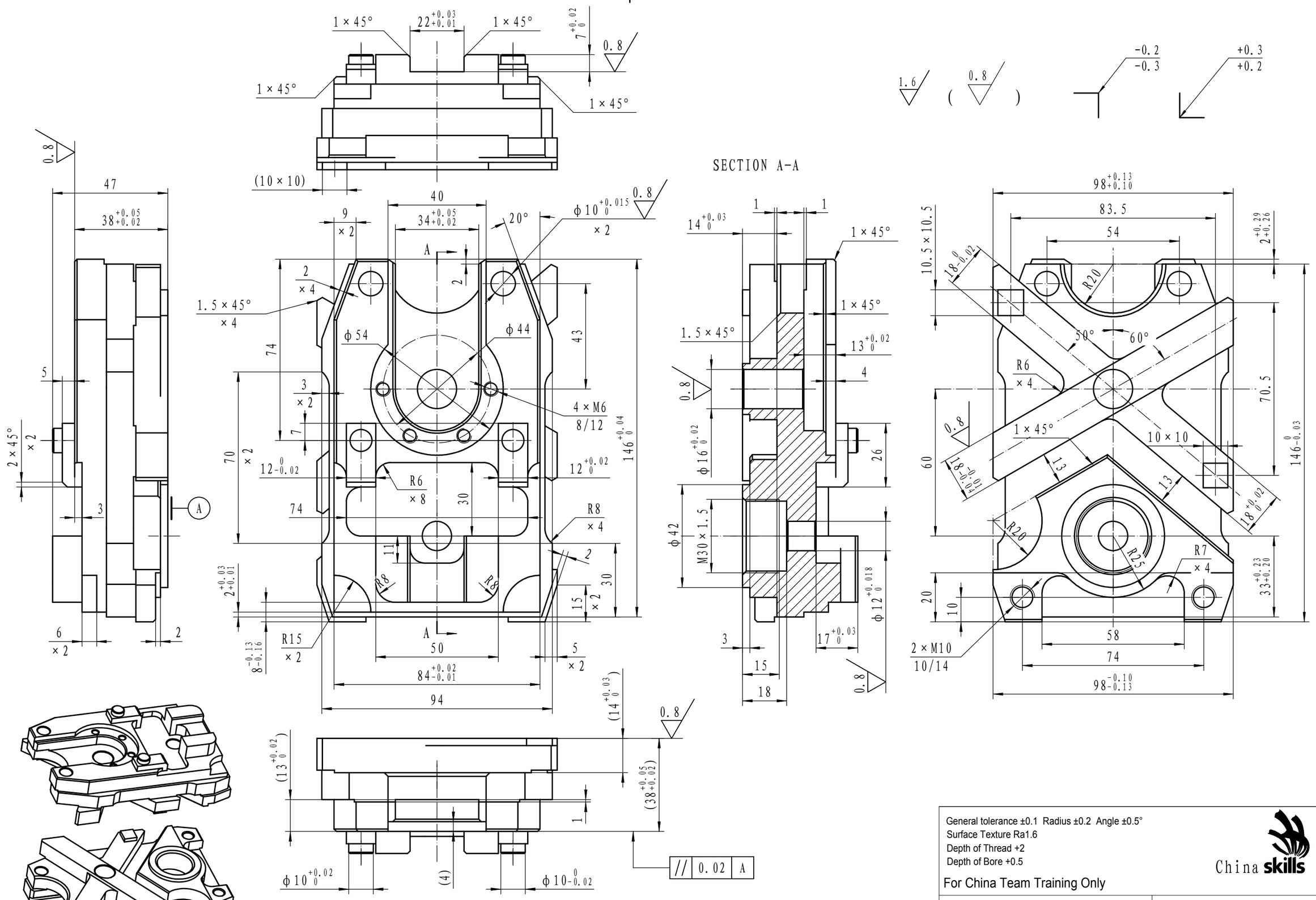


General tolerance ±0.1 Radius ±0.2 Angle ±0.5°
Surface Texture Ra1.6
Depth of Thread +2
Depth of Bore +0.5

For China Team Training Only

China skills

| | | | |
|---|---|---|---|
| Skill: 07-CNC Milling | | | Material: Steel CK45 1.119<br>Dimention: 150 × 100 × 50<br>Competition time: 6.25H |
| Scale: 1:1 | Date: 05.08.2012 | Paper: A2 | |
| Drawn / Design by: HONGXUN LU CN | | | Drawing No: MOD2-37 |
| Description: Module 2 | | | Rev: 00 / Page: 1/1 |