REVISION HISTORY			
REV	DESCRIPTION	DATE	AUTHOR
-	INITIAL		

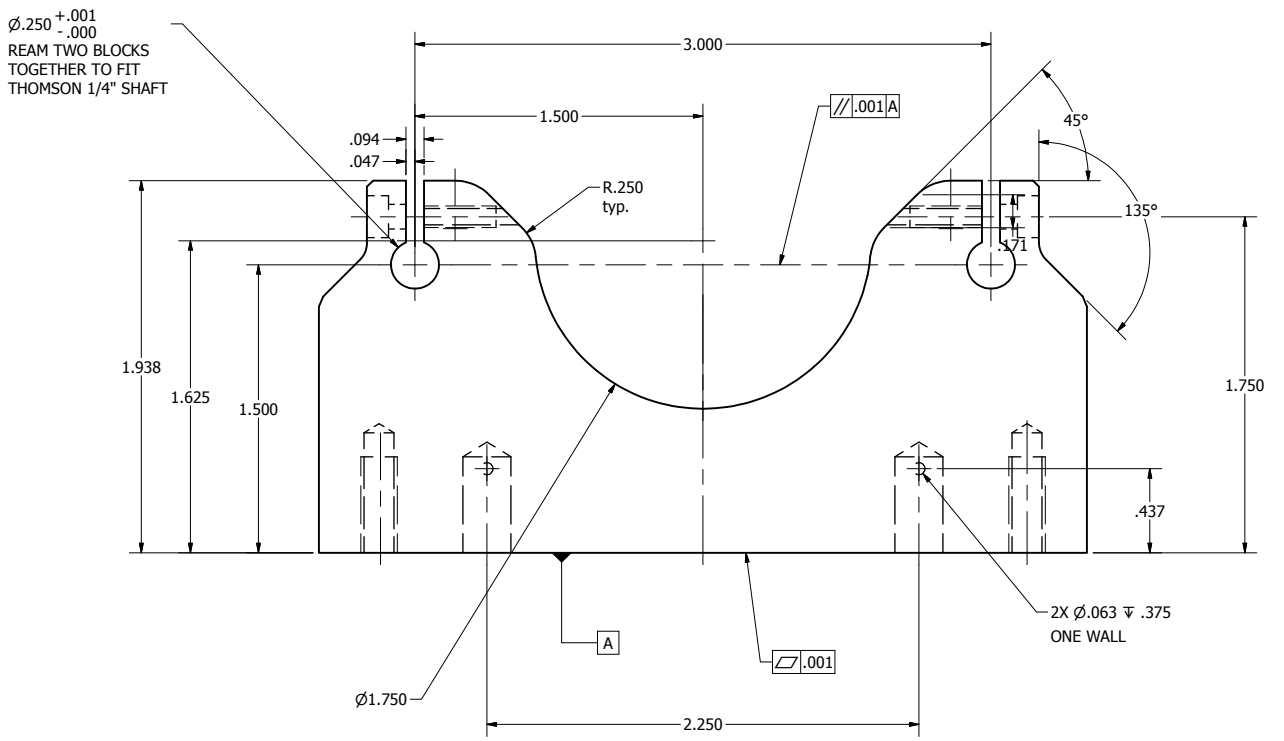

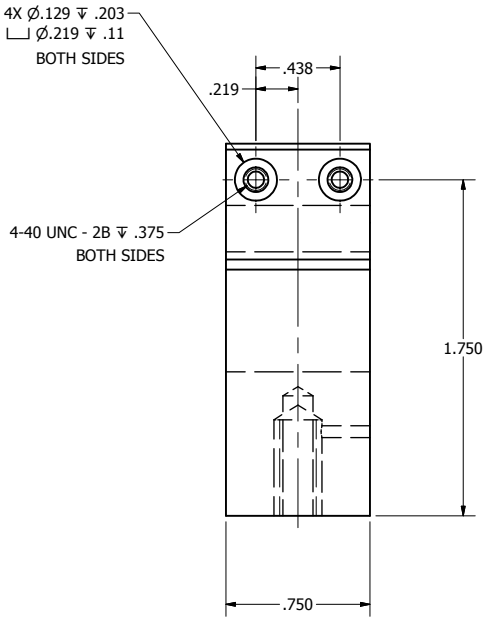

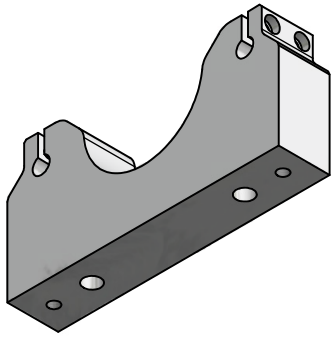

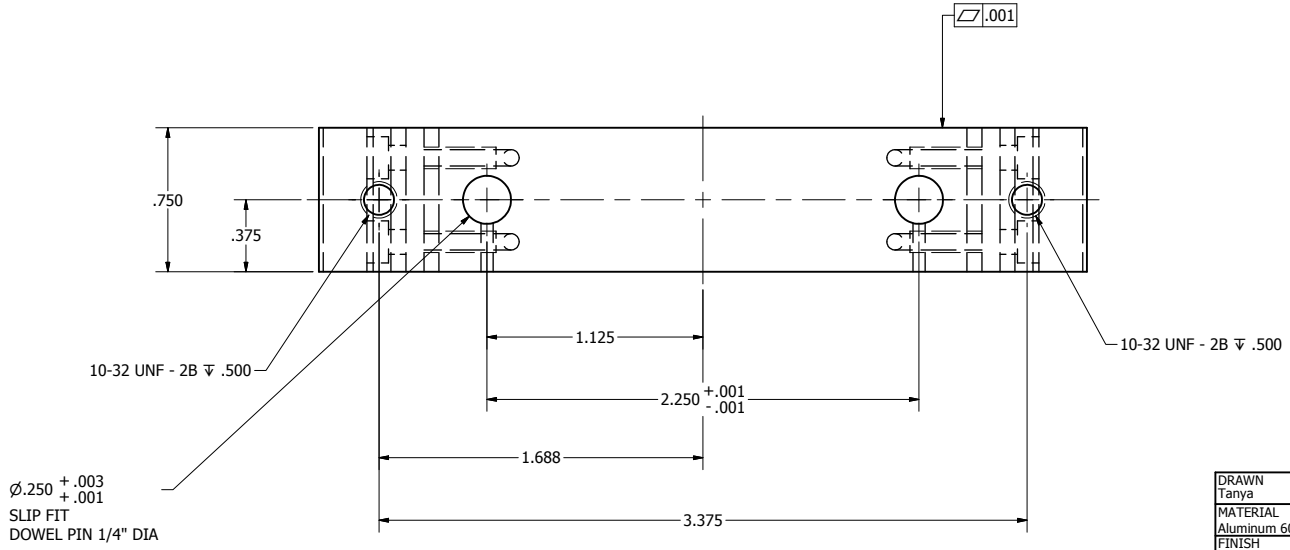

NOTES: UNLESS OTHERWISE SPECIFIED
1. INTERPRET DIMENSION AND TOLERANCES PER ASME Y14.5M-1994.
2. DEBURR AND BREAK ALL SHARP EDGES, MAX 0.010 UNLESS OTHERWISE INDICATED.
3. PARTS ARE TO BE CLEAN AND FREE OF OIL, GREASE, AND OTHER CONTAMINANTS.

TOLERANCES IN INCHES UNLESS OTHERWISE NOTED	
.X	± .03
X.XX	± .010
X.XXX	± 0.005
X.XXXX	± 0.0005
ANGULAR+/- 0.5 DEG	

DRAWN Tanya 6/26/2018
MATERIAL Aluminum 6061
FINISH NONE
SURFACE TEXTURE 32
DIMENSIONS INCLUDE CHEMICALLY APPLIED FINISHES

THIS DRAWING IS NOT TO BE USED OR REPRODUCED WITHOUT PERMISSION FROM THE HOWARD HUGHES MEDICAL INSTITUTE

THIRD ANGLE PROJECTION:

COLUMBIA | ZUCKERMAN INSTITUTE
Mortimer B. Zuckerman Mind Brain Behavior Institute

DESCRIPTION

SIZE C | PART NO SINGLE BLOCK- FRONT-A | REV

MODEL FILE SINGLE BLOCK- FRONT-A.ipt

SHEET 1 OF 1