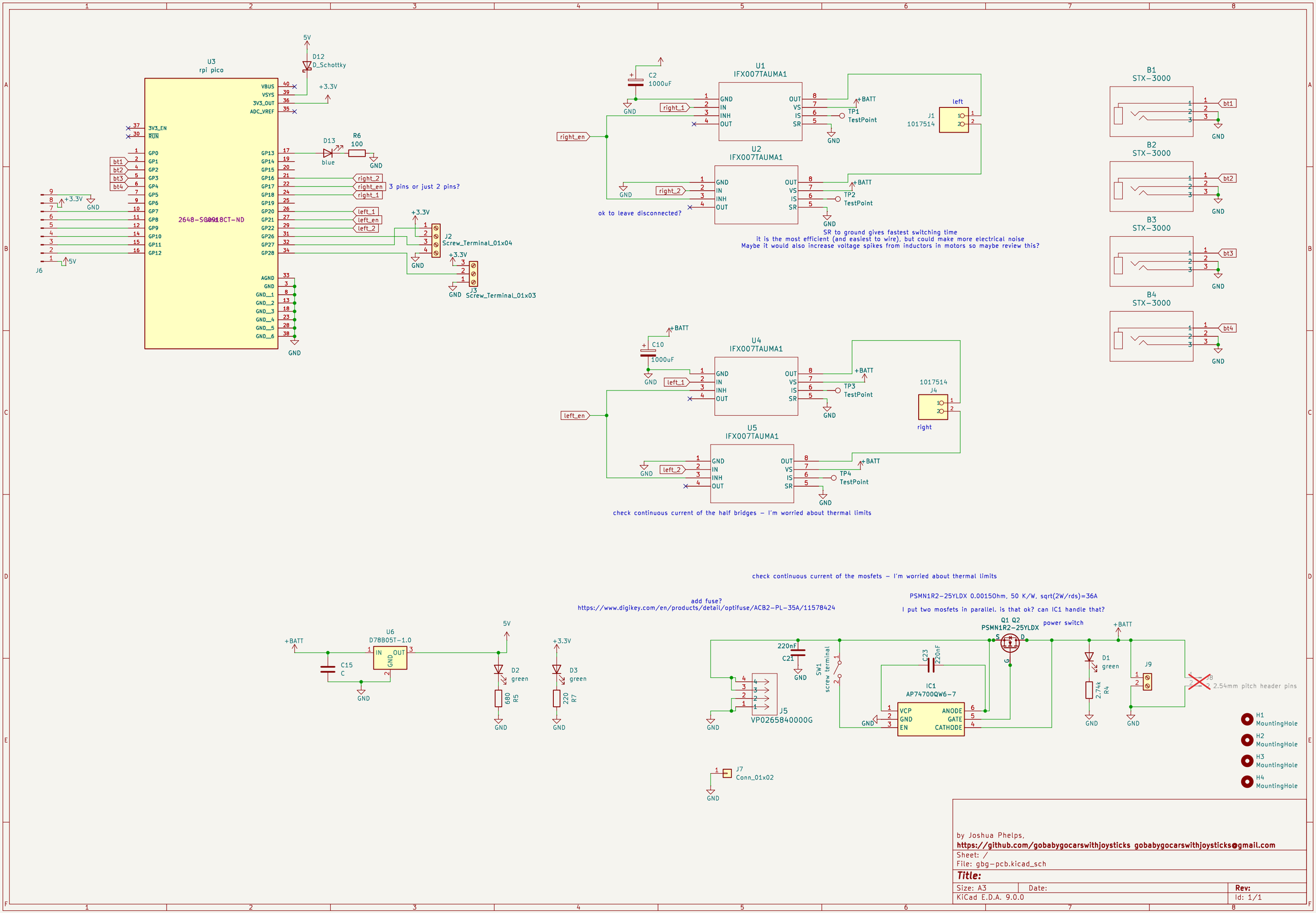

by Joshua Phelps,
https://github.com/gobabygocarswithjoysticks gobabygocarswithjoysticks@gmail.com

Sheet: /
File: gbg-pcb.kicad_sch

Title:

Size: A3	Date:	**Rev:**
KiCad E.D.A. 9.0.0		Id: 1/1