DEGREE PROJECT IN ELECTRICAL ENGINEERING,
SECOND CYCLE, 30 CREDITS
STOCKHOLM, SWEDEN 2018

Investigation for the development of a new electric control unit for customized trucks

YUSEN LIU

KTH ROYAL INSTITUTE OF TECHNOLOGY
SCHOOL OF ELECTRICAL ENGINEERING AND COMPUTER SCIENCE

KTH Electrical Engineering

Investigation for the development of a new electric control unit for customized trucks

YUSEN LIU

Master of Science Thesis in Electrical Energy Conversion
at the School of Electrical Engineering and Computer Science
KTH Royal Institute of Technology
Stockholm, Sweden, December 2018.

Supervisor: Johan Linder
Examiner: Oskar Wallmark

Investigation for the development of a new electric control unit for customized trucks
YUSEN LIU

© YUSEN LIU, 2018.

School of Electrical Engineering and Computer Science
Department of Electrical Energy Conversion
KTH Royal Institute of Technology
SE–100 44 Stockholm
Sweden

Abstract

Customized truck is a relevant and high-profit part of Scania's market. Nowadays designers do not have a self-developed electric control unit for introducing non-standard functionality. This thesis is intended to investigate the specification of a new system and an approach to implement it in current truck's electrical system. The adopted methods in this research are systems analysis, functional specification, HW & SW research and comparison and validation test of prototype system. The results obtained in this research include the potential functions and corresponding requirement specification, 5 types of hardware alternatives and 2 recommended software platform. Their feasibility is verified by a prototype system with 2 typical functions, control the motor of inward sliding door and combine the communication of different system. 3 recommended schemes and 2 directions for future research are given in the end. Based on investigation results, developers are able to know new system's specification preliminarily, understand the architectural requirements and suitable tools and materials for implementation. This research will help to improve Scania's truck's electrical system and product manufacturing in the future.

Key words: Controller area network, Customized truck, DC motor control, Electric control unit, H-bridge.

Sammanfattning

Specialfordon utgör en viktig och betydande del av Scanias produkter. Dagens designer har inte tillgång till en egenutvecklad styrenhet för att introducera icke standardiserade funktioner. Detta examensarbete fokuserar på att undersöka ett nytt system och hur det skulle implementeras i den redan existerande lastbilens elektriska system. De behandlade ämnena i arbetet är systemanalys, funktionsanalys, hårdvaruspecifikation, mjukvara samt validering och utvärdering i form av byggnation och testning av en prototyp. Resultatet som erhållits i denna rapport inkluderar potentiella funktioner och motsvarande kravspecifikation, fem typer av hårdvara och tvårekommenderade mjukvaruplattformar. Reliabiliteten av dessa valideras med en prototyp med två typiska funktioner, kontrollera en motor på en elektrisk dörr samt kombinera kommunikationen av olika system. Tre alternativa lösningar samt två alternativ till framtida studier rekommenderas i slutet av rapporten. Baserat på resultaten har utvecklare möjlighet till en preliminär specifikation, förstå krav på arkitektur, användbara verktyg och material för implementation. Denna rapport kommer att underlätta förbättring av Scanias elektriska system och utveckling i framtiden.

Nyckelord: Controller area network, DC-motorstyrning, Elektrisk styrenhet, H-brygga, Lastbil, Specialfordon.

Acknowledgements

First of all I would like to thank my supervisor Johan Linder. He trusted my ability and entrusted such an interesting and challenging project to me. He is a good mentor as well as a good friend. During all stages of the thesis, he provided excellent mentoring and supported me with constant feedback. Most importantly, he taught me how to pursuit perfection in every task I worked on.

Moreover, I want to express my gratitude to my teacher Oskar Wallmark. The knowledge he taught at lectures really intrigues me and his expert advice during the project helped me get through tough tasks. I am lucky to have a teacher like him.

I would also like to thank Levin Patrik, Olausson Mats, Österlund Henrik, Bergström Mårten, Eriksson Johan, Claesson Adam and Pålsson Martin for their extraordinary supports in this thesis process. And to all the interviewees in Scania that have participated in the research. Your help have been of great value.

Furthermore, I would like to specially thank my manager Idensjö Viveca and the whole team. You are kind and always willing to help me. It was a pleasure coming to work every day with such a lovely and engaging department. Especially, thanks to Peng Ai and Carl Günther for their friendships.

Finally, I would like to express my deepest gratitude to my family and my girl friend Nana for encouraging me to follow my passion and supporting my studies all this years.

Yusen Liu
Stockholm, Sweden
December 2018

Contents

Abstract **ii**

Sammanfattning **iii**

Acknowledgements **iv**

Contents **v**

1 Introduction **1**
1.1 Background and objectives 1
1.2 Thesis outline 1

2 Theoretical background **3**
2.1 Modularization 3
2.2 Scania trucks' electrical system 3
2.2.1 Electric control unit (ECU) 4
2.2.2 Controller Area Network (CAN bus) 5
2.2.3 System configuration 8
2.2.4 Functional development 9
2.3 Bodywork Electrical System 10
2.3.1 Truck bodybuilder 11
2.3.2 Bodywork Communication Interface 12
2.3.3 Bodywork Interface Configuration Tool 12
2.4 Development process of trucks 13
2.4.1 Ordinary development process 14
2.4.2 Customized trucks (special order) development process 14
2.4.3 Change request 15
2.4.4 Pros and cons of customized truck development process 15
2.4.5 Develop a new ECU for customized trucks 17

3 Demand analysis **18**
3.1 Former functions 18

3.2 Future functions . . . 18
3.2.1 Functions from other type of vehicles . . . 19
3.2.2 Possible functions of next generation truck . . . 20
3.3 Classification of demands . . . 22
3.4 Requirements from demands . . . 23

4 Hardware and software investigation 25
4.1 Other deigners' solution . . . 25
4.1.1 SCANIA bus/coach body . . . 25
4.1.2 Other companies or Competitors . . . 28
4.2 Research for hardware . . . 28
4.2.1 Common used ECU . . . 29
4.2.2 Distinctive ECU . . . 30
4.2.3 ECU of bus body system . . . 30
4.3 Research for software . . . 30
4.3.1 Low layer . . . 30
4.3.2 Middle layer . . . 31
4.3.3 High layer . . . 31
4.3.4 Programming platform . . . 32
4.4 Conclusion . . . 32
4.4.1 Hardware candidates . . . 32
4.4.2 Recommended software platform . . . 33

5 Prototype build and test 34
5.1 Intended functions . . . 34
5.1.1 Control the motor of inward sliding door . . . 34
5.1.2 Combine the communication of different systems . . . 35
5.2 Hardware . . . 36
5.2.1 ECU TMS . . . 36
5.2.2 Window regulator motor . . . 36
5.2.3 Coding switch . . . 37
5.2.4 H-bridge and gate driver . . . 37
5.3 Circuit diagram . . . 40
5.3.1 Control the motor of inward sliding door . . . 41
5.3.2 Combine the communication of different systems . . . 41
5.4 Software programming . . . 42
5.4.1 Setting up the platform . . . 42
5.4.2 Program flowchart . . . 42
5.5 Tests and results . . . 44
5.5.1 Control the motor of inward sliding door . . . 44
5.5.2 Combine the communication of different system . . . 46

6 Conclusions **49**
6.1 Summary of the investigation 49
6.2 Three recommended schemes and cost estimation 50
6.2.1 Participate in upgrading BICT 50
6.2.2 Develop a BWE external system 50
6.2.3 Develop a new ECU in Yellow CAN bus 51
6.2.4 Comparison 51
6.3 Suggestions for further work 52
6.3.1 Deeply understand the development process of Scania embedded system 52
6.3.2 Clear definition of desired access for the new ECU 53

A Tables of investigation results **54**

Chapter 1

Introduction

The motive behind the thesis subject is given in this first chapter together with the project goals. A summary of the report layout is also presented.

1.1 Background and objectives

Scania CV AB is a major Swedish manufacturer of commercial vehicles - specifically heavy trucks and buses. A relevant part of Scania's market is made of customized trucks, which is, trucks with components or functionalities that are not normally provided within the standard product portfolio. It can be delivered within a shorter lead time with respect to normal development.

There are several approaches to introduce non-standard functionality. Current solutions include adding separate cables and small systems or using a system available for bodybuilders (bodywork electrical system). Both approaches have significant limitations and drawbacks: with separate cables and added systems, it is impossible to communicate with existing truck electrical systems, while using a system available for bodybuilders, which has many constraints, limits the possibility for solutions. Moreover, it could be affected by the functionality added by the bodybuilders outside Scania factory.

The present thesis aims to firstly investigate the system and architectural requirements on the available system (truck) about introducing a new system. Secondly, analyze necessary or potential functions of customized trucks. Thirdly, research for the candidates of a new electric control unit. Then, a prototype is built and tested to prove the capabilities of candidates. Finally, three alternatives of solution are presented and recommendations for further work are given.

1.2 Thesis outline

This thesis report is separated in six chapters as follows:

- **Chapter 1**: Short presentation of project purpose and report structure.
- **Chapter 2**: Introduction of SCANIA trucks' electrical system, ordinary development process and current challenges for customized trucks' system development.
- **Chapter 3**: Analyze necessary or potential functions and requirements from demands for a new electric control unit of customized trucks.
- **Chapter 4**: Investigation results for competitors' solutions, hardware candidates, and appropriate software platform.
- **Chapter 5**: Verification for capabilities of candidates through a prototype system with two typical functions implemented.
- **Chapter 6**: Final conclusion of this research project, including three recommended solutions and suggestions for future work.

Chapter 2

Theoretical background

The concept of modularization in Scania especially in research and development are briefly introduced. Next, the theoretical background for Scania trucks' electrical system is presented in this chapter. The development process of a customized truck is introduced and its drawback will be analyzed at last.

2.1 Modularization

Product variety and complexity in products and systems have for the last decades been increasing, due to more and more specific customer demands as well as shorter lifetime of products [1]. A vital part to be able to handle the complexity and product variance that companies are faced with today is a modular system [2].

According to interviews held with 13 employees who come from Scania research and development's organization, modularization is the possibility to offer more with fewer parts. Due to the ability to modularize on several levels the amount of combinations is huge, which makes it possible to deliver a product that is tailor-sewed on the basis of the demands of the customer. Modularization also requires less resource, e.g. fewer parts can be managed by less administration, which requires fewer employees [3].

For example, the representative product of Scania, Scania trucks, are made up of different modular system. Truck's electrical system is a typical one. Customized truck designers are continuously looking for a better modularized solution for their growing challenges, which is a part of the background for this project and will be discussed in-depth later.

2.2 Scania trucks' electrical system

The electrical system of Scania truck is grouped into system families and system variant options. The physical architecture constitutes of the complete set of ECU- and DEC-

systems.

An Electronic Control Unit system (ECU-system) is a set of components such as sensors, actuators, cabling etc. and an ECU connected to one of the CAN-buses. Example: The coordinator ECU with the connected equipment (fuel level sensors, pedal position sensors etc) constitutes an ECU system.

A Discrete Electric Circuit system (DEC-system) is a set of components such as sensors, actuators, cabling etc. with no ECU at all or an ECU not connected to any of the CAN-buses. Example: The power supply components constitute a DEC-system. The components for the electric seat control constitute a DEC-system

2.2.1 Electric control unit (ECU)

ECU originally describes the engine control unit, refers to the electric control system of Electronic Fuel Injection engine in particular. However, with the development of automotive electronics, now it stands for any embedded system that controls one or more of the electrical systems or subsystems in a vehicle. For example, chassis management module, door control unit, visibility control unit, air conditioner control module, articulation control unit, etc. Nowadays, in modern upper class vehicles up to 2500 signals are exchanged by up to 70 ECU [4].

In simple terms, an ECU is made up with a microcomputer and its peripheral circuit. A microcomputer is a small, relatively inexpensive computer with a microprocessor as its central processing unit (CPU). It includes a microprocessor, memory, and input/output (I/O) circuitry mounted on a single printed circuit board. The main part of ECU is microcomputer and the core part is CPU.

Input circuit takes in signals, which can be analog or digital, from either sensors or other devices and transfer them to a certain voltage. The analog-to-digital converter will convert analog signals to digital and transmit them to the microcomputer. Then data of signals will be sent to the output circuit after processing by microcomputer. The data pass through amplifier or digital-to-analog converter in output circuit, finally become the control signal of components like servo motor, pneumatic valve, relay, lamp, etc. Figure 2.1 shows the sample structure of an electric control unit. It is divided into input circuit, microcomputer, output circuit, communication circuit and power circuit.

Specifically, an ECU is made up with CPU, extended Memory, extend I/O, Controller Area Network/Local Interconnect Network/ Ethernet receiver and transmitter, A/D and D/A converters, pulse Width Modulation (PWM), proportional-integral-derivative controller, voltage controlled element, watchdog timer, heat sink and other electronics. An ECU usually has a protective case, whose material depends on ECU's location on vehicle, operating environment and electromagnetic compatibility. Its programming language usually is C or generated C code e.g., Simulink. Its developing platform also needs device driver, function library, complier and simulation software.

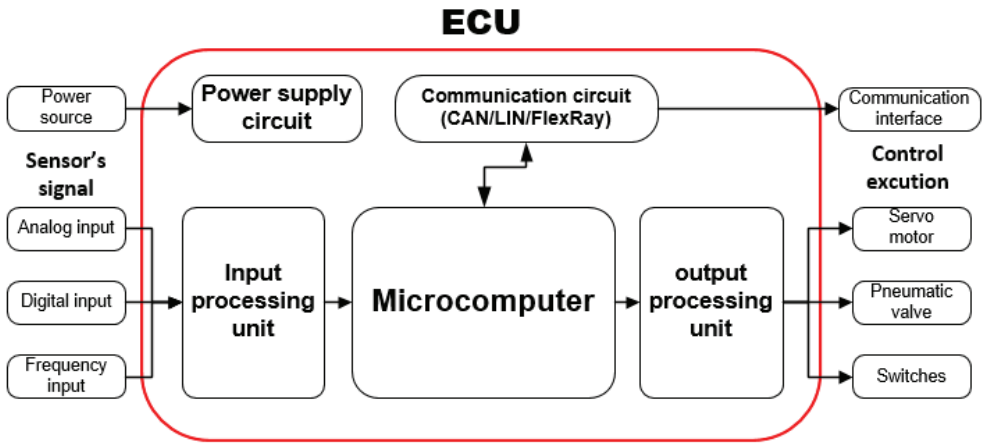

Fig. 2.1 Sample structure of the ECU.

2.2.2 Controller Area Network (CAN bus)

Controller Area Network (CAN bus) is a robust vehicle bus standard designed to allow micro-controllers and devices (e.g., ECU and sensors) to communicate with each other in applications without a host computer. It is set as a two-wire and half-duplex network which is shown in Figure 2.2 (Reproduced with permission from Scania). CAN bus was developed by Robert Bosch GmbH in the 1990s and designed originally for multiplex electrical wiring within automobiles to save on copper.

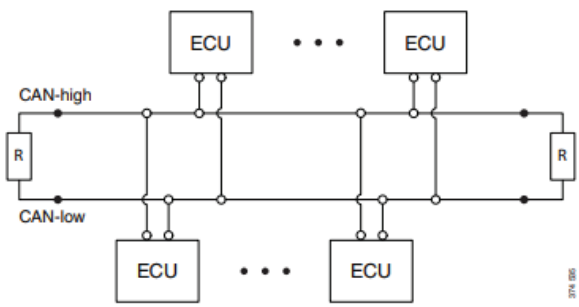

Fig. 2.2 A sample of CAN bus [5].

CAN bus, which is a serial network, has widely been used in power train control, chassis control, and body electronics applications. Car makers all over the world are heavily involved in CAN network development and adopting the network centered in body electronics [6–9]. Almost all Electronic Control Units (ECU) suppliers provide their products with CAN interface. Furthermore, because the amount of ECU increases rapidly and many new technical challenges arise, the network of automobile's electrical system

becomes more and more important. Nowadays, Bosch is still active in extending the CAN standards. In 2012, Bosch released CAN FD 1.0 or CAN with Flexible Data-Rate. This specification uses a different frame format that allows a different data length as well as optionally switching to a faster bit rate after the arbitration is decided [10].

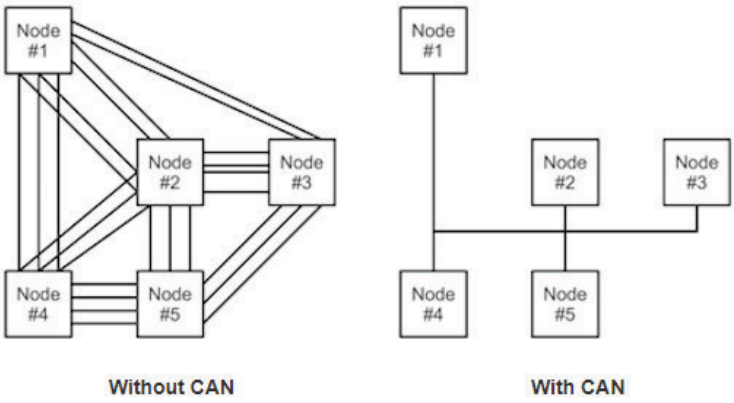

Fig. 2.3 Advantage of CAN bus [11].

As shown in the Figure 2.3 (Reproduced with permission from Tom Kelly), the greatest advantage of Controller Area Network lies in the reduced amount of wiring combined with an ingenious prevention of message collision (no data will be lost during message transmission) [11]. Even though the CAN is a low-price network, the automobile manufacturers are sometimes searching for less expensive solution. For example, Local Interconnect Network (LIN bus) is a simple but cheaper protocol [12].

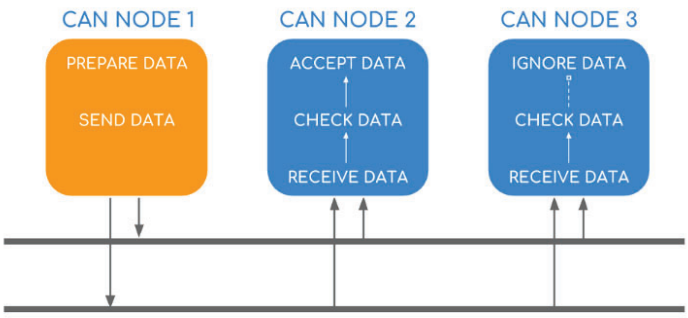

Fig. 2.4 Communication of CAN bus [13].

CAN protocol is a message-based protocol, not an address based protocol. This means that messages are not transmitted from one node to another node based on addresses. Embedded in the CAN message itself is the priority and the contents of the data being transmitted. Like Figure 2.4 (Reproduced with permission from Martin Falch)

presents, all nodes in the system receive every message transmitted on the bus (and will acknowledge if the message was properly received). It is up to each node in the system to decide whether the message received should be immediately discarded or kept to be processed. A single message can be destined for one particular node to receive, or many nodes based on the way the network and system are designed [14].

SAE J1939

CAN standard does not specify how to handle messages larger than 8 bytes. Therefore, a set of standardized protocols exist to further define how data is communicated between ECU of a given network [13]. For example, Society of Automotive Engineers standard SAE J1939 is a standard used in Scania vehicles for communication, which uses CAN bus as physical layer. It is a recommended practice that defines which and how the data is communicated between the Electronic Control Units (ECU) within a vehicle network [15]. If CAN bus is a "tool" for communication, then SAE J1939 standard can be regarded as the "language" for conversation.

The particular characteristics of J1939 are [15]:

- Extended CAN identifier (29 bit)
- Bit rate 250 kbit/s for J1939/11 and J1939/15, 500 kbit/s for J1939/14[16]
- Peer-to-peer and broadcast communication
- Transport protocols for up to 1785 data bytes
- Network management
- Definition of parameter groups for commercial vehicles and others
- Manufacturer specific parameter groups are supported
- Diagnostics features

Generally, a CAN message consists of several CAN signals and each signal contains the data of certain component. Figure 2.5 (Reproduced with permission from Martin Falch) is a simplified picture of a CAN message with extended 29 bits identifier, which is the format used in e.g., the J1939 protocol for trucks and buses. The 11-bit identifier (CAN 2.0A) messages look similar, but with shorter CAN IDs.

Fig. 2.5 A sample of CAN message (29 bits identifier) [13].

SAE J1939 forms the basis of the CAN protocol, but not all parts are implemented in Scania vehicle. For instance, for external CAN communication, three main parts are SAE J1939-81 (Network Management), SAE J1939-73 (Diagnostics) and SAE J1939-21 (Data Link Layer) [17].

2.2.3 System configuration

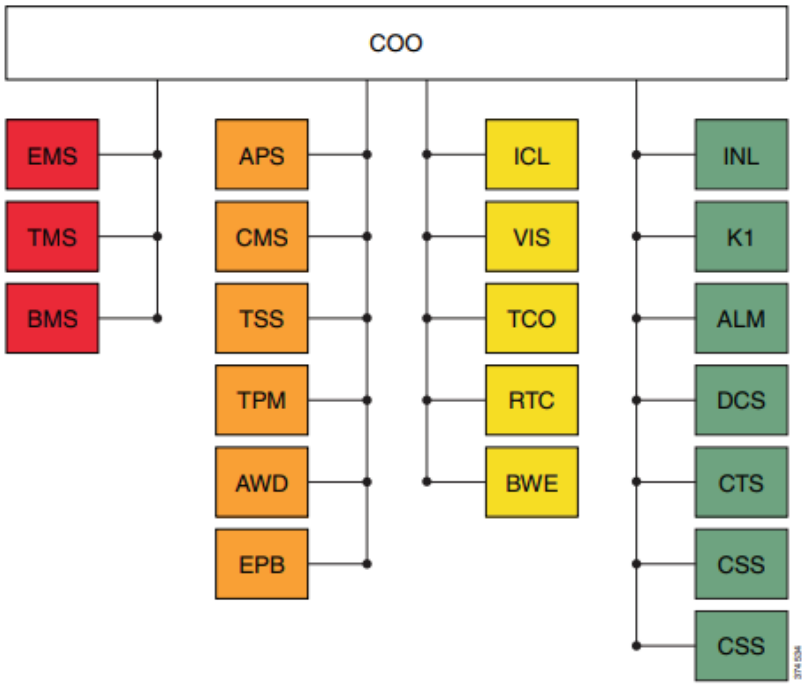

Fig. 2.6 A simplified topology of SESAMM [5].

SESAMM (Scania Electrical System Architecture made for Modularization and Maintenance) is the common electrical system used by all vehicles produced by Scania. It is a system of distributed Electronic Control Units (ECUs) that operate over four different CAN buses, interconnected by a coordinator ECU system. Figure 2.6 (Reproduced with permission from Scania) is a simplified topology of SESAMM . Each ECU system in SESAMM is "owned" by a person or role in the Scania organization (i.e., system owners). ECU system ownership indicates responsibility for that particular ECU system, and its development and evolution. Whenever changes to SESAMM affect a particular ECU system, the owner of that ECU system should be involved [18].

Those CAN buses are categorized mainly based on the level of mission criticality of the ECU systems connected to each bus (or more specifically, the severity of consequences

when the CAN bus communication fail). The Green bus connects ECU systems related to informatics, heaters, and climate control. The ECU systems on the Yellow bus are mostly related to cab specific functions, e.g.,visibility, diagnostics and instrumentation, and the Red bus mainly connects core functionality ECU systems, such as powertrain control and brake management [18]. The Orange bus is in charge of functionality located in chassis, including suspension, differentials, fuel, etc.

Within each main CAN bus, every CAN messages is broadcasted and all ECU connected at that CAN bus can listen to it. However, the information transmission between different CAN bus is controlled by Coordinator. In other words, if SESAMM is a "nervous system", then coordinator is the "brain". Communication will be done automatically inside small systems (each CAN bus) but only coordinator can enable communication between all parts of the "body".

This kind of configuration has obvious advantage. The system will operate more efficiently. Because CAN protocol is a message-based protocol, an ECU always listen to high-priority CAN message compared to low, which makes it hard to sequence the priority of all CAN messages in whole system if all ECU are connected to a same CAN bus. Sometimes a CAN message can highly influence an ECU but be unnecessary to another. Dividing ECU into different groups according to their responsibility (e.g., Tyre Pressure Monitoring and All Wheel Drive) helps reducing the transmission time. Related ECU will be able to share information without the interruption of unwanted messages. Separating ECU into groups also helps diagnose and troubleshooting.

However, this configuration has its drawback – it sets obstacle for software update. When an ECU needs new CAN messages from another ECU in different CAN bus, developers need to reprogram the coordinator for purpose of its permission. This effects development process of customized trucks to some extent, which will be explained in detail at the end of this chapter.

2.2.4 Functional development

A truck's electrical system can be seen as the combination of dozens of user functions. User function stands for the relationship between user goals and components' behavior. In order to understand the role of an ECU, analyzing its functionality is essential. In some cases, the implementation of a user function is isolated to a single ECU system, but often the implementation of user funtions requires the support of several ECU systems [18]. For example, the supervision of tire pressure requires monitoring system to measure it and send real time CAN message depending on pressure status. Coordinator should transmit the message to yellow CAN bus in order to present the information to driver in instrument panel. Moreover, after driver takes action, the tire pressure manage ECU needs to receive corresponding CAN message and translate it into signals for the pneumatically-controlled gate valve. The whole function needs support from several underlying ECU systems so

that all required activities can be executed correctly.

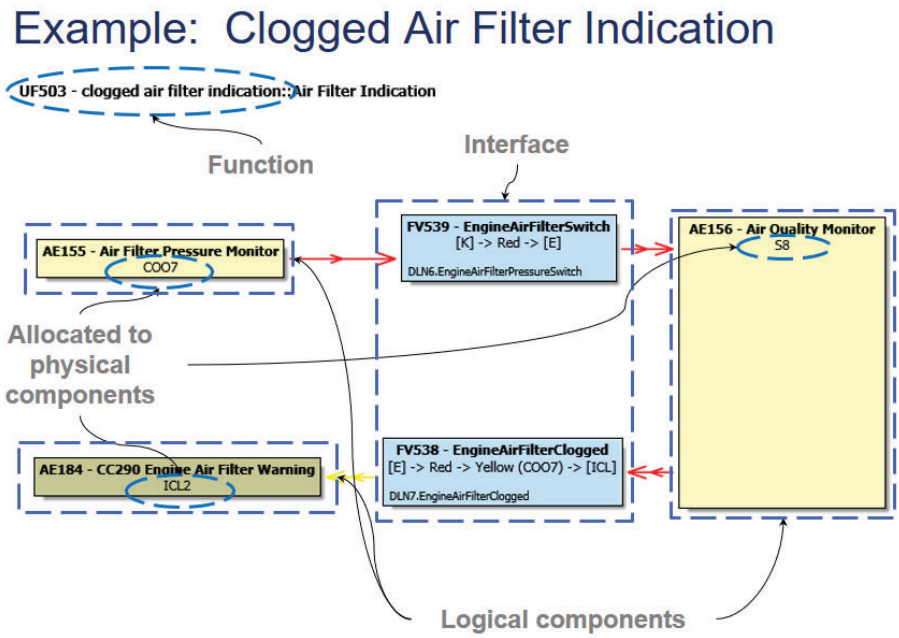

Fig. 2.7 Logic block diagram of function: Clogged Air Filter Indication [19].

When developing or analyzing a function, two parts should be taken into consideration – physical components and the interaction logic among them. Physical components defines the interface and message type while logic decides the architecture and influences software design. Scania uses modularized logic packages for functional development. The logic block diagram of each user function and its physical components (e.g., related ECU), can be easily found in internal database. Figure 2.7 (Reproduced with permission from Scania) is an example.

Similarly to ECU systems, user functions are owned by persons or roles in the Scania organization (i.e., user function owners). It is not uncommon for a ECU system owner to also hold ownership for a number of user functions that are mainly implemented on that particular ECU system [18].

2.3 Bodywork Electrical System

BWE (Bodywork Electrical System) plays an important role in system development of customized trucks. So one concept and two parts of that system will be introduced in this section.

2.3.1 Truck bodybuilder

As is well-known, trucks have many applications, such as cargo transport, fuel transport, tipper, fire engine, etc. Different application usually needs different kinds of truck body with additional systems. Although Scania already introduces advanced modular design in production, cost will always be a factor for expanding product line. For the best profit, it is better to cooperate with diverse external companies which manufacture one or two kinds of truck's body corresponds to its application. These companies are called truck bodybuilders.

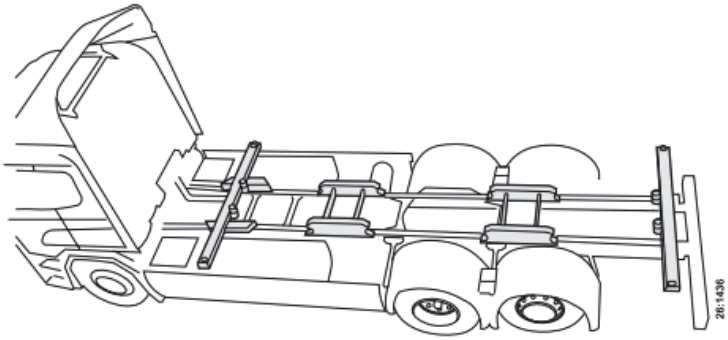

Fig. 2.8 Scania truck without a body (truck transported to bodybuilders) [20].

After customer making an order, the production of cab and chassis will be proceeded inside Scania. Meanwhile, truck bodybuilders start to manufacture truck's body. Next, when Scania factory have done the production, the truck, which looks like Figure 2.8 (Reproduced with permission from Scania), will be sent to bodybuilders' factory. After mounting both mechanical and electrical parts of body and truck, customer finally get their desired product. For example, Figure 2.9 (Reproduced with permission from Scania) is a common type of truck body – timber transport.

Fig. 2.9 Scania timber transport truck [21].

2.3.2 Bodywork Communication Interface

Officially, Bodywork Communication Interface (BCI), as shown in Figure 2.10 (Reproduced with permission from Scania), is an electric control unit for bodywork in the Bodywork Electrical System. BCI manages all bodywork's logic to the vehicle. The control unit retrieves information from the vehicle's other systems to be able to check if the activation of different functions is permitted. The BCI is connected to and communicates with the other control units in the vehicle via the vehicle's internal CAN bus (yellow CAN bus in Figure 2.6). The bodybuilder can activate some functions through Bodywork Interface Configuration (BIC) and External CAN [22].

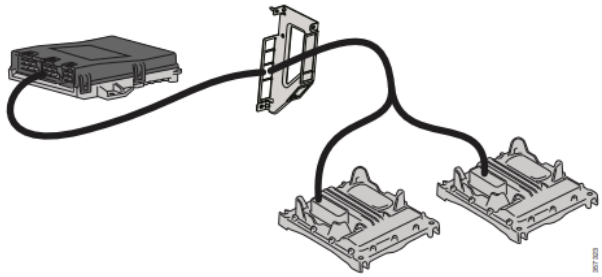

Fig. 2.10 A draft of BCI (connected with expansion nodes) [22].

In other words, BCI is the ECU with its interface that behaves as a "bridge" or a "gateway" between Scania truck electrical system and external bodywork systems. It has several tri-state inputs, PWM outputs and two levels of power outputs [23]. 5 CAN interface [17] are also integrated in it for the communication among SESAMM, expansion nodes, truck body and other usage. Figure 2.10 (Reproduced with permission from Scania) is a draft of BCI and that BCI is connected with two expansion nodes.

2.3.3 Bodywork Interface Configuration Tool

In addition, BCI is programmable and used to achieve some simple functions. Rely on a software named Bodywork Interface Configuration Tool (BICT), truck bodybuilders are able to design some simple functions based on given type of input/output signals and operators.

Figure 2.11 (Reproduced with permission from Scania) shows how a program is made up in BICT. This bodywork function is trailer coupling. Those gray rectangles present the inputs from input pins while red ones presents the outputs to output pins. Cyan and dark blue blocks stand for signals or conditional signals coming from CAN bus. Blue squares are logical operators, such as AND-OR-INVERT.

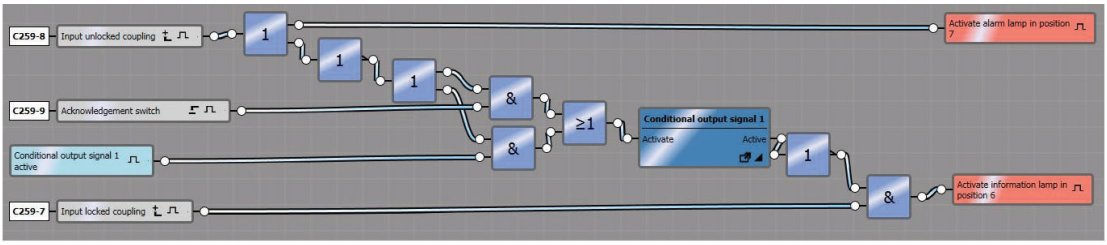

Fig. 2.11 Example program for trailer coupling [24].

Software users can drag different kinds of blocks from sidebar and build own connection among them. Furthermore, a simple simulator is integrated in this software. When programming and simulation are completed, the software will generate a ".BIC" (Bodywork Interface Configuration) file and user could download it online and apply it to own truck through CAN interface.

2.4 Development process of trucks

Scania development process of trucks in essence is a Order-delivery process. Figure 2.12 is a simple flow chart of Order-delivery process. Normally, if the existing product portfolio fulfills customers' expectation and they have no additional requirements, production line will take charge of the order. Whereas, as previously mentioned, different trucks have various operating conditions. So changes or designs based on existing modules are necessary and departments of research and development will involve. During whole order-delivery process, they mainly focuses on design, manufacture and help production line with assembling and installation.

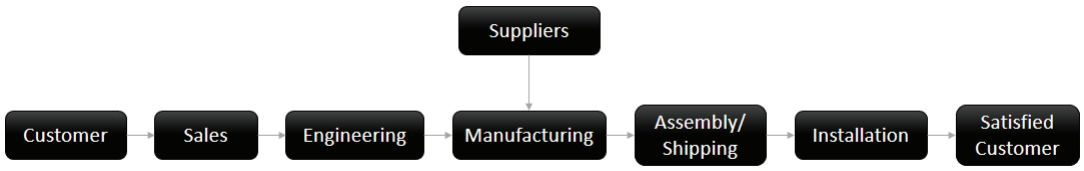

Fig. 2.12 A flow chart of Order-delivery process.

Inside Scania, there are individual timelines describing those procedures. Based on interview and research inside company, the timelines are demonstrated in Figure 2.13. The yellow line is ordinary development process while the blue line is customized trucks' development process.

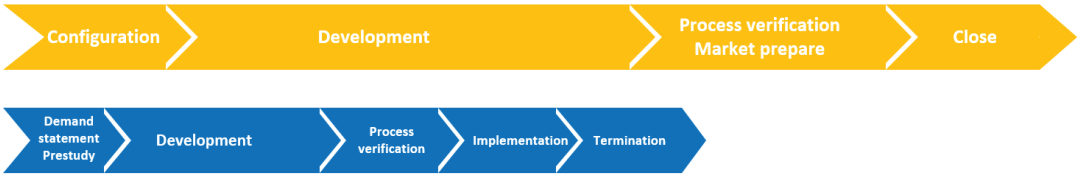

Fig. 2.13 Development process for trucks.

2.4.1 Ordinary development process

As soon as dealers pass customers' orders to research and development, developers or designers need to study and understand its technical requirements. Then analysis its feasibility. Until that is done, the first step called "configuration" is completed. Part two is development, which contains cost estimation, making out a schedule, programming, module test, system test, function test and so on. All the new functions together with old ones are requested to be testes at complete vehicle level and get through long-time field test. Till then, the process is verified and preparation for market is completed. After customer's driving test is passed, the issue will finally be closed.

There are about 15 milestones during whole procedure and the normal time-cost is two years or more. If one order affects several technical departments (e.g., affects several systems), negotiation and cooperation between many system owners and function owners are also necessary. That will definitely increase the workload and lead time.

2.4.2 Customized trucks (special order) development process

Customized trucks, as the name implies, are trucks with components or functionality that are not normally provided within the standard product portfolio. For example, some countries have special regulations for trucks used for certain application or some truck's operation condition is rare. They are low-volume but high-profit compared with standard ones and built based on ordinary production line. The development process of customized truck is a bit similar to ordinary. But compared with ordinary procedure, it just has up to 10 milestones that results in shorter lead time.

Customized trucks development process also has prestudy and demand statement procedure, but pay attention to quick methods. Second step, "Development", reflects that idea, as well. Designers use special components (e.g., cable harness, switches, sockets) together with BCI (Bodywork Communication Interface) and BICT (Bodywork Interface Configuration Tool) to build new functionality and pass it to different kinds of test. After process verification, those changes will be implemented at specific parts of production line and the special order goes to termination.

2.4.3 Change request

As noted above, either ordinary development process or customized trucks development process may need to make a cross-functional change on the electrical system. In order to follow the entire process and make it easy to coordinate, a change request is needed to be proposed. Combining the result of interview and investigation, the detail process of a change request is displayed in Figure 2.14. For ordinary development process, a change request is usually put forward at the beginning of "Development" but special order designers will start it earlier, during "Prestudy".

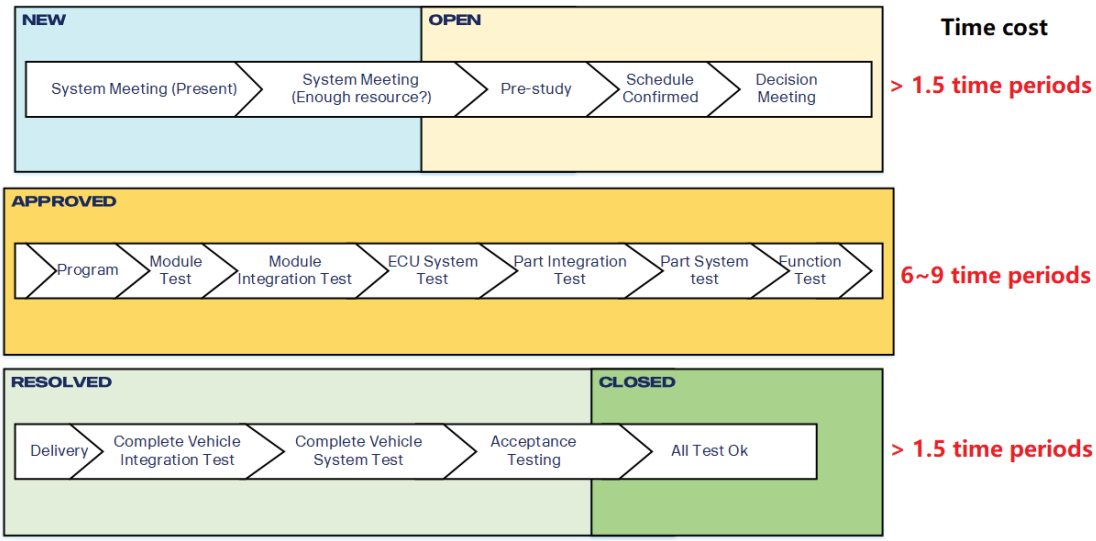

Fig. 2.14 Detailed timeline for a change request.

Change request often merges with development process. It is composed of 5 steps: "New", "Open", "Approved", "Resolved" and "Closed". Those arrows inside each step presents how the process be promoted but their time is not fixed. Obviously, the larger amount of system a change affects, the more time it consumes. According to the interviews with several system owners, the expected time for a change request is usually more than 12 time periods. The first two steps cost 1.5 time periods in the best case and "Approved" process needs 6 to 9 time periods. The last two steps expend at least 1.5 time periods.

2.4.4 Pros and cons of customized truck development process

The advantage of special order design is customized, fast and trustworthy. Its development process is similar to the normal one development. Besides, with the help of BCI and BICT, a shorter lead time can be realized so that both customers and Scania get considerable profit.

In fact, the reality of customized requirements is far more complex. Because BCI and BICT are initially designed for external bodywork systems that have fixed application, there are many limitations inside BCI and BICT. It is almost impossible to gain access within the strict boundary. Sometimes it restricts the potential and possibility of solution. With the development of diversity of customized trucks, BCI and BICT become a "double-edged sword" in special-order designers' opinion.

Limited input/output

Generally, a truck body's system doesn't need lots of electrical interface. If necessary, bodybuilders will add extra units and connect with BCI through its external CAN interface. That is the reason why BCI and BICT only provide a few I/Os for users, which are less considering some other ECU in SESAMM.

Before designing customized functions, engineers are forced to reserve some pins for bodybuilders' demand. What is worse, if bodybuilder's system need to occupy all the pins (e.g., different power take-off functions), it is almost impossible to use an ECU for customized truck development.

Restricted communication

For information security, Scania restricts the CAN message sent to external system. Although the information flow in Yellow CAN bus is not small, user of BICT just have access to little of them because BCI is the one and only one "gate" between SESAMM and external electrical system. From system architects and other system owners' perspective, developers of customized trucks are internal staffs but "wear external bodybuilder's hats". Whenever they want to ask permit for more information in BICT, architects discuss seriously before consent because bodybuilders would get those information too if it is implemented.

As a result, many unnecessary challenges arise. Sometimes an alike function is already implemented in another ECU and fits the developing customized function perfectly. What it only needs is receiving certain CAN message. But with restricted access, neither BCI nor coordinator support it. Finally, designers have to add extra system to achieve it without CAN communication.

Long-time waiting for change request

To overcome those problems, a direct way is creating a change request, such as asking an update for BCI's interface or requesting for more available CAN messages in BICT. Nevertheless, the time cost for change request is huge that even exceeds the estimated time for whole special order development process. It is caused by several reasons:

As decribed before, there exist plenty of safety principles and regulations for each

ECU control system and entire SESAMM system. Every time a change is plan to implement, analysts need to consider it carefully from several perspectives. Furthermore, introducing new functions in BICT means external bodybuilders will have access to them. How they using them may be out of Scania architects control, which make it harder for them to make the decision.

Moreover, special order designers did not highly participate in BCI's development and upgrade projects. So it is hard for them to have deep understanding regarding its hardware and software. They can not push forward the project much even though they got time and passions.

2.4.5 Develop a new ECU for customized trucks

According to last subsection, special order designers often struggle with complex function's implementation. They either wait endlessly for other department's help to make a good solution or solve it by a new physical system along with functions in BICT. From designer's perspective, the latter solution is perhaps faster but not good enough .

Consequently, a new idea emerged: If there is a module system, e.g, an ECU, developed by special order designers and only used for customized truck's system development, the input and output interface will be no longer influenced by trucks bodybuilders and it is able to communicate by more CAN messages. Furthermore, the time for change request will reduce because designers have a good knowledge of its technical specification. This thesis project is the first step towards those goals.

Chapter 3

Demand analysis

The potential functionality of the new special-order ECU are presented and discussed in this chapter. The requirements arising from those functions are analyzed and a conclusion is drawn.

3.1 Former functions

In order to create a good specification for the new ECU, it is necessary to investigate the customized trucks' functions that were implemented before. The investigation was carried out during May of 2018. There are 54 former designs in total, including designs for last generation's (Generation 5) and this generation's (Generation 6) truck. Generation 4 truck is far away from the present so it is not regarded as a good reference.

During research, the order description and function description were carefully studied together with electrical schematics. Each design's related components (systems) and hardware requirements were extracted. Table 3.1 and A.2 present a part of the result and it will be analyzed in-depth at section 3.3 and 3.4. It should be noted that tables exclude some repetitive functions, which are implemented during Generation 5 and already inherited by Generation 6. The information is mainly collected through Scania internal database. They have detailed description of each customer order and circuit diagrams of the design.

3.2 Future functions

Having the ability to achieve former functionality is just a fundamental requirement for the developing new ECU. In addition, it should have the capacity for upcoming functions in the future. Two parts of functions are taken into consideration during the project: Functions from other type of vehicles, Possible functions of next generation truck.

Table 3.1: Collection of former designs for Generation 6 Trucks.

Order number	Diagram number	Function description
593093	2548139	Gear box needs an extra signal from solenoid valve
599603	2561371	Extra cable harnesses for hand lamp socket
607478	2592776	Control lifting of third axle without SMS ECU
630673	2621627	Update cable harness for the NL pre-serial vehicles
615301	2624796	Control a load transfer device by switch and BCI
610789	2626522	Send information about tag axle position to CM
620700	2645985	Add connector for work lights of two fifth wheels
622041	2651349	Provide power to a horn and present it in ICL
584977	2474539	Detect deviations of slider lock and send warning
604545	2564396	Indicate trailer coupling's state in ICL
631168	2674567	Install Tyre Pressure Management on all vehicles

3.2.1 Functions from other type of vehicles

With the increasing application scenarios of trucks, more and more demands and requests for improving arise. Engineers realize they can "borrow" some functions which are already installed on other types of vehicles instead of building up from nothing, since those functions are well-defined and quite matured. During this project, the user functions of Scania bus are mainly concerned because their technology transfer are easier to transfer to Scania truck in a brief period.

Scania sliding city door

Fig. 3.1 Truck cab with a sliding bus door.

Scania new L-series truck with a sliding city door shown in Figure 3.1 (Reproduced with permission from Scania) could be a good example. It is a bus sliding door installed on truck's passenger side, which improves visibility and safety greatly in inner-city traffic. Particularly in historic European cities with vary narrow streets. It will vastly improve the operating conditions for two applications: distribution and refuse collection. For distribution truck and refuse truck, passengers (workers) often need to open the passenger door and get off. A sliding door not only save the space outside the truck, but also save workers' physical strength.

The typical structure of a inswing door contains door leaf, operating rod, guide rail and an actuator. The movement of leaf is based on rotation of operating rod and guide rail of mechanism. Door leaf guide roller follows the rail during the movement. The actuator of the doors is cylinder or a one gear motor, depending on the door type. The operating force received from the actuator is transferred to the door directly by cylinders or by using the rods.

The overview of the function can be described as steering a 24V motor. It is a permanent magnet DC motor with spur gearhead Compactline 92 whose nominal power is approximately 100W. Its detailed parameters can be found in manufacturer's product catalogue [25]. The ECU should also be able to drive it in both directions (clockwise and counterclockwise) and constantly monitors its position and speed. Furthermore, handle the feedback signals from sensors (e.g.,a pulse encoder or a potentiometer). Last but not least, obstacle detection features are required in case passenger get hurt.

Other useful bus functions

Driver warnings for open hatches, interior lighting, climate regulating for driver's and passenger's areas, etc.

3.2.2 Possible functions of next generation truck

The blueprint of new generation truck has been widely discussed and one popular concept is autonomous truck. The field of autonomous vehicles is a rapidly growing one, with significant interest from both government and industry sectors. Autonomous vehicles represent the intersection of artificial intelligence (AI) and robotics, combining decision-making with real-time control [26]. Autonomous truck has enormous potential in several applications such as highway transport, mining industry, cargo distribution and so on. Scania has been conducting research within autonomous transport systems for a decade, Figure 3.2 (Reproduced with permission from Scania) is the picture of autonomous truck test. Although some functionality and technology are still immature, there is no doubt that autonomous truck will come into the market in the future. When designing a new ECU, it should be taken into account seriously.

Just as other trucks, autonomous truck's electrical system is made up with plenty of

Fig. 3.2 Scania autonomous truck test [27].

user functions. Since autonomous trucks need to adapt their behaviour to each other and optimize the flow of goods, a new calculation platform and several special functions, like platooning [27], will be introduced. To achieve the goal, plenty of new components will be mounted on the truck. In Figure 3.3 (Reproduced with permission from Scania), these features are listed [28]:

- Automation control unit – Collects data from the vehicle's numerous sensors and combines it to give a comprehensive view of the surrounding area.
- Multi-lens camera – Monitors the area in front of the vehicle
- Short range radar – Provide 360-degree detection of other vehicles and pedestrians
- Long range radar – Long range detection enables high speed driving
- Lidar – Behave as high resolution distance sensor
- Inertial sensors – Measure the rotation and acceleration
- Wheel speed sensors – Measure the rotation of each wheel
- GPS – Allow the vehicle to plan its route
- Incident recorder – "Incident black box"

Based on the data from different kinds of sensors and calculation result of intelligent platform, the trucks have the ability to interpret and adapt to their surroundings and carry

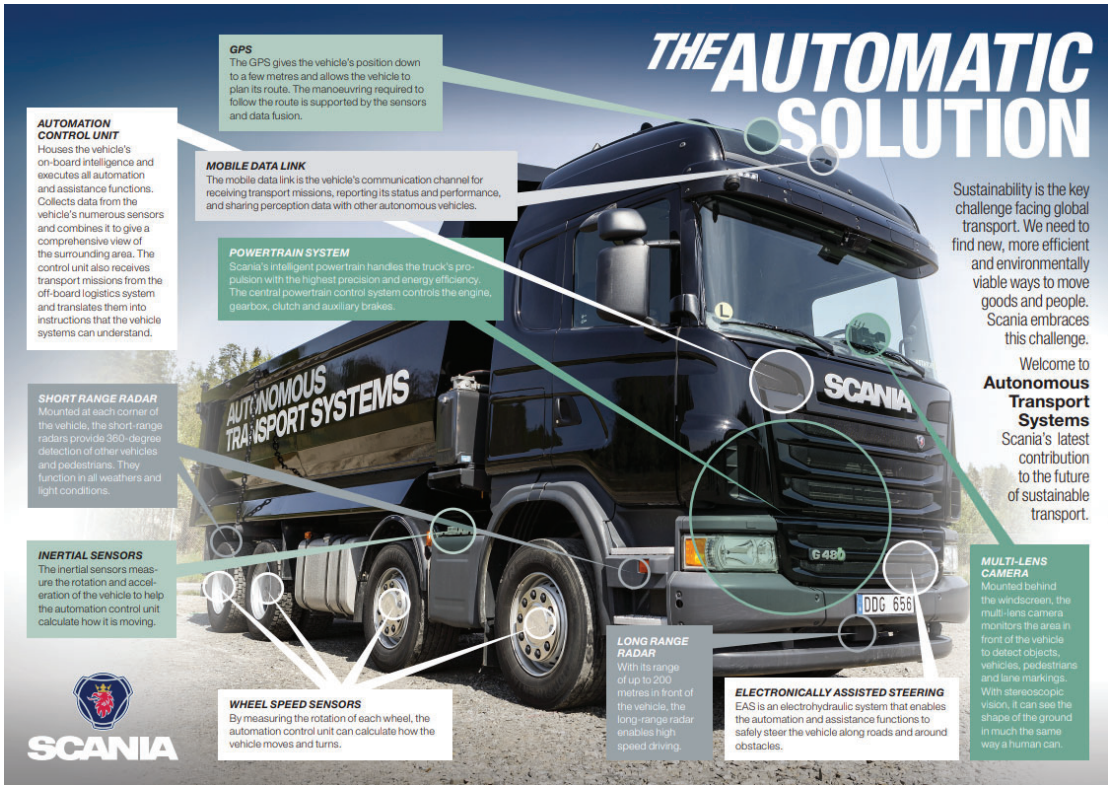

Fig. 3.3 Scania autonomous transport systems [29].

out pre-determined tasks [28]. Nowadays, it is already too strict for BCI to handle all special order, let alone those for autonomous trucks in the future. So the new special-order ECU's is suppose to make preparation for upcoming changes.

3.3 Classification of demands

It is necessary to classify potential functions so as to analyze their requirements in depth. Aforementioned 54 former designs are divided into 4 groups according to their related components and hardware requirements: Introducing a new system, New connection among systems, Small update of component and Position adjustment, as Table 3.2 shows.

In general, there is little new interaction among different ECU for small update of components or position adjustment. New components are connected to a certain ECU or the length of some cable harness is changed. For instance, connect an extra solenoid valve to a control unit, connect sounder to door switches, add cables and connectors for the expansion tank positioned behind the cab, etc. Hence, those two group will not be considered as the new special-order ECU's task.

Instead, first two groups were analyzed carefully in order to figure out the number of necessary pins for those functions. Furthermore, the type of input/output was discussed.

Table 3.2: Four groups of former design.

Group	Example	Total number
Introducing new system	Introduce an additional cab heater to the ordinary heater	12
New connection among systems	A switch in dashboard to enable ABS system off-road function	16
Small update of component	Adapter cable for lamps to mark wide loads	24
Position adjustment	Move SMS ECU to a new position for AWD trucks	2

Table A.1 presents the result of analysis.

Another issue is that since this new ECU is planned to replace BCI for special-order designs, which CAN bus is its best location? After checking related components of each function, as Table 3.3 shows, the results indicate that yellow CAN bus or its subsystems are still the most suitable place for a special-order ECU at this stage.

Table 3.3: Relevant CAN bus for customized truck's design.

Color of CAN bus	Number of relevant special order design
Red	4
Orange	4
Yellow	10
Green	3

3.4 Requirements from demands

So far, the most relevant functions of a new special-order ECU have been analyzed. Now the basic requirements of demands can be concluded:

- Location: Yellow CAN bus
- Number of I/O: More than 30 pins
- Type of I/O: Digital, analog, pulse width modulation, frequency
- Interface: CAN bus, coaxial cable, Ethernet
- Highest output power: approximate 220W
- Maximum current of output: 20A

It is notable that Ethernet and coaxial cable interface haven't been widely used on automobile nowadays. However, they are necessary for autonomous trucks because large datasets are exchanged not only among automation control unit and different sensors but

also between the on-board automation systems and remote control center (e.g. download high resolution cloud based maps). Figure 3.4 (Reproduced with permission from Scania) gives an example to show how autonomous trucks operate orderly under the control of remote center.

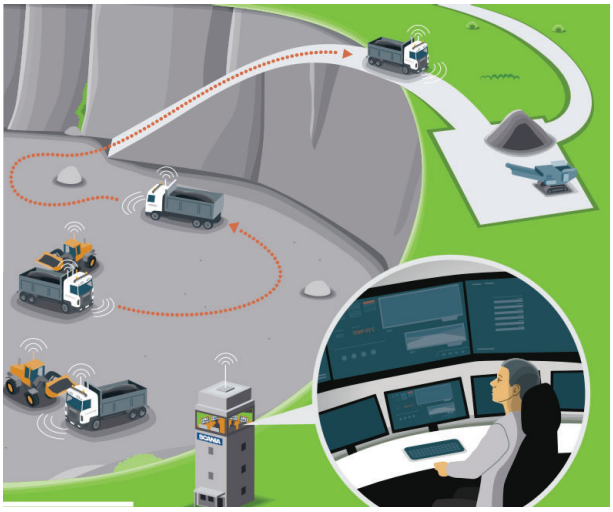

Fig. 3.4 Communication between control center and autonomous trucks [29].

Chapter 4

Hardware and software investigation

Alternative hardware for the new ECU, along with their software platform, are listed in this chapter. Moreover, competitor's solution for customized vehicle is investigated and presented.

4.1 Other deigners' solution

4.1.1 SCANIA bus/coach body

Truck is not the only product of Scania. It also has production line for coaches and buses. Different from Scania truck whose body is always built by bodybuilders, Scania manufactures both bus chassis and own-label bus body. Similar to trucks, buses or coaches have different applications, such as city, suburban and intercity. The functionality of bus body frequently needs to localize. Many orders of bus need customization, such as Figure 4.1 (Reproduced with permission from Scania).

Fig. 4.1 Scania full electric (BEV) bus [21].

The designers of customized trucks and developers of bus body are "on the same boat" – they both use BCI to create special functions and use it as the interface between SESAMM and their extra systems. Hence, their access are limited by same boundary to some degree. Via an interview with bus body developers, their solution for the problem is revealed.

Body Node System (BNS)

Body Node System (BNS) is an ECU system developed by Scania bus body department. It is in charge of most functions in the bus body, like manual and automatic door system logics, passenger stop request signals, climate regulation for driver and passenger areas, driver warnings for open hatches and so on. With the help of that new ECU, the development time for a new functionality will be able to reduce to 3.75 time periods because it simplifies the process of SSCR.

The system consists of a "main node" and a number of "auxiliary nodes". It is build up based on 32-bit Microcontrollers (MCU) produced by NXP Semiconductors. BNS behaves as the CAN interfaces to chassis electrical systems as well as to its own auxiliary systems including roof hatches, HVAC etc. The main parts of BNS3 are described below:

1. Main controller – Master node
   - Contains all "user functions" and diagnostic functionality.
   - The communication hub of BNS3 and gateway to all chassis systems
   - 6 CAN interfaces,1 LIN interface, 1 Ethernet 100baseTX on high-speed data connector and 1 Ethernet 100BASE-T1 on high-speed data connector.
   - 4 high-power PWM outputs for half-bridge and a bunch of three-state input/ouput.
2. Auxiliary node – I/O slave
   - Use supplier's standard software for I/O handling, master-slave communication etc.
   - Three-state inputs to be used as coding for up to 9 CAN addresses.
3. Auxiliary node – Door control unit
   - Contains functions related to actual door drive and safety functions.
   - Three-state inputs to be used as coding for up to 9 CAN addresses.
   - 4 PWM output for half-bridge control with relatively highest power.
   - 1 12V power output and 4 frequency signal inputs for sensor.

With regard to BNS3's software architecture, there are 3 layers:

1. Board support package from supplier
   - Low-level hardware abstraction layer from supplier.
   - Contains basic function oriented drivers.
2. Scania middleware
   - Scania common hardware abstraction layer.
   - Contains basic function oriented drivers adapted to common Scania interface.
3. Application layer
   - Applications for user functions.

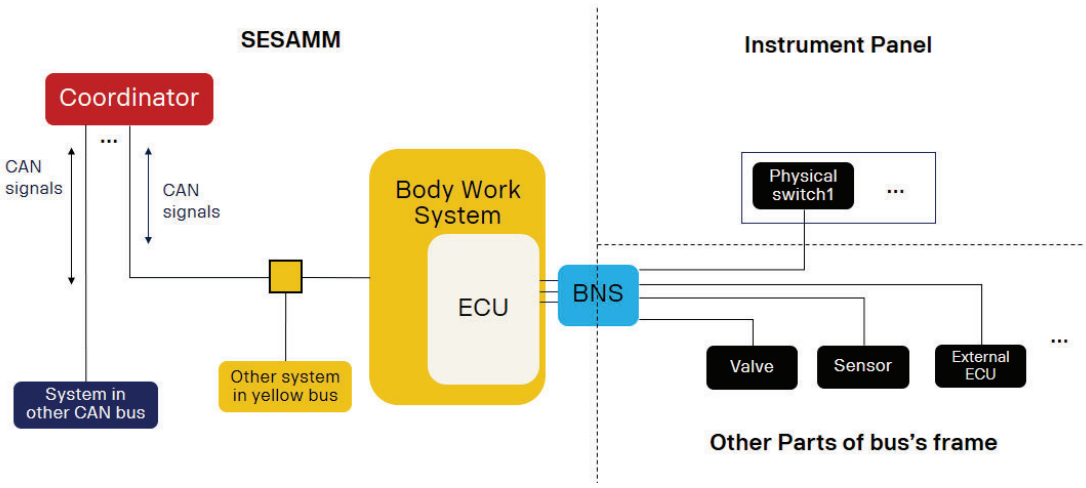

Fig. 4.2 Topology for system with Body node system.

The reason why BNS3 can considerably decrease the lead time is because its special role in SESAMM. As Figure 4.2 shows, it is treated as an external system connected with bodywork system through external CAN interface. That means more freedom and less regulations during change request. Furthermore, they also build a new laboratory for integration test. So developers are able to bypass some steps of the original change request process. Figure 4.3 presents the "special change request process" of BNS system.

However, what can't be ignored is that BNS is still a "slave" of BCI and BCI decides the scope of data access. As long as SESAMM doesn't send certain dataset to Bodywork system, there is no way for Body node system to get those information.

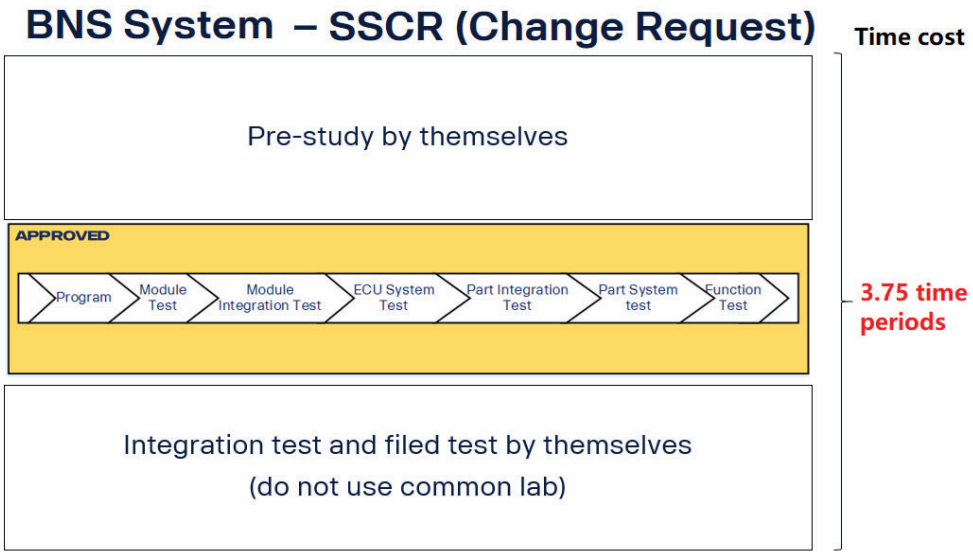

Fig. 4.3 SSCR for Body node system.

4.1.2 Other companies or Competitors

Of course, the goal for this investigation includes other truck manufacturers' solution for customized orders. Unfortunately, because of limited access, few document was found on the Internet concerning the development process of customized trucks. What's worse, according to confidential agreement, it is not allowed to exchange information with customized truck development department in other company (e.g. MAN) in the same business group.

Even then, there are some signs that other companies entrust customized orders to truck bodybuilders. Companies also provide a programmed ECU for that usage. Mercedes-Benz trucks have an ECU bodybuilder node called PSM, which stands for Parameterizable Special Module. It is similar to Scania BICT nowadays. Bodybuilder can define logical expressions using a visual programming tool. But to the authors knowledge they are lacking simulation and troubleshooting capabilities [30].

Iveco and DAF has on some trucks the possibility of bodybuilders to use CANOpen layer[31] for communication with their equipment. But no information was found whether they have any troubleshooting assistance. Volvo, Scania and other manufacturers use a dedicated ECU that have certain signals that are available and the output on the ECU connectors are defined by adjusting parameters [30].

4.2 Research for hardware

Scania internal hardware are primary focus during the research for three main reasons:

1. Approximate 50 kinds of ECU exist in SESAMM at present. Each one is responsible for different functions. In such a diverse group, there may exist a hardware which meets the requirements.

2. Based on the modularization and research for Body Node System, it is known that Scania ECU all have a common middleware. It is easier to build own application layer on a solid basis.

3. Developers will get support from other internal departments or supplier partners faster. Platform can be easily set up because devices are simple to get.

According to "Design Description – SESAMM Gen6 systems" and "List of System Owners and Process Engineers" two documents, the list of Scania truck's ECU and their systems is obtained. As table A.6 shows, some ECU are developed outside the company. Then the scope is narrow to Scania internally developed control unit. Besides, three ECU from BNS are added to the list for consideration.

Then 13 out of 29 ECU are elected and investigated in the following aspects: Fuse type, Number of pins, Type of input, Type of output, Serial interface, Program language and Compiler, Standard time for SSCR, Merits and demerits (based on system owners' opinion).

4.2.1 Common used ECU

Firstly, 4 ECU are introduced in table A.7. Each of them is used by two different systems as the central controller, where:

- CMS – Chassis management system
- BCI – Bodywork Communication Interface
- AWD – All wheel drive system
- EEC – Exhaust emission control system
- FSC – Fuel supply control system
- COO – Coordinator
- DAS – Driver assistance system

The reason that several system choose them is because they all have a common interface for different applications. It is an advantage. However, B2 and EEC3 cost long time for a change request. The standard time for SSCR of COO8 is very short. However, when analyzing it what must be taken into account is it acts as a "rooter" or "gateway" at present and doesn't deal with low-layer job, like steering a motor. That could be the reason why the time cost for SSCR is small.

4.2.2 Distinctive ECU

Part 2 includes 3 distinctive ECU (table A.8):

- EMD – Engine management system
- VIS – Visibility system
- TMS – Transmission Management System

Both EMD and TMS have numerous inputs and outputs so as to handle lots of sensors. VIS is able to provide the most power outputs. But their disadvantages are conspicuous too: customized interface, slower processor, old and expensive.

4.2.3 ECU of bus body system

Finally, have a look at bus body's ECU (table A.9):

- MBS-M – Master node
- MBS-S – Master node slave
- DCU – Door control unit

Their advantages are outstanding: Ethernet interface, configurable inputs and outputs, internal high power H-bridge for motor. Unfortunately, they are expensive and still under testing.

4.3 Research for software

In a nutshell, software architecture contains 3 layers and they have division of labor. Figure 4.4 below is a simple diagram of software architecture.

4.3.1 Low layer

The lowest layer is responsible for signals from sensors and signals to actuator, which is a part of infrastructure software. An actuator here could be a truck speaker or a DC-AC power converter of engine motor. When hardware gets the input, it distinguishes them and transmits them to middle layer. After receiving the signal from middle layer, low layer should transport it to the pins of hardware.

Generally, Scania internally developed ECU are installed the same package of law-layer functions or "Function Library". That maintains consistency in physical layer and helps new developers greatly.

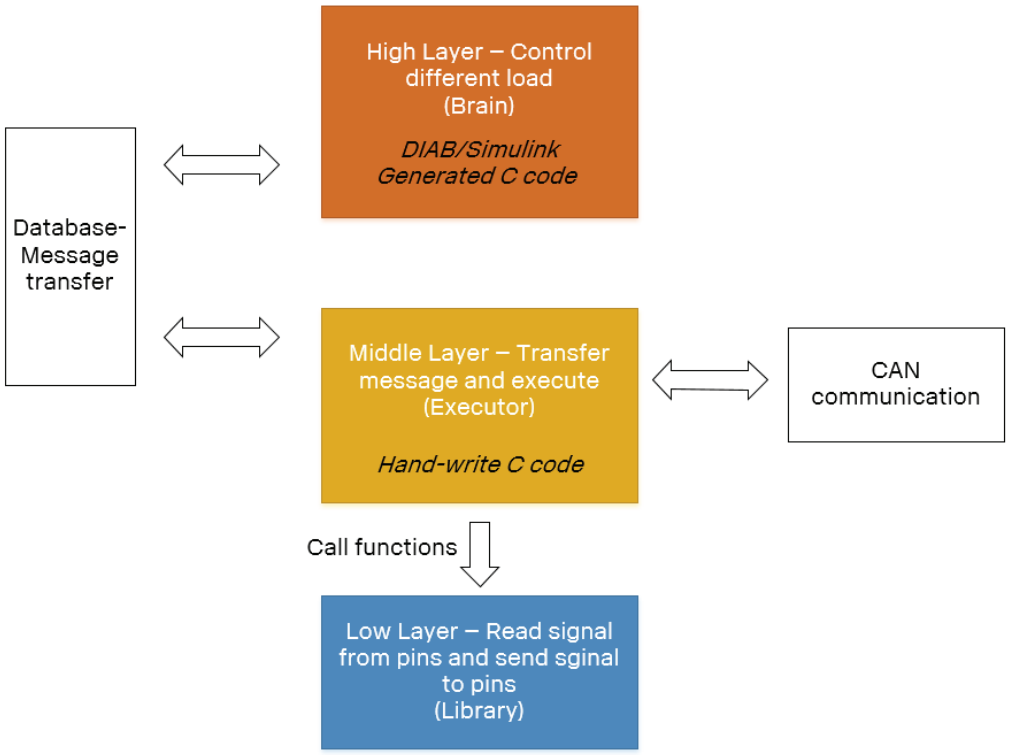

Fig. 4.4 Software architecture of an ECU.

4.3.2 Middle layer

The middle layer behaves as a software executor. It takes charge of communication of message and insuring the execution. It will extract the information from signals and save them to database. Therefore, high-layer application can use those information for operation. When high layer make a decision, the command will be translated to signals by middle layer and finally goes to pins.

Scania also has a common "middleware" as previously mentioned in section 4.1.

4.3.3 High layer

High layer is the "brain" of ECU. It normally has a common platform and different applications corresponding to different tasks. For example, BICT (Bodywork Interface Configuration Tool) is an application located in higher layer. BICT interacts with users, translate users' "function blocks" to machine language. Most calculations are done in high layer and it is the main part of software logical structure.

There is no common version for high layer software because programmers develop many kinds of applications according to their diverse demands. Its logical structure varies

too.

4.3.4 Programming platform

Based on some results discussed in section 4.2, the most popular program language is C and the the compilers are DIAB from Wind River and Simulink from MathWorks. More specifically, DIAB and Simulink are often used to programme high layer for a top-level vision, as Figure 4.5 shows (Reproduced with permission from Lauro Roberto Nunes). Within Simulink model, there is a control logic tool called Stateflow, as Figure 4.6 shows (Reproduced with permission from Lauro Roberto Nunes). It is used to model reactive systems via state machines and flow charts.

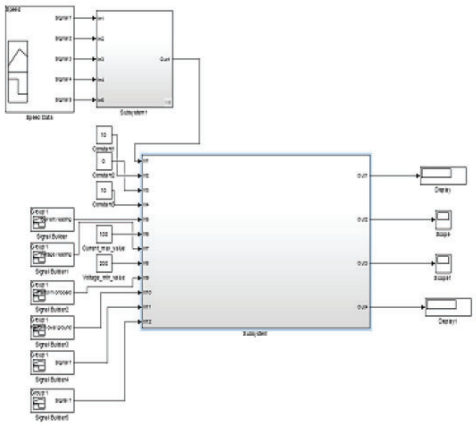

Figure 4.5: Simulink block diagram [32].

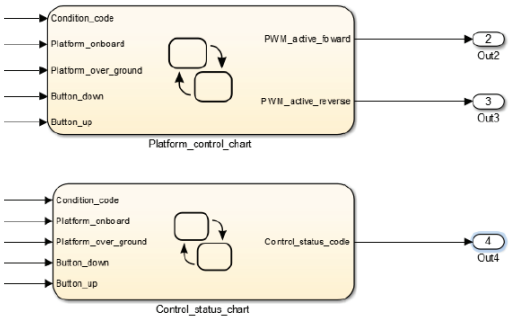

Figure 4.6: Control chart and Control status chart made by Stateflow [32].

For middle layer, different kinds of compilers are suitable for programming because most parts of the code are hand-write. For example, Microsoft visual stdudio, Eclipses, Code Blocks and so on.

At last, low layer codes are usually given by supplier or Scania “Function Library”. So new ECU developers won’t have much workload in low-layer software in this respect.

4.4 Conclusion

4.4.1 Hardware candidates

Comparing the data listed in section 4.2, those 3 ECU from bus’ body node system seems more applicative for developing special-order functions. Because they equip diverse and configurable interface, especially high power H-bridge output and Ethernet port. Besides, its time cost SSCR is faster than many ECU.

Except for BNS's ECU, TMS and COO8 are good alternatives. They advantages are plenty of I/O and very short lead time. Although neither of them has many digital outputs, PWM output can act as digital output to some degree.

4.4.2 Recommended software platform

Among those aforementioned C code compilers, Simulink and Microsoft visual stdudio are preferred.

Microsoft visual stdudio is a complete set of tools and services, which can provides a strong integrated development environment for all operating systems. Simulink is an extended software package of MATLAB, to be precise. It has following advantages:

- Easy to learn
- Library has abundant functions
- Simulink's modularity is helpful in constructing system model
- MATLAB can choose better algorithms automatically to avoid errors

Chapter 5

Prototype build and test

A prototype with two typical functions is built and test. In this chapter, the design aspects will be discussed in detail. Electrical schematic is presented and the test result is analyzed

5.1 Intended functions

According to the analysis in Chapter 2, there is a dozen of intended functions for the new special-order ECU. Nevertheless, it is almost impossible to implement all of them in a prototype because of the time and budget limit for a thesis project. Hence, two typical functions are chosen to verify the capabilities of hardware candidate.

5.1.1 Control the motor of inward sliding door

It is already known that Scania truck with sliding city door will be introduced to commercial market in the near future. But the control quality doesn't fit engineers' expectation perfectly. The reason is BICT and BCI's ability are not enough to well perform those control functions. Thus, controlling a motor of inward sliding door could be one intended function.

Based on demand analysis, the specification of this function is presented below:

1. Provide power to inward sliding door DC motor, where nominal voltage is 24V and nominal power is about 100W.
2. The output ports can stand high starting current.
3. Output power is adjustable so as to control the motor speed.
4. Be able to operate the motor in either direction (clockwise and counterclockwise) corresponding to user's command.

5. Supervise the motor speed and direction, including obstacle detection, by monitors or sensors.

6. Distinguish the feedback signals and apply the close-loop control.

5.1.2 Combine the communication of different systems

Some customized trucks are equipped with extra systems in addition to standard system. It is hard for them to join the CAN network communication because of limited CAN signals in BICT. For instance, a Scania truck which has an additional decorative lighting system. Nowadays two or more sets of switches are used to control those decorative lights and standard driving lights respectively. Drivers feel inconvenient sometimes and want designers to merge them together. In essence, it needs to control both system's communication at the same time, which could be a typical function of the new ECU too.

The ideal method to realize the function technically is adding extra system to CAN bus though CAN messages. That is the way how the standard system works. For example, Figure 5.1 is the standard switch that controls driving lights by CAN messages. As described above, the problem is BICT and BCI doesn't supply CAN messages beyond default ones. If designers want to introduce new CAN signals, the challenge is the progress of change request was expected to be very slowly because numbers of ECU systems are affected. As a result, engineers have to solve it by introducing a physical system, such as a rotary switch with some extra cable harness. The system's principle is open-circuit and voltage signals. That switch controls the activation of extra lighting system and switch among different lighting modes.

Fig. 5.1 Scania truck standard light switch.

According to chapter 2, CAN protocol is a message-based protocol, which make it possible to replace the standard module by a special-order ECU as long as it sends correct

CAN messages. Meanwhile, ECU can control physical communication system of extra systems then the combination of 2 systems is achieved. For this project's prototype, it is planed to realize the function in lighting system because it is easy to test .

Specification

1. The rotary switch has enough positions for all combination of lighting modes. ECU is able to distinguish the mode based on switch's output.
2. Connect with VIS (visibility system) through CAN bus and be able to wake up CUV (VIS ECU).
3. Send precise CAN messages to VIS when relevant lighting modes are activated.
4. Send correct digital signals and create open-circuit when relevant lighting modes are activated.

5.2 Hardware

MBS or DCU is the preferable choice on the basis of the conclusion of hardware investigation. However, due to some internal circumstance, it is impossible to get one within the period of this project. Instead, TMS was chosen to be the hardware of prototype. TMS has limitation for this usage because it is not specially developed for customized truck functions. But with the help of some peripheral devices, it realized and performed two intended functions reasonably well.

5.2.1 ECU TMS

Recall from last chapter, TMS is the ECU of transmission management system. It equips more processing power and larger memory comparing with old version. Another distinctive feature is lots of I/Os for sensors and actuators. For example, different types of input used as interface of sensors and much more PWM outputs for steering actuators. Besides, more CAN bus connector are prepared for additional devices.

More detailed information is contained in table A.10, including the pin's number and function name of each I/O.

5.2.2 Window regulator motor

The ideal DC motor of the prototype is mentioned in Figure 3.3. It is a permanent magnet DC motor from ZEITLAUF antriebstechnik. However, because of limited budget, a window regulator motor is used as a substitute. It is a DC motor installed on vehicles' door, like Figure 5.2, and responsible for driving the window up and down. Although it

doesn't have as many feedback as a inward sliding door motor, their nominal power and peak current are similar. So it is still enough to verify the capability of ECU candidate.

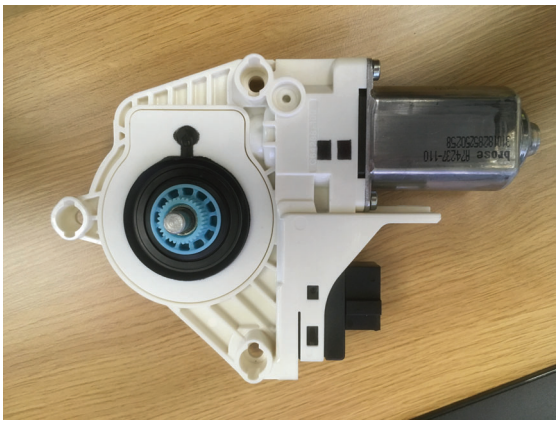

Fig. 5.2 Window regulator motor.

5.2.3 Coding switch

A coding switch with 8 positions is chosen for this prototype so as to switch among different lighting modes. The switch is manufactured by Kraus & Naimer AB and it looks similar to Figure 5.3 (Reproduced with permission from Björn Staf).

It has 3 output pins in total and each of them will send out "0" or "1" voltage signal. According to binary encoding, they correspond to 8 numbers. ECU can distinguish the output of switch by a simple program. If more lighting modes are planed to introduce, a 12 position rotary switch will be enough.

Fig. 5.3 A sample of rotary switch.

5.2.4 H-bridge and gate driver

TMS's PWM output can be used as 24V power output. But the drawback is its nominal current is lower compared with requirement. So the motor couldn't get enough power at

full speed. What is worse, its staring current is too large and may damage the integrated circuit of ECU. Hence, extra electronic components are introduced, such as H-bridge and gate driver. Then ECU's output will become input control signal to the gate driver and truck's battery will be used as the power source for motor instead.

In many control applications, such as motors, DC/DC converters, and class-D amplifiers, the H-bridge is an often-used power control device that drives the inductive load. In particular, the H-bridge driver can control the direction and speed of DC motors [33]. The basic structure of the H-bridge consists of four power transistors, such as BJT, MOSFET, or IGBT, which work as electronic switches [34].

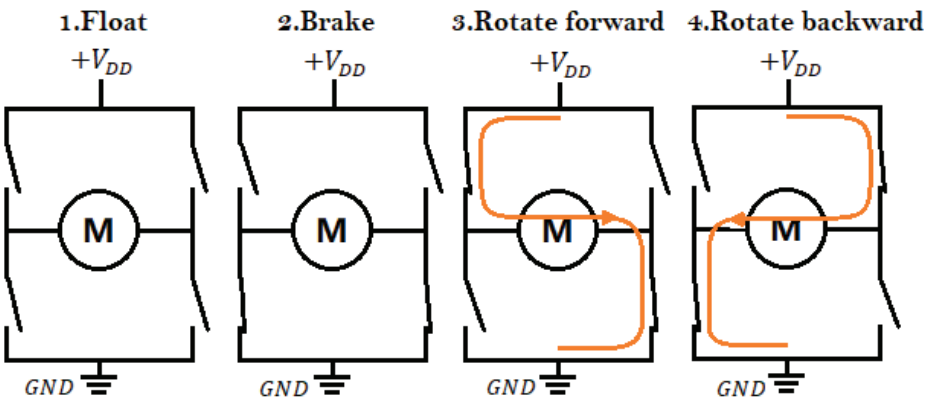

Fig. 5.4 Operating principle of H-bridge.

Figure 5.4 presents the basic operating principle of a H-bridge circuit. $+V_{DD}$ and GND are connected to power supply. The current direction and voltage values of load can be decided by open/close time of 4 switches. For the prototype in this project, the load is a 24V DC motor of the inward sliding door and $+V_{DD}$ is supply voltage from truck's battery. 4 MOSFET are used as swithes. A gate driver circuit will connect to MOSFETs' gates so as to switch them corresponding to PWM input.

Since the voltage magnitude of H-bridge and input signal are different, opto-couples should be introduced in the gate driver to electrically isolate the circuits. It can transfer the control signal from input to H-bridge meanwhile prevent either side from the effect of an accident in other side. For example, a voltage spike. The operating principle is converting ECU's electrical output into a light signal so that the phototransistor on the other side starts to conduct current.

In consideration of time limit and safety issue of the project, an existing motor driving module is be chosen from the market. Figure 5.5 (Reproduced with permission from Guanzhi technology) shows what it looks like. This module uses similar principle as L298N module from STMicroelectronics. It has a gate driver, two H-bridge circuits

and a power source input. Two DC motors can be driven simultaneously under the control of 10-inputs gate drive. The module has opto-couplers isolation, under-voltage protection and fulfills EMC standards [35].

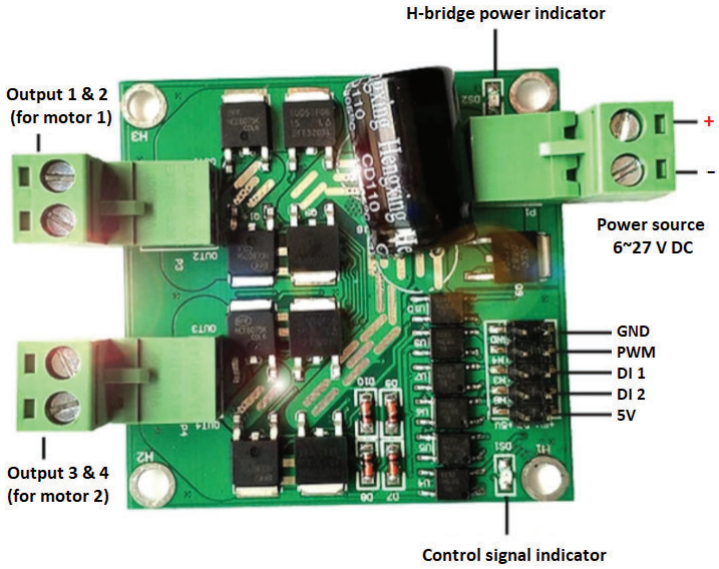

Fig. 5.5 H-bridge and gate drive circuit board [35].

Table 5.1: Electrical parameters of motor driving module [35].

Subject	**Parameters**	**Subject**	**Parameters**
Input voltage range	DC 6.5V $\sim$ 27V	Control signal voltage	3 $\sim$ 6.5V
Nominal input voltage	DC 12V/24V	Control signal current	3 $\sim$ 11mA
Output Number	4 (2 for each motor)	Supported frequency of PWM input	0 $\sim$ 10kHz
Nominal output current	5A	Minimum detectable PWM pulse width	10us
Peak output current	50A	Operating temperature	-25°C $\sim$ 80°C
Nomial output power	84W (12V), 168W (24V)	Dimensions	5.5cm $\times$ 5.5cm $\times$ 2.0cm

Table 5.1 contains some electrical parameters of the module. It meets the require-

ments for outputs very well. Furthermore, table 5.2 is module's truth table. It needs 2 digital inputs and 1 PWM input to regulate the DC motor. The voltage and current of the control signal input from prototype system should not exceed 6.5V and 11mA respectively. The maximum frequency of PWM signal is 10kHz. TMS's outputs will be programmed based on aforementioned requirements.

Table 5.2: Truth table of motor driving module [35].

IN1 (IN3)	**IN2 (IN4)**	**PWM1 (PWM2)**	**Output 1 & 2 (Output 3 & 4)**
1	1	-	Floating
0	0	-	Brake
1	0	PWM	Speed governing (forward)
0	1	PWM	Speed governing (backward)
1	0	1	Full speed (forward)
0	1	1	Full speed (backward)

5.3 Circuit diagram

In total, 18 pins of TMS are used for prototype functions. Figure 5.6 is the circuit diagram. 3 pins are common for both functions: 2 pins are used as power supply and 1 pin for wake-up signal.

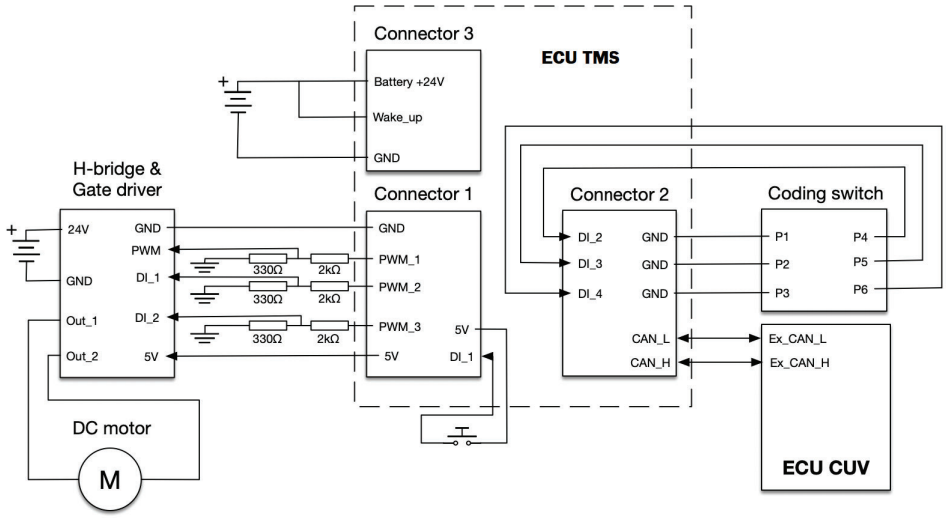

Fig. 5.6 Circuit diagram of prototype system.

5.3.1 Control the motor of inward sliding door

As mentioned above, the motor driving module (H-bridge and gate driver) needs at least 5 inputs as control signals. They are power supply (5V and GND), 2 digital inputs for motor's direction and 1 PWM input for motor's speed. H-bridge's main power source (24V) comes from truck battery through a 20A fuse. H-bridge's output power goes to window regulator motor directly. A push button switch is prepared for user. It will send out a high level digital signal to ECU when user presses the button.

As stated in last section, one drawback of TMS is it doesn't have suitable digital output while the gate driver needs 2 digital input signals. This can be solved by setting the PWM output's duty-ratio to 0 or 1. But the voltage of TMS PWM output is still to high for the module. So 3 extra voltage dividers are added in between to reduce the voltage level of TMS PWM outputs.

5.3.2 Combine the communication of different systems

Firstly, the coding switch is connected with TMS by 6 pins: 3 pins are GND and the other 3 connect to TMS's pull-up digital inputs. By rotating the switch, each output pin will change between high and low states. The combinations are unique and correspond to different lighting modes.

Secondly, TMS is connected to visibility system through CUV's auxiliary CAN bus interface. Normally, it is the interface for module of standard lighting switch, which is actually a small "external ECU". TMS replaces that module and send out exactly same CAN messages, depending on which mode is activated.

Thirdly, all the extra lighting system's cable harnesses are connected to TMS. According to switch's position, TMS will transfer certain voltage signals to corresponding lamps. (It was regarded as a theoretically feasible functionality and easier than second one. Unfortunately, there was not enough time to implement it within the period of project.)

5.4 Software programming

5.4.1 Setting up the platform

The platform of a ECU software developer includes 3 essential kinds of software, which are compiler, flash bootloader and monitoring software. Besides, there should be a workbench with necessary hardware: ECU, junction boxes, ECU connector cable, diagnostic tool and oscilloscope.

5.4.2 Program flowchart

The programs of the prototype can be roughly divided into two categories:

- Initialization functions: Define inputs' and outputs' type and pins. They would be run only once during ECU's start-up.
- Operating functions: Process input data and calculate the output parameter. They are running at 10ms intervals after the initialization is done and until the system is powered down.

Control the motor of inward sliding door

The flowchart of first function is as shown in Figure 5.7. After ECU is woke up, it will check the switch input periodically. When ECU detects the push button switch is pressed and the system isn't in a controlling process, the counter will start to work and set system's state as "In process". If the system is already running a controlling process, any new switch signals will be regarded as disturbance and ignored until the process is finished.

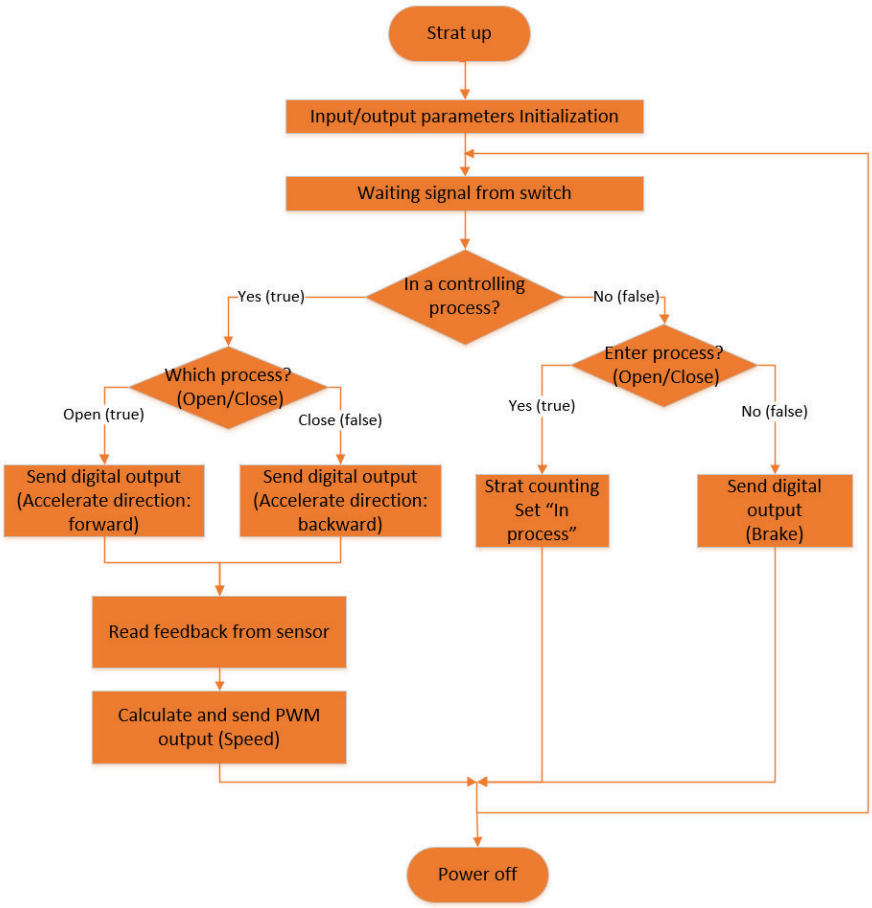

Fig. 5.7 Flow chart of motor control function.

During controlling process, the motor's direction is always opposite to last effective process. Motor's speed depends on operating time of the counter. After calculation, the duty ratio of 3 PWM outputs will be set, where two of them are either 100% or 0 because they behave as digital outputs. Besides, the output frequency of all 3 PWM signals are 5000Hz in order to cooperate with motor driving module.

The system was planned to have feedback signals from the pulse encoder for a close loop control. Because the window regulator motor doesn't have it, prototype can't achieve that functionality at the present stage. But 2 frequency inputs are already prepared for it.

Combine the communication of different systems

The flowchart of second function is as shown in Figure 5.8. Similarly, as soon as ECU is woke up, the inputs' and outputs' pins will be declared and ECU start to check the rotary switch's inputs periodically.

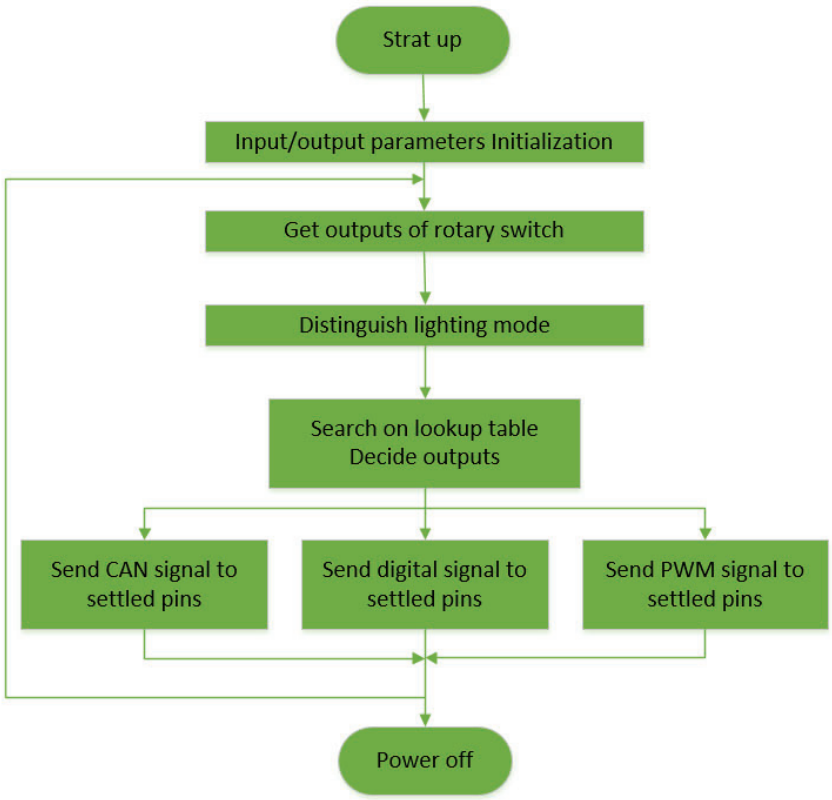

Fig. 5.8 Flow chart of motor control function.

Every 10ms, ECU gets switch's position by reading those 3 digital inputs. Relaying on table lookup method, ECU will send predetermined PWM signal, digital signal or CAN messages depending on present lighting mode. The difference is CAN message is sent to the CAN interface while other signals are sent to pins connected with lighting system's cable harness directly.

5.5 Tests and results

5.5.1 Control the motor of inward sliding door

Figure 5.9 and 5.10 present the test setup of first function. In Figure 5.9, H-bridge module, ECU's outputs and voltage dividers are connected to a same breadboard. A DC power source supplies 25V power and constant wake-up signal to the ECU . In Figure 5.10, a switch links to ECU's 5V output and digital input. The motor is connected with a 24V DC power source through the H-bridge module.

ECU's sends 5 outputs to gate driver, 3 of which are control signals. Their oscillograms are as shown in Figure 5.11. Each control process lasts 5 seconds. When the control

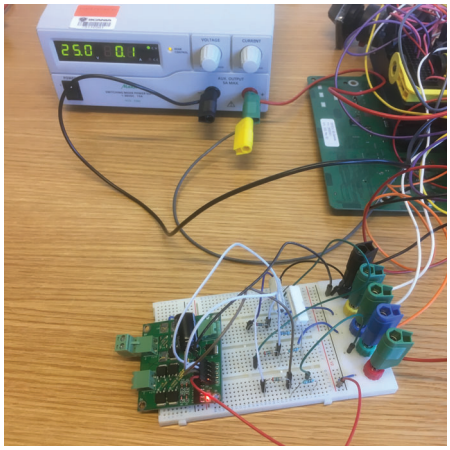

Figure 5.9: Motor driving module.

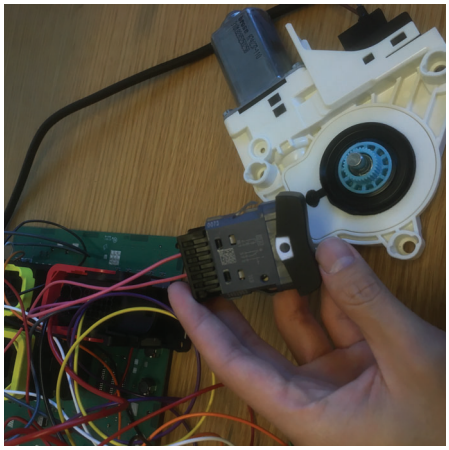

Figure 5.10: Switch and motor.

is activated, PWM signal will wait 0.5s as buffer, slowly increase to 30% and further increase to max value gradually. After operating at full speed for 1.5s, speed signal decays to 30% quickly and finally reduces to 0. There is another 0.5s used as buffer. Two digital signals reverse each time because motor's operating direction is contrary to last time.

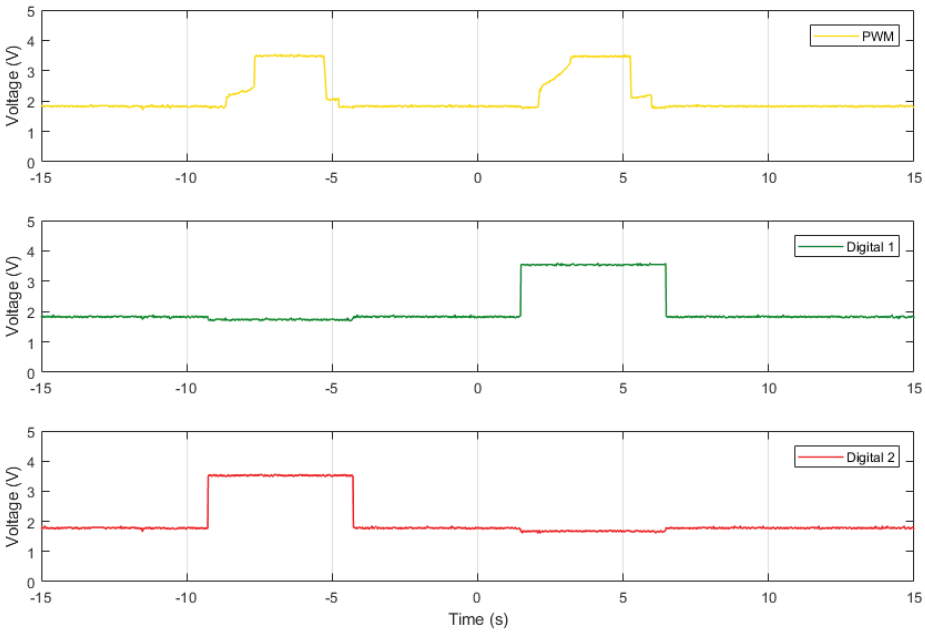

Fig. 5.11 Oscillograms of 3 control signals.

Figure 5.12 is the diagram of motor voltage. According to the theory, its waveform should resemble to PWM signal during each term and has higher amplitude. However, multilevel speed change is not shown in the oscillogram. The reason could be the limit of

motor driving module whose voltage range of input control signal is 3 to 6.5V.

To sum up, the motor rotates as expectation. Before accelerating and after decelerating, there is a short buffer time.

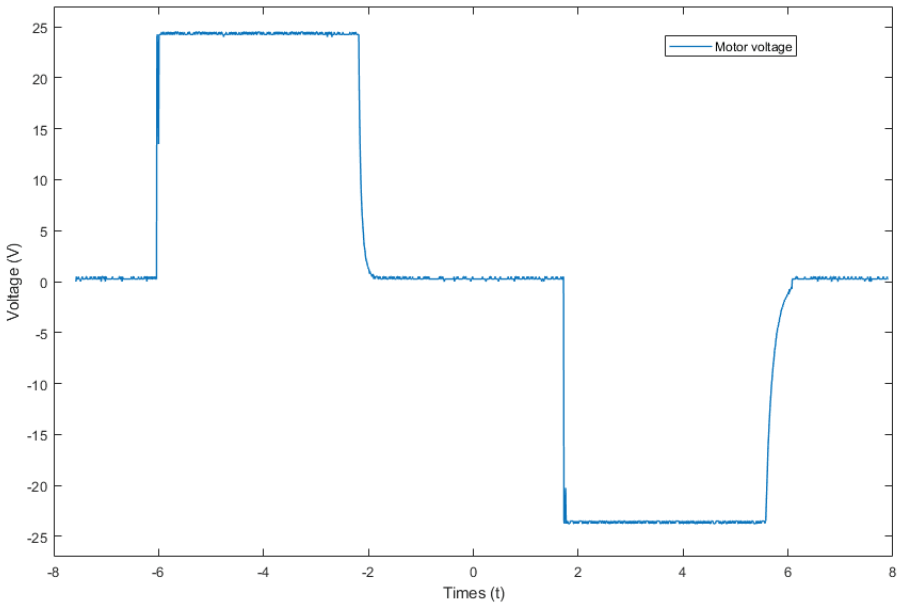

Fig. 5.12 Oscillograms of motor voltage.

5.5.2 Combine the communication of different system

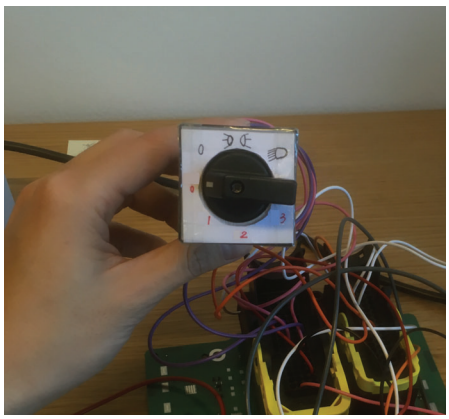

Figure 5.13: New rotary switch.

Figure 5.14: Rig of visibility system.

Figures above present the test setup of second function. Figure 5.13 is the new rotary switch representing 4 standard lighting modes (black image) and 4 customized lighting

modes (red number). Figure 5.14 shows the rig of visibility system for lighting test. Standard module is dismounted and replaced by the prototype system. By rotating the switch, current lighting mode can be recognized by eyes. With the help of CAN bus diagnostics software, the information of CAN messages is easy to read as it shown in Figure 5.15.

AmbientLightDriverSide				418.5607 lux	D3	This is the visible light (power density) falling on the vehicle driver side.						
0.099876	CAN 1	18FFB737x	ControlPanelforExternalLighting_CPEL				DriveLightingRequest_CPEL	CAN Frame	Rx	8	8	00 CC 50 F
SpotlightUpperSwitch				Off	0	Signal indicating if the switch for the upper spotlights is pressed.						
SpotlightLowerSwitch				Off	0	Signal indicating if the switch for the lower spotlights is pressed.						
FrontFoglightSwitch				Off	0	Signal indicating if the switch for the front foglights is pressed.						
RearFoglightSwitch				Off	0	Signal indicating if the switch for the rear foglights is pressed.						
WorklightSwitch				Off	0	Signal indicating if the switch for the worklight is pressed.						
SpareInputSwitch_Manoeuvering				NotAvailable	3	Signal indicating if the switch for the spare input is pressed.						
ManoeuveringLightSwitch				Off	0	Signal indicating if the switch for the manoeuvering light is pressed.						
RemoteMainBeamRequest				TakeNoAction	3							
MLSConnection2				Off	0	Signal indicating if the position lights on switch part of the main light switch is activated.						
MLSConnection3				Off	0	Signal indicating if the driving lights on switch part of the main light switch is activated.						
MLSConnection1				On	1	Signal indicating if the lights off switch part of the main light switch is activated.						
MLSConnection4				On	1	Signal indicating the 'automatic light on' switch position, part of the main light switch....						
HeadlampLevellingRequest				TakeNoAction	F	Signal indicating the driver selected headlamp leveling.						
HeadLampLvlSwitchStatus				NotAvailable	F	Signal indicating the status of the head lamp level switch.						
ApproachLightRequest				NotAvailable	3							
LightCheckRequest				NotAvailable	3							
VisibilitySignaling				TakeNoAction	F							
AlternatingMainBeamFlashRequest				TakeNoAction	3							
RemoteDrivingLightDeactivationRequest				TakeNoAction	3							
RemoteHornRequest				TakeNoAction	3							
RemoteWindscreenWiperRequest				TakeNoAction	3							
RemoteWorkLightRequest				TakeNoAction	3							
InternalError				NoInternalErrorDetected	0							
0.998767	CAN 1	CFF0437x	ControlPanelforExternalLighting_CPEL				AuxilaryWakeUpVisibility_CPEL	CAN Frame	Rx	8	8	FC FF FF F
WakeUp_VIS				NoWakeUp	0							
WakeUp_CPEL				TakeNoAction	3							
WakeUp_PBM_Default				TakeNoAction	3							
WakeUp_PBM10				TakeNoAction	3							
WakeUp_PBM9				TakeNoAction	3							
WakeUp_PBM8				TakeNoAction	3							
WakeUp_PBM7				TakeNoAction	3							
WakeUp_PBM6				TakeNoAction	3							
WakeUp_PBM5				TakeNoAction	3							
WakeUp_PBM4				TakeNoAction	3							
WakeUp_PBM3				TakeNoAction	3							
WakeUp_PBM2				TakeNoAction	3							
WakeUp_PBM1				TakeNoAction	3							

Fig. 5.15 CAN message sent by prototype.

After success in lab test, the function is verified by a field test. As Figure 5.16 shows, test truck's standard switch module is dismounted and prototype system connects to visibility system through CAN cables. According to truck's lamp shown in Figure 5.17, the lighting mode test on truck is successful too. More tests in different systems should be carried out in the future.

Fig. 5.16 Dismount the standard module.

Fig. 5.17 Truck's lamp indicate the lighting mode.

Chapter 6

Conclusions

Whole investigation is briefly reviewed and summarized in this last chapter. Three recommended schemes for the new control unit and their cost estimation are listed. Suggestions for future research direction are also given.

6.1 Summary of the investigation

Some important concepts of technical background are introduced: ECU's common structure, Controller Area Network protocal, SAE J1939 standards, characteristic of Scania electrical system and the comparison between customized truck development process and ordinary process, especially the detailed timeline of change request are analyzed which is highly relevant to special orders. Current challenges of customized truck development process is discussed in depth.

54 former special-order designs and 3 functions from other type of vehicles are listed and analyzed regarding hardware requirements. After classifying, 31 of them are able to be improved by introducing a new ECU. Furthermore, the developing functions of autonomous truck are taken into consideration. 6 important requirements from demands are concluded.

Special system for Scania customized bus's body and other companies' solution about bodywork are revealed. 50 types of ECU within Scania electrical system are investigated and thorough research is done on 13 Scania ECU developed internally. They are divided into 3 groups and their features like I/O type, I/O number, compiler, time cost for update are contrasted. Moreover, based on interview and research, the common software structure of a Scania ECU is extracted. It includes a "Brain" (High layer), a "Executor" (Middle layer) and a "Library" (Low layer). At last, 3 hardware are considered as good candidates for the new ECU and 3 hardware could be alternatives. As for programming platform, the two software are recommended.

Finally, a prototype is built and test to verify the capabilities of selected hardware. The system is built based on TMS ECU and 2 distinct special-order functions are im-

plemented. First function helps user control the direction and speed of a high-power DC motor by a press button switch. Second function combines the communication of different systems including CAN signal, voltage signal and PWM signal. It improves the control set and makes it more user friendly. Both functions pass the tests on rig and the second function works well on test truck. They embody the possibilities of a new ECU and stand for the future.

6.2 Three recommended schemes and cost estimation

In conclusion, there are 3 recommended schemes to solve the challenges nowadays according to investigation results. The real cost varies a lot depending on hardware, software and intended functionality. So 3 examples are listed as the reference for whom wants to invest in the future.

6.2.1 Participate in upgrading BICT

First and easiest way is participating in the projects at department of Bodywork Electrical System so as to further upgrade the BICT. Since customized truck developers are already skilled in using BICT and have much work practice, they have good understanding of which aspect needs to be improved. Another important advantage is BICT upgrading does not require as much human resource and budget as other schemes. For instance, the maintenance of BCI and BICT are carried out by BWE department and special-order team don't need to assign some people to manage them.

The corresponding disadvantage is special-order developers have to coordinate with BWE department's timetable. According to the meeting with BCI system owner, the lead time is about 18 to 27 time periods. Another shortcoming is no matter how the software is upgraded, BCI's hardware still have less amount and type of I/O compared with other new developed ECU. Because BCI has been introduced for some while. If special-order developers want to take part in its hardware update, the workload will be huge. Last but not least, since BCI is the only gateway for external bodybuilders and BICT is "a software designed for bodybuilders", many regulations have to be taken into account during developing and some functions won't be approved by BCI developer.

6.2.2 Develop a BWE external system

Second scheme is developing a ECU and connecting it with BWE through external CAN-bus (Blue CAN) as an external system, just like the Body Node System of customized bus body. An outstanding feature of this solution is developers can bypass some procedures of standard change request process and short the lead time, like Figure 4.4. What's more,

hardware with advanced I/O can be used so more I/O will be available comparing with BICT nowadays.

However, it is obvious that developing a new ECU system is a tough task. It needs a team of embedded system engineers, including hardware developers (e.g., in charge of driver, communication, memory and other modules), software programmers (e.g., responsible for different layers of software) and operators (e.g., dealing with maintenance). Besides, even though it has new features, it is still a subsystem of BWE, which means it is impossible to get more information or access beyond BCI. BCI will always be the ceiling for it.

6.2.3 Develop a new ECU in Yellow CAN bus

Last scheme is developing a new ECU and connecting it directly to Yellow CAN bus. Far more access and CAN message will be its distinct advantage. Although special-order developers have to go through standard change request procedure. It is possible to speed up some process by hard work. For example, because they have good knowledge of own new ECU, new functions' implementation can be faster and better. The better quality of implementation, the less time-cost for subsequent tests.

But as aforementioned, it is difficult to develop a new system. A big group is necessary. Another challenge is having direct connection with main CAN bus needs admission from electrical system architects and security architects. It is a prudent decision because it will affect all members in SESAMM. Numerous discussion, negotiation and integration test at complete vehicle level need to be done.

6.2.4 Comparison

Figure 6.1 compares the expense and expected lead time of a change request after implementation. Data is collected from several meetings with system owners, developers and integration test team.

The time cost of three schemes increase step by step and The material cost for upgrading software BICT is little. It is easy to understand because "Blue CAN" and "Yellow CAN" are developing new ECU system while "Upgrading BICT" is more about programming. The reason why second solution needs much human resource is BNS system has 3 kinds of hardware and independent lab for integration test. After listing the expected lead time of all three schemes, introducing a new ECU system has a huge advantage in contrast with just upgrading BICT.

Fig. 6.1 Expense and lead time comparison.

In author's opinion, at the present stage introducing a new system in Blue CAN is a better choice at the present stage. Even if engineers upgrading BICT and add some new functions, they still need to repeat this process and cooperate with BCI team when new problem arises. Besides, it is hard to join SESAMM by connecting to Yellow CAN bus directly, especially for speaicl-oder designers who are not expert at embedded system and systematic architecture design. Although "Blue CAN" method needs expanding the team, if they reduce the number and scale of hardware, the cost may be acceptable compared with the profit increased by shorter lead time.

6.3 Suggestions for further work

6.3.1 Deeply understand the development process of Scania embedded system

As stated above, weather developing a new ECU system or upgrading an application, it needs countless hour's work of experienced developers. Considering the designers of customized truck's system are unfamiliar with embedded system development. One suggestion for future work is improving competence by studying and deeply understanding the development process of Scania embedded system. The competence includes several aspects, such as embedded system software, functional specifications, hardware testing.

6.3.2 Clear definition of desired access for the new ECU

Another suggestion for further research is seriously study safety regulations and clearly defining the desired access for the new ECU. If special-order designers want their system to join “the ECU familiy”, SESAMM, in the future, the permission from system architects is a must. A clear definition of desired access will indicate the “boundary” of ECU’s functionality and help designers get architects’ admission. For example, BICT is the “boundary” for customized truck’s software function nowadays.

Appendix A

Tables of investigation results

(Contents are hided because of confidential)

Table A.1: Detailed requirements of customized functions

Function description	Related compo-nents	Requirement overview	Necessary I/O

TableA.1 (continue)

Function description	**Related components**	**Requirement overview**	**Necessary I/O**

TableA.1 (continue)

Function description	**Related components**	**Requirement overview**	**Necessary I/O**

TableA.1 (continue)

Function description	**Related components**	**Requirement overview**	**Necessary I/O**

Table A.10: Detailed description of TMS ECU I/O

Function name	**Pin number**	**I/O type**

TableA.10 (continue)

Function name	**Pin number**	**I/O type**

TableA.10 (continue)

Function name	**Pin number**	**I/O type**

TableA.10 (continue)

Function name	**Pin number**	**I/O type**

Table A.2: Collection of former designs for Generation 5

ECO ID	Diagram ID	Function description

Table A.3: BBM connector 1

Designation	**Default function**	**Type**

Table A.4: BBM connector 2

Designation	Default function	Type

Table A.5: BBM connector 3

Designation	Default function	Type

Table A.6: ECU and System list

ECU name	System name	Developed internally?

Table A.7: ECU list (Part 1)

Fuse type
System name
Number of pins (exclude power supply)
Type of input
Type of output
Serial interface
Program Language and Compiler
Standard time for SSCR
Merits
Demerits

Table A.8: ECU list (Part 2)

Fuse type
System name
Number of pins (exclude power supply)
Type of input
Type of output
Serial interface
Program Language and Compiler
Standard time for SSCR
Merits
Demerits

Table A.9: ECU list (Part 3)

System name		
Number of pins (exclude power supply)		
Type of input		
Type of output		
Serial interface		
Program Language and Compiler		
Standard time for SSCR		
Merits		
Demerits		

Bibliography

[1] Hans-Jörg Bullinger, F Fremerey, and J Fuhrberg-Baumann. Innovative production structuresâprecondition for a customer-orientated production management. *International journal of production economics*, 41(1-3):15–22, 1995.

[2] Richard N Langlois. Modularity in technology and organization. *Journal of economic behavior & organization*, 49(1):19–37, 2002.

[3] Madeleine Björk and Emma Hällfors. The concept of modularization and the definition of a module: An investigation and comparison of two successful companies within the automotive industry, 2015.

[4] Amos Albert et al. Comparison of event-triggered and time-triggered concepts with regard to distributed control systems. *Embedded world*, 2004:235–252, 2004.

[5] Scania CV AB. General information on can. *Scania Truck Bodybuilder*, 10753(1), 2016.

[6] Mohammad Farsi, Karl Ratcliff, and Manuel Barbosa. An overview of controller area network. *Computing & Control Engineering Journal*, 10(3):113–120, 1999.

[7] Gianluca Cena and Adriano Valenzano. An improved can fieldbus for industrial applications. *IEEE transactions on industrial electronics*, 44(4):553–564, 1997.

[8] L-B Fredriksson. Can for critical embedded automotive networks. *Ieee Micro*, 22 (4):28–35, 2002.

[9] Ho-Seek Choi and Jang-Myung Lee. A distributed precedence queue mechanism to assign efficient bandwidth in can networks. *environment*, 3(4):5, 2004.

[10] Ricardo De Andrade, Kleber N Hodel, João Francisco Justo, Armando M Laganá, Max Mauro Santos, and Zonghua Gu. Analytical and experimental performance evaluations of can-fd bus. *IEEE Access*, 6:21287–21295, 2018.

[11] Copperhill Technologies Corporation. A brief introduction to controller area network. `https://copperhilltech.com/`

a-brief-introduction-to-controller-area-network/. Accessed October 16, 2018.

[12] Bong-Ju Ahn, Byung-Ryuel Park, Young-Hoon Ki, Gu-Min Jeong, Hyun-Sik Ahn, and Do-Hyun Kim. Development of a controller area network interface unit and its application to a fuel cell hybrid electric vehicle. In *SICE-ICASE, 2006. International Joint Conference*, pages 5545–5549. IEEE, 2006.

[13] CSS Electronics. Can bus explan - a simple intro (2018). https://www.csselectronics.com/screen/page/simple-intro-to-can-bus/language/en. Accessed October 17, 2018.

[14] Keith Pazul. Controller area network (can) basics. *Microchip Technology Inc*, 1, 1999.

[15] Markus Junger. Introduction to j1939. *Vector, version*, 1:1–11, 2010.

[16] Peter Fellmeth and Holger Söhnle. Quo vadis sae j1939 standardization.

[17] Scania CV AB. Can interface for bodywork. *Scania Truck Bodybuilder*, 2(22), 2017.

[18] Daniel Sundmark, Kai Petersen, and Stig Larsson. An exploratory case study of testing in an automotive electrical system release process. In *Industrial Embedded Systems (SIES), 2011 6th IEEE International Symposium on*, pages 166–175. IEEE, 2011.

[19] Johan Svahn. Funktionsutveckling scanias elsystem. *Scania ECU education*, 1(6), 2018.

[20] Scania CV AB. Bodywork adaptation. *Scania Truck Bodybuilder*, 1(1), 2002.

[21] Scania CV AB. Images of scania vehicles. https://media.scania.com/fotoweb/, . Accessed November 1, 2018.

[22] Scania CV AB. Bci - bodywork communication interface. *Scania Truck Bodybuilder*, 10618(1), 2016.

[23] Scania CV AB. Bodywork interface. *Scania Truck Bodybuilder*, 10599(2), 2017.

[24] Scania CV AB. Instructions. https://truckbodybuilder.scania.com/, . Accessed November 2, 2018.

[25] ZEITLAUF. Bstandard modular system. https://docplayer.net/53760972-Standard-modular-system-2016.html. Accessed November 14, 2018.

[26] J Connelly, WS Hong, RB Mahoney, and DA Sparrow. Current challenges in autonomous vehicle development. In *Unmanned Systems Technology VIII*, volume 6230, page 62300D. International Society for Optics and Photonics, 2006.

[27] Scania CV AB. Scania and ahola transport agree on semi-autonomous platooning. https://www.scania.com/group/en/scania-and-ahola-transport-agree-on-semi-autonomous-platooning/, . Accessed November 28, 2018.

[28] Scania CV AB. 160510en autotrucks. https://www.scania.com/group/en/documents-autonomous-transport-systems/, . Accessed November 16, 2018.

[29] Scania CV AB. Autonomous transport system. https://www.scania.com/group/en/documents-autonomous-transport-systems/, . Accessed November 16, 2018.

[30] Tony Lindgren. Troubleshooting ecu programmed by bodybuilders. In *Connected Vehicles and Expo (ICCVE), 2012 International Conference on*, pages 231–236. IEEE, 2012.

[31] EN50325 CENELEC. Industrial communication subsystem based on iso 11898 (can) for controller-device interfaces. Technical report, Parts 1-2-3, 1999.

[32] Lauro R Nunes, João NH da Rosa, Taysa M Banik, João H Neme, Felipe R Franco, and Max M Santos. Design of a embedded software controller for a mobile seat platform for commercial vehicle. In *Industry Applications (INDUSCON), 2016 12th IEEE International Conference on*, pages 1–7. IEEE, 2016.

[33] Ned Mohan and Tore M Undeland. *Power electronics: converters, applications, and design*. John Wiley & Sons, 2007.

[34] Hsin-Chuan Chen and Rong-San Lin. Design of an h-bridge driver without dead-time generation using gate bias. *IEICE Electronics Express*, 10(19):20130656–20130656, 2013.

[35] Guanzhi technology. Electric motor driving module gz-pmdc-120a5t. https://item.taobao.com/item.htm?spm=a1z09.2.0.0.3e1f2e8d0Hw2eg&id=569227201871&_u=2mkngac52fd. Accessed December 2, 2018.

TRITA-EECS-EX-2019:8
www.kth.se