Rubinius

Rubini us

Rubini.us

rubini.us

http://rubini.us

Rubinius

http://godfat.org/slides/2008-12-21-rubinius.pdf

History and Design Goals

Architecture and Object Model

History and Design Goals

Architecture and Object Model

Evan Phoenix

February of 2006

RubySpec

MSpec

Engine Yard

C VM Shotgun

~~C VM~~ Shotgun

✓ C++ VM

CxxTest

LLVM

History and Design Goals

Architecture and Object Model

Reliable, Rock Solid Code

Reliable, Rock Solid Code

Full Test Coverage

健康

Clean, Readable Code

Clean, Readable Code

Little Lines in Each File

Clean, Readable Code

Macro, Code Generator, Rake Task

Clean, Readable Code

CMake

Clean, Readable Code

~~CMake~~

Clean, Readable Code

C++ Object to Ruby Object 1 to 1 Mapping

清新

健康

清新

Modern Techniques

Modern Techniques

Pluggable Garbage Collectors

Modern Techniques

Pluggable Garbage Collectors

- Stop-and-Copy

Modern Techniques

Pluggable Garbage Collectors

- Stop-and-Copy
- Mark-and-Sweep

Modern Techniques

Optimizers

Modern Techniques

Git, Rake, LLVM

Squeak

the Smalltalk-80 Implementation

Squeak

Slang

Squeak

- Alan Kay
- Dan Ingalls
- Adele Goldberg

Smalltalk

Xerox PARC

Smalltalk

Object-Oriented
(differ from Simula and C++)

Smalltalk

GUI

Smalltalk

MVC

History and Design Goals

Architecture and Object Model

Real Machine

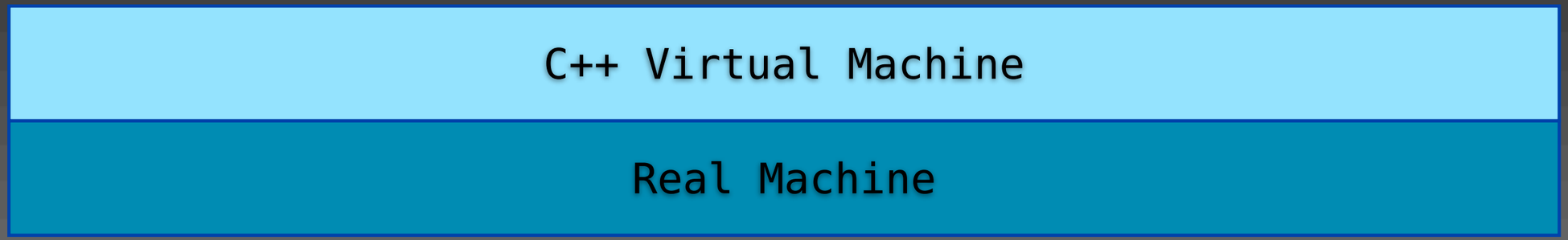
C++ Virtual Machine
Real Machine

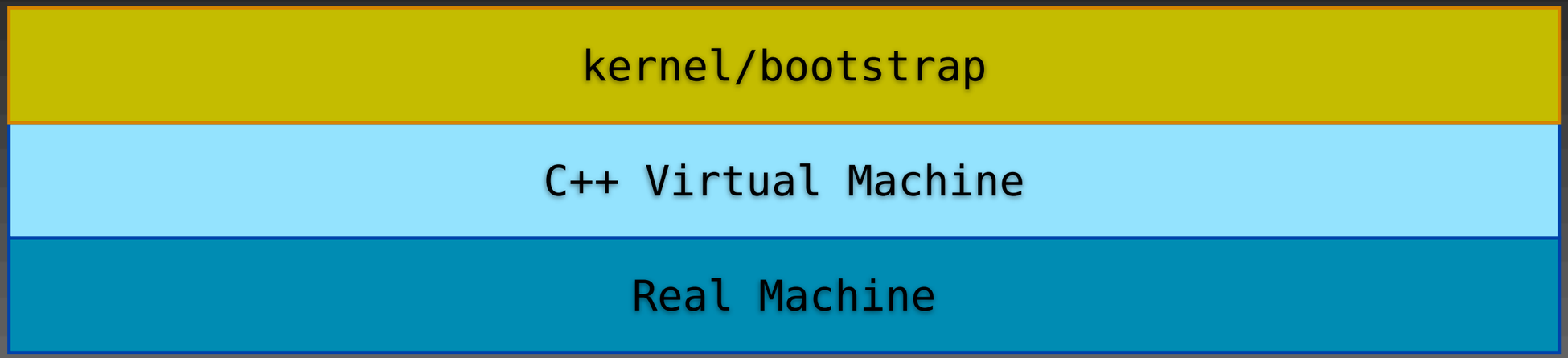
kernel/bootstrap
C++ Virtual Machine
Real Machine

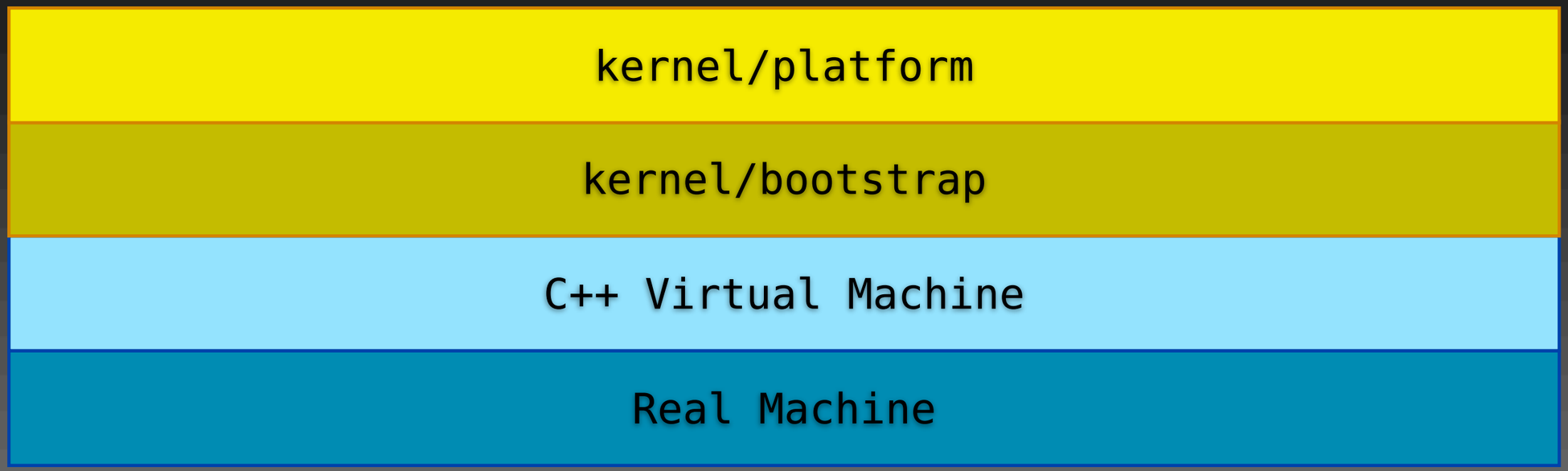
kernel/platform
kernel/bootstrap
C++ Virtual Machine
Real Machine

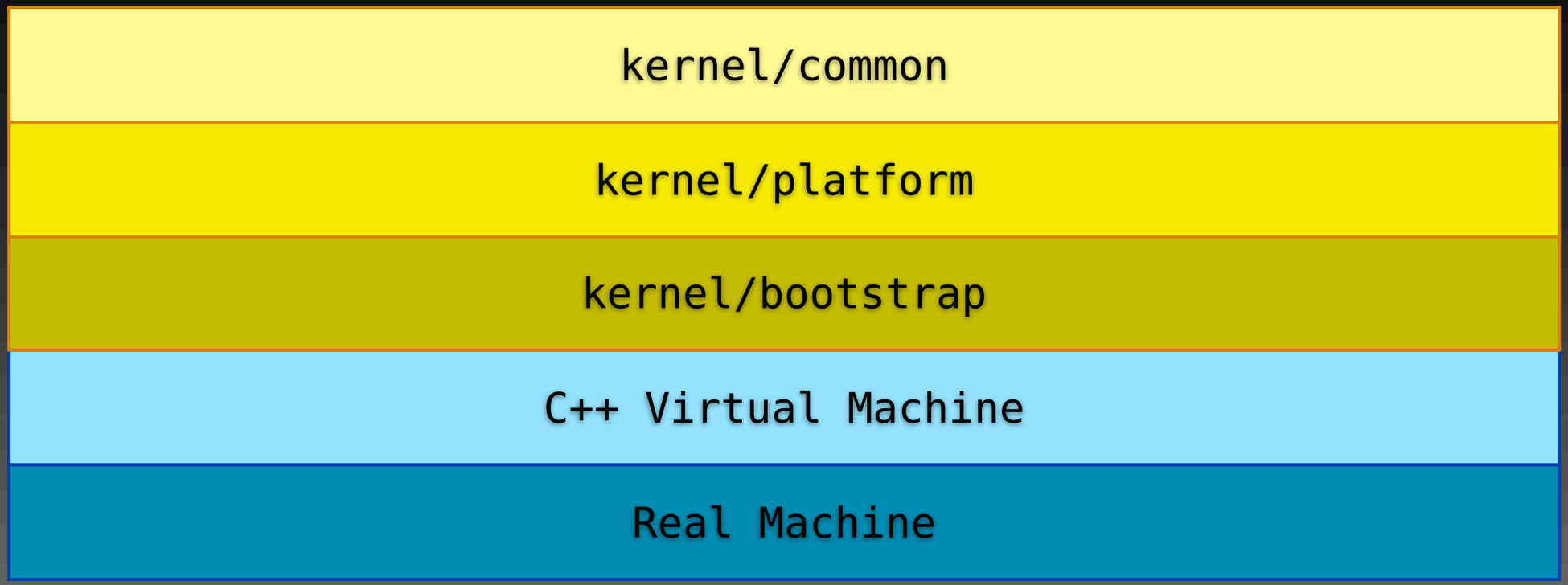
kernel/common
kernel/platform
kernel/bootstrap
C++ Virtual Machine
Real Machine

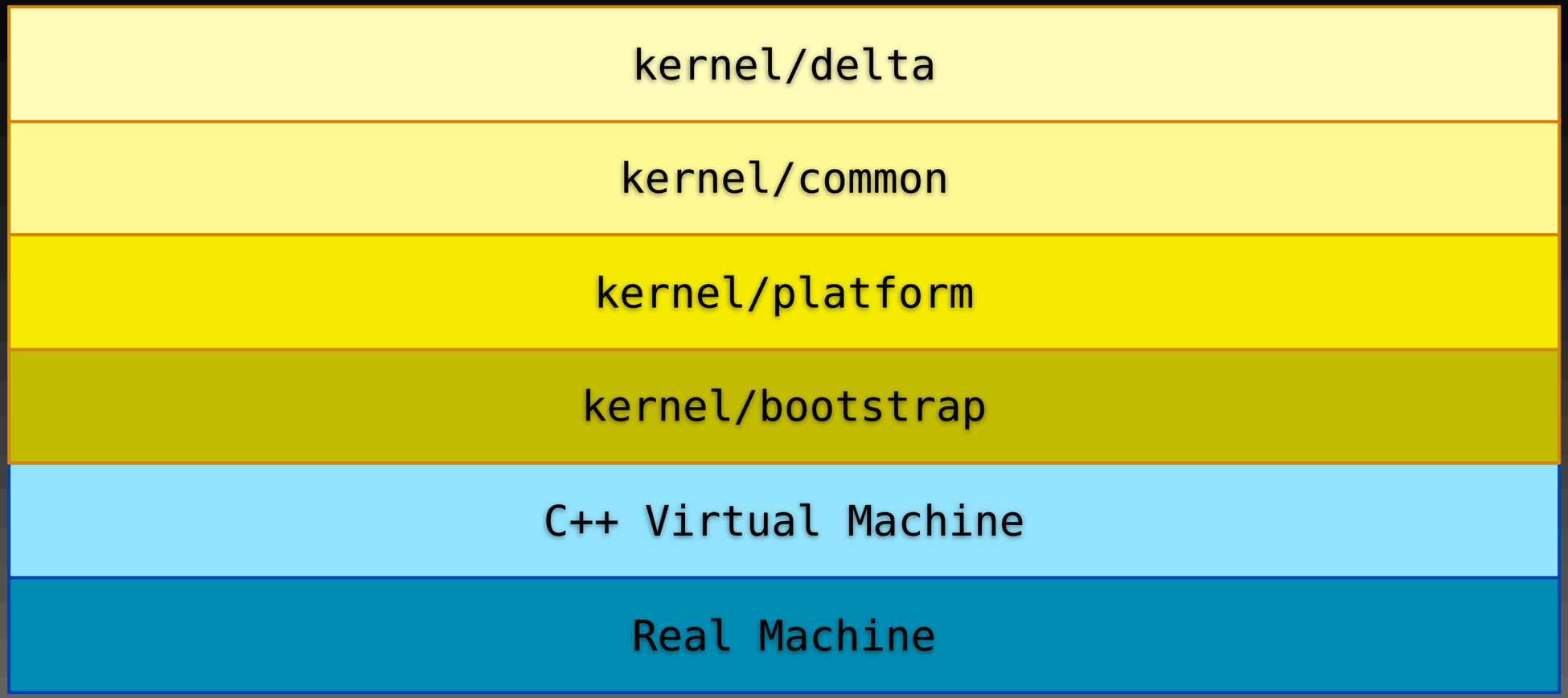
kernel/delta
kernel/common
kernel/platform
kernel/bootstrap
C++ Virtual Machine
Real Machine

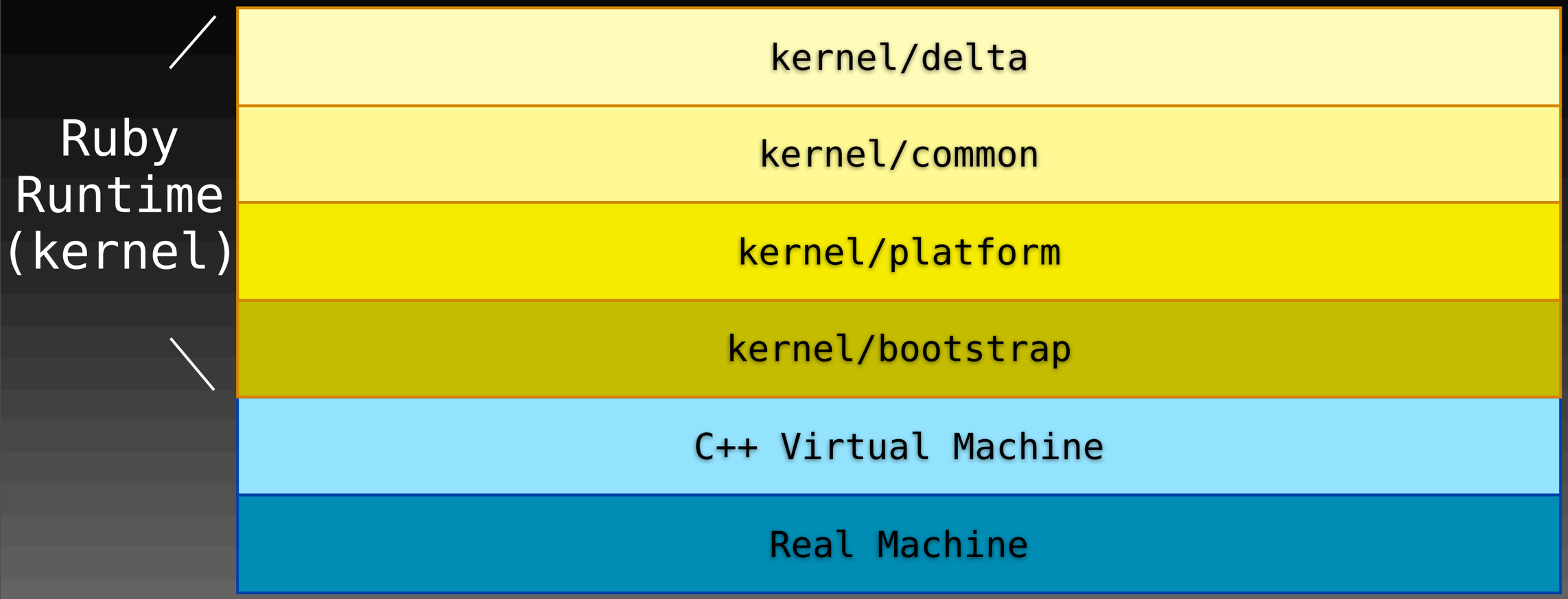
Ruby
Runtime
(kernel)
kernel/delta
kernel/common
kernel/platform
kernel/bootstrap
C++ Virtual Machine
Real Machine

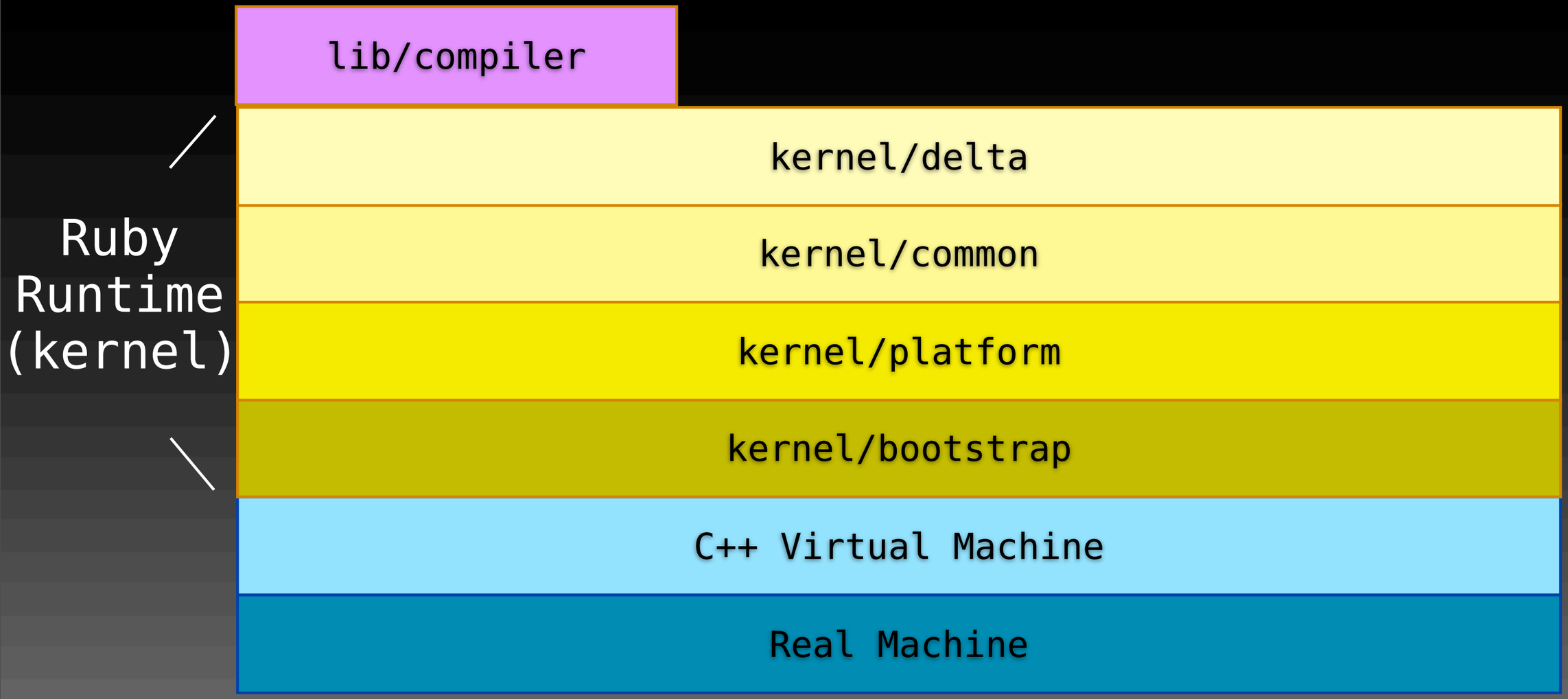
lib/compiler
kernel/delta
kernel/common
kernel/platform
kernel/bootstrap
C++ Virtual Machine
Real Machine
Ruby
Runtime
(kernel)

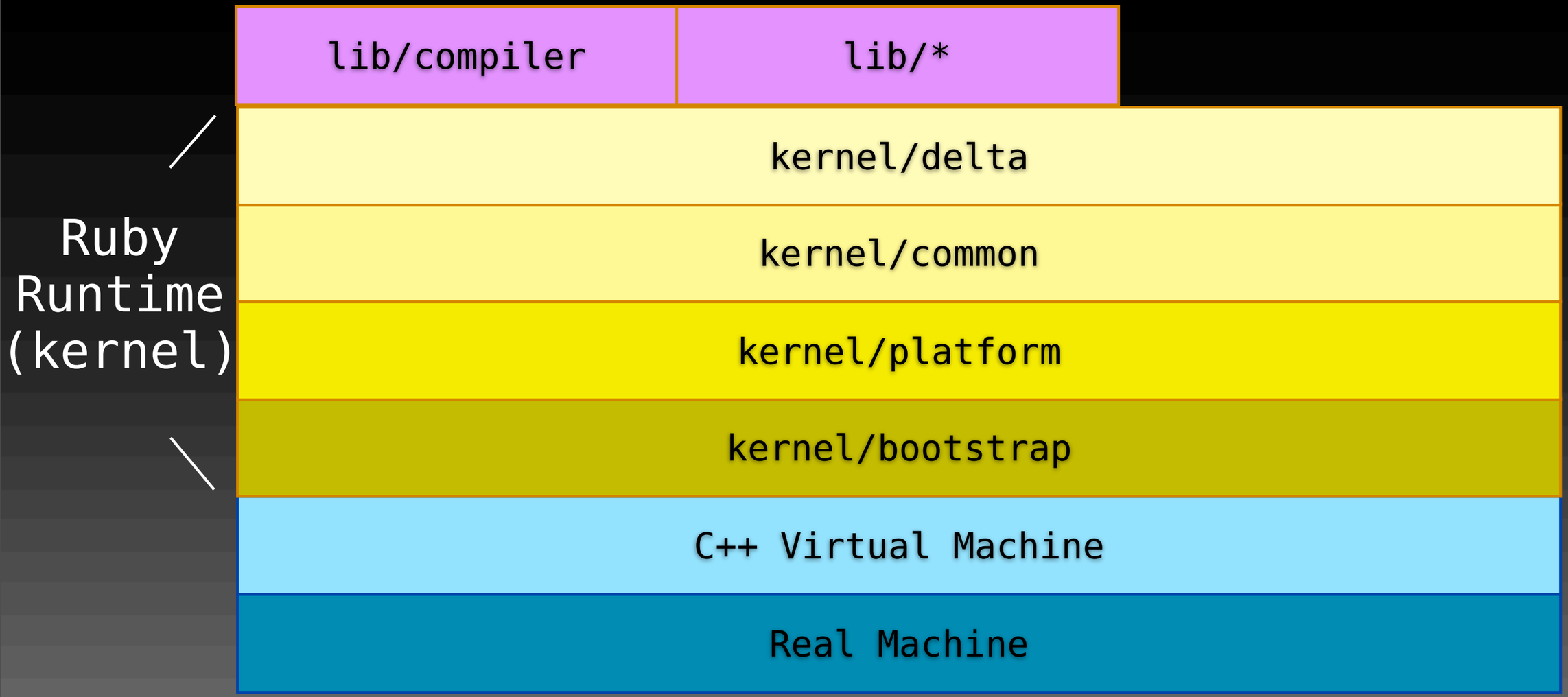
lib/compiler
lib/*
kernel/delta
kernel/common
kernel/platform
kernel/bootstrap
C++ Virtual Machine
Real Machine
Ruby
Runtime
(kernel)

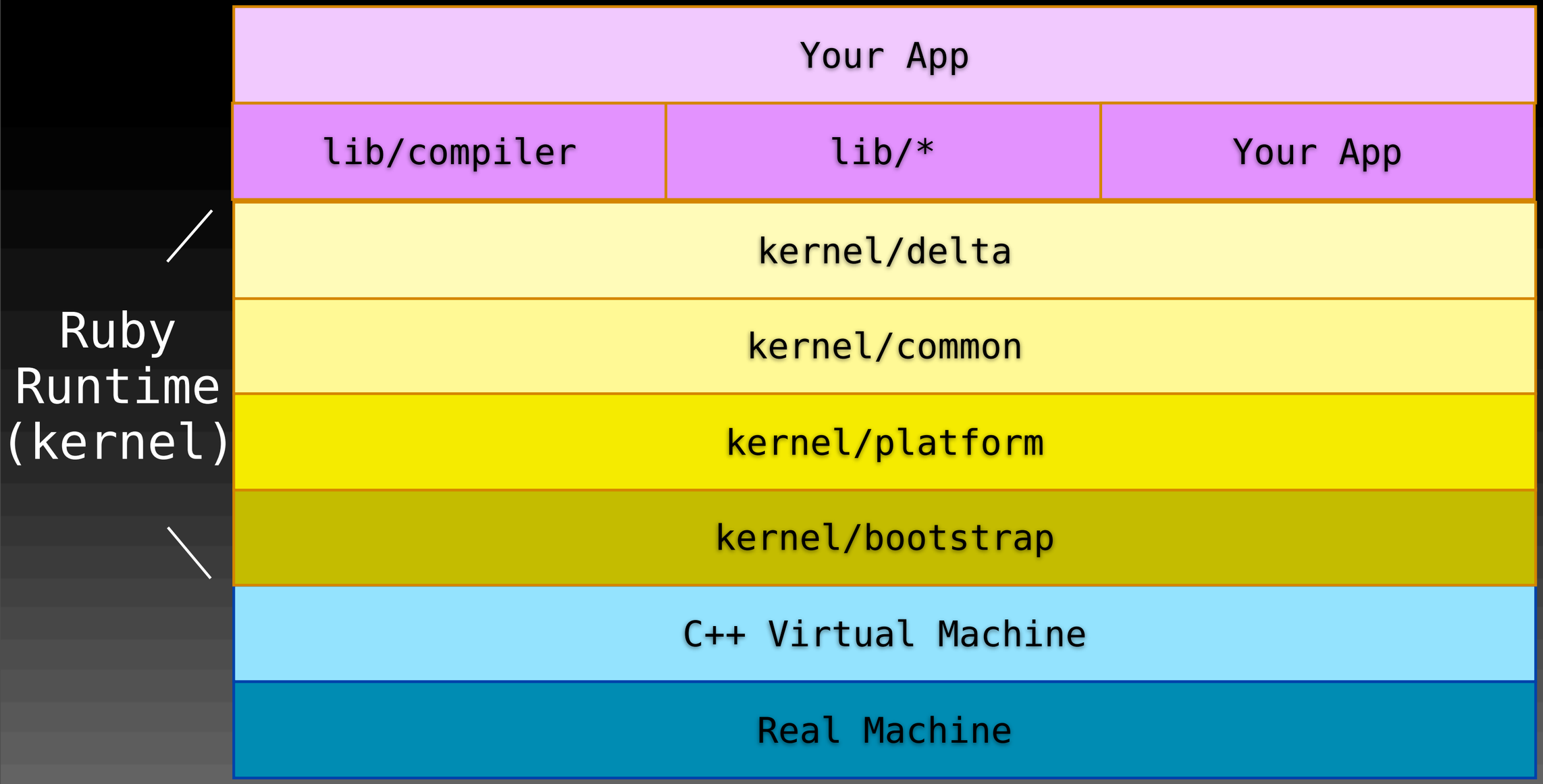
Your App
lib/compiler
lib/*
Your App
kernel/delta
kernel/common
kernel/platform
kernel/bootstrap
C++ Virtual Machine
Real Machine
Ruby
Runtime
(kernel)

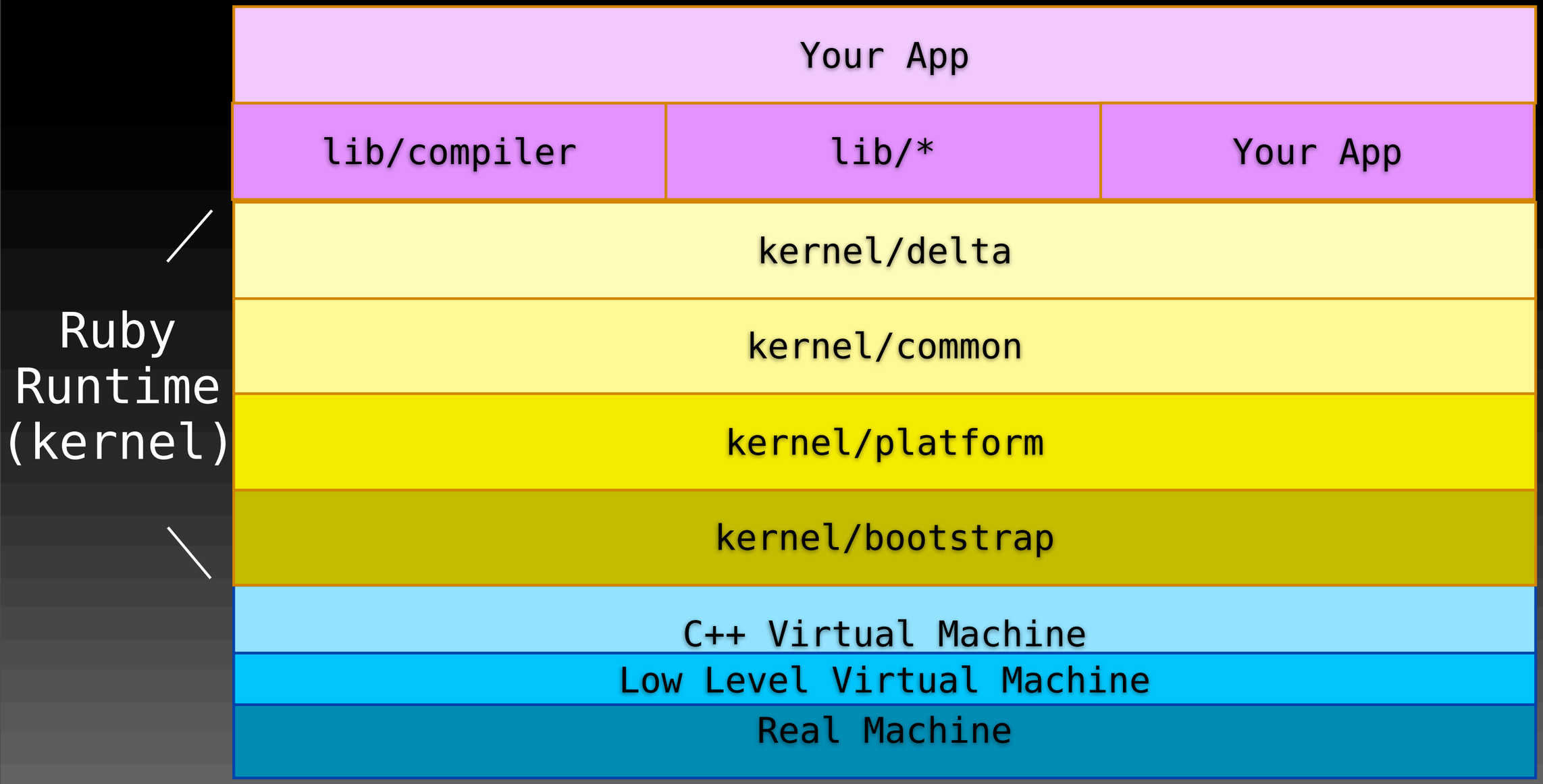
Your App
lib/compiler
lib/*
Your App
kernel/delta
kernel/common
kernel/platform
kernel/bootstrap
C++ Virtual Machine
Low Level Virtual Machine
Real Machine
Ruby
Runtime
(kernel)

Outside the Ruby World

Outside the Ruby World

C++ Primitives

Outside the Ruby World

Foreign Function Interface - FFI

Outside the Ruby World

Subtend

History and Design Goals

Architecture and Object Model

Hello

World!

```
def       method_missing m; puts m;          end
def Object.const_missing c; print "#{c}, "; end
```

```
Hello.World!
```

```
puts ‘Hello, World!’
```

```
puts ‘Hello, World!’
self.send :puts, ‘Hello, World!’
```

```
(TOPLEVEL_BINDING.context.receiver ||
 MethodContext.current.receiver  )
```

TOPLEVEL

```
puts ‘Hello, World!’
self.send :puts, ‘Hello, World!’
```

TOPLEVEL

```
(TOPLEVEL_BINDING.context.receiver ||
    MethodContext.current.receiver  )
```

```
def __script__

    puts ‘Hello, World!’
  self.send :puts, ‘Hello, World!’


end
```

CompiledMethod (method(:__script__).compiled_method)

```
def __script__

    puts ‘Hello, World!’


end
```

CompiledMethod (method(:__script__).compiled_method)

```
def __script__

    puts ‘Hello, World!’
     #<SendSite:0x26 name=puts
                hits=0 misses=0>

end
```

CompiledMethod (method(:__script__).compiled_method)

```
def __script__
        print ‘Hello,‘

        print ‘World!‘

end
```

CompiledMethod (method(:__script__).compiled_method)

```
def __script__
    print 'Hello,'
#<SendSite:0x26 name=print
          hits=0 misses=0>
    print 'World!'
#<SendSite:0x28 name=print
          hits=0 misses=0>
end
```

CompiledMethod (method(:__script__).compiled_method)

```
def __script__
        print ‘Hello,‘

        print ‘World!‘

end
```

CompiledMethod (method(:__script__).compiled_method)

```
def __script__
    print ‘Hello,‘
#<SendSite:0x26 name=print
                hits=0 misses=0>
    print ‘World!‘

end
```

CompiledMethod (method(:__script__).compiled_method)

```
def __script__
    print 'Hello,'
#<SendSite:0x26 name=print
          hits=0 misses=0>
    print 'World!'
#<SendSite:0x28 name=print
          hits=0 misses=0>
end
```

CompiledMethod (method(:__script__).compiled_method)

```
def __script__
        print ‘Hello,‘

        print ‘World!‘

end
```

CompiledMethod (method(:__script__).compiled_method)

```
def __script__
    print ‘Hello,‘
#<SendSite:0x26 name=print
                hits=1 misses=0>
    print ‘World!‘

end
```

CompiledMethod (method(:__script__).compiled_method)

```
def __script__
    print 'Hello,'
#<SendSite:0x26 name=print
          hits=1 misses=0>
    print 'World!'
#<SendSite:0x28 name=print
          hits=1 misses=0>
end
```

```
class C
  def print
  end
end
```

CompiledMethod (method(:__script__).compiled_method)

```
def __script__
        print ‘Hello,‘

        print ‘World!‘

end
```

CompiledMethod (method(:__script__).compiled_method)

```
def __script__
    print ‘Hello,‘
#<SendSite:0x26 name=print
                hits=0 misses=0>
    print ‘World!‘

end
```

CompiledMethod (method(:__script__).compiled_method)

```
def __script__
    print 'Hello,'
#<SendSite:0x26 name=print
          hits=0 misses=0>
    print 'World!'
#<SendSite:0x28 name=print
          hits=0 misses=0>
end
```

CompiledMethod (method(:__script__).compiled_method)

```
def __script__
        print ‘Hello,‘

        print ‘World!‘

end
```

CompiledMethod (method(:__script__).compiled_method)

```
def __script__
    print ‘Hello,‘
#<SendSite:0x26 name=print
                hits=1 misses=0>
    print ‘World!‘

end
```

CompiledMethod (method(:__script__).compiled_method)

```
def __script__
    print 'Hello,'
#<SendSite:0x26 name=print
          hits=1 misses=0>
    print 'World!'
#<SendSite:0x28 name=print
          hits=1 misses=0>
end
```

Visual Paradigm for UML Community Edition [not for commercial use]

Ruby Object Model (Labyrinth?)

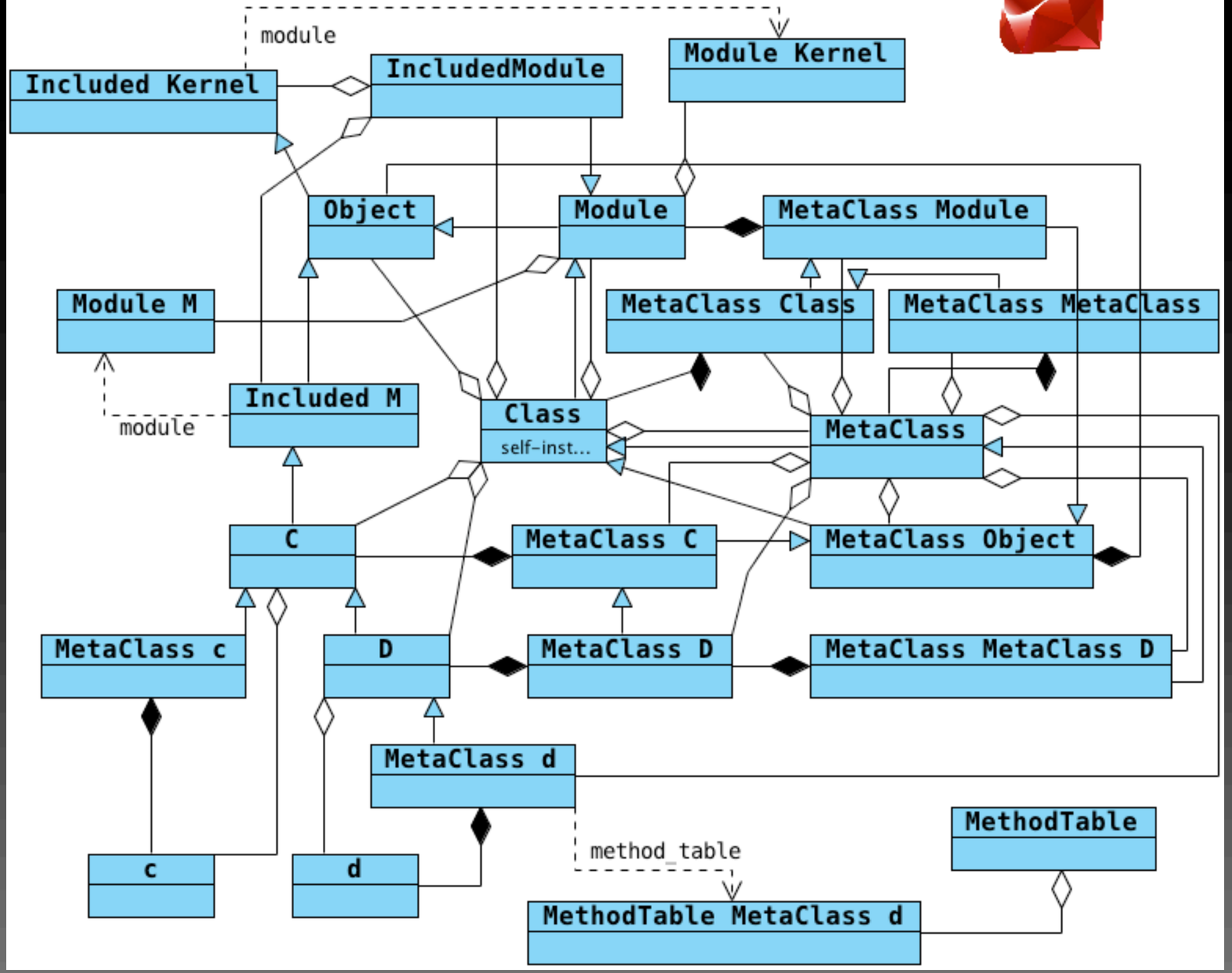

- CompiledMethod
- MethodContext
- StaticScope
- SendSite
- MethodTable
- LookupTable

Method Dispatch

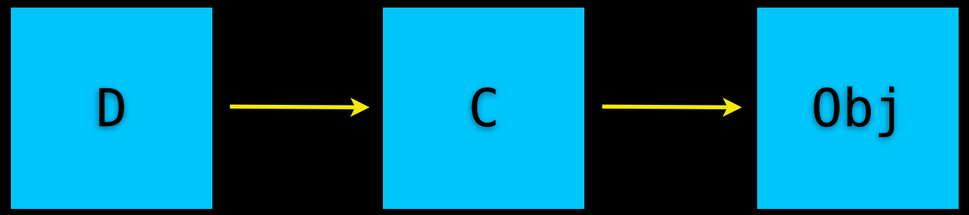
D
C
Obj

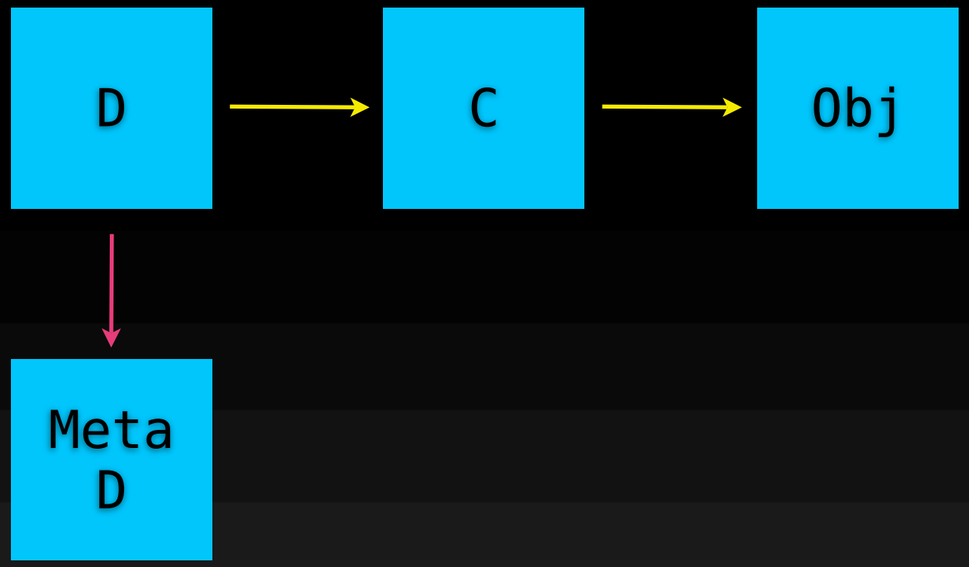
D
C
Obj
Meta
D

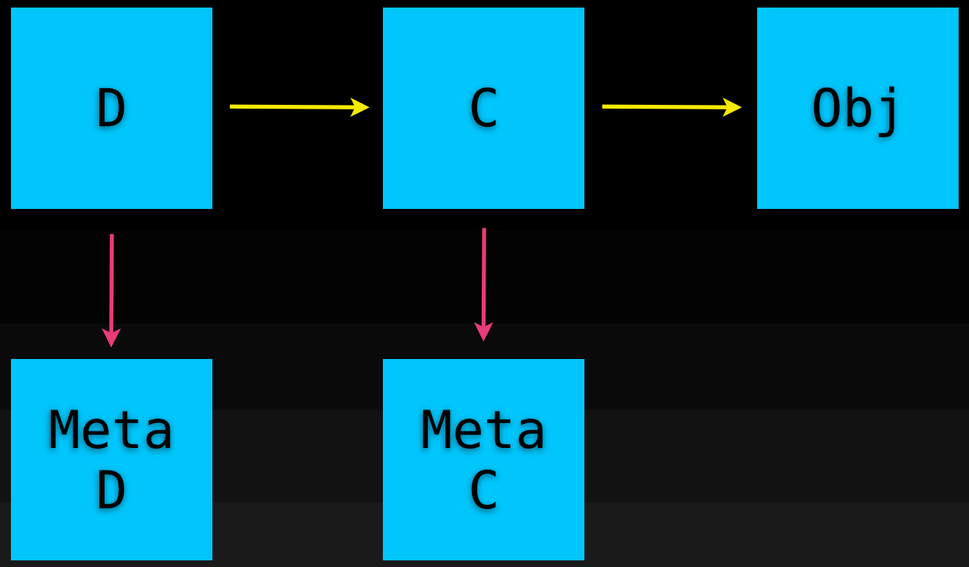
D
C
Obj
Meta
D
Meta
C

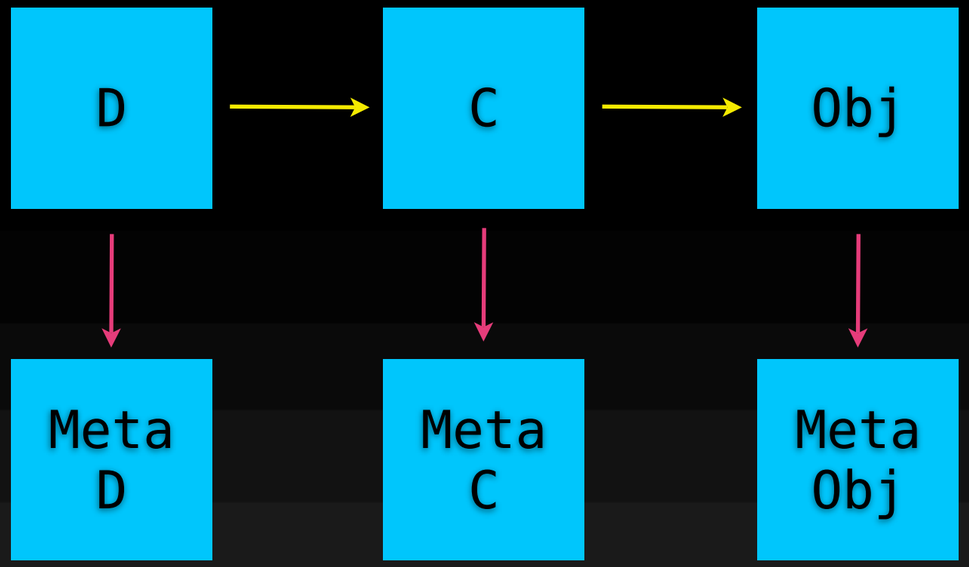
D
C
Obj
Meta D
Meta C
Meta Obj

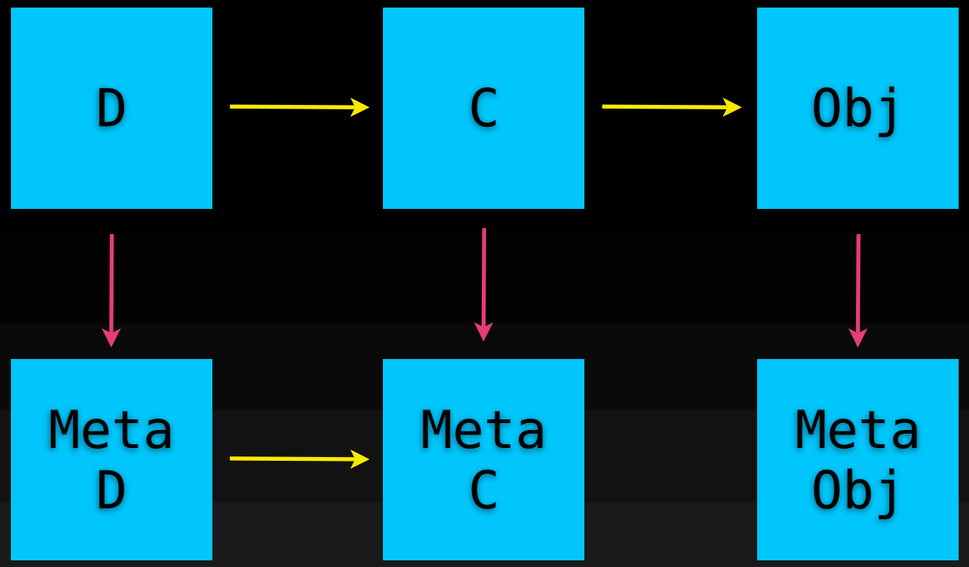
D
C
Obj
Meta D
Meta C
Meta Obj

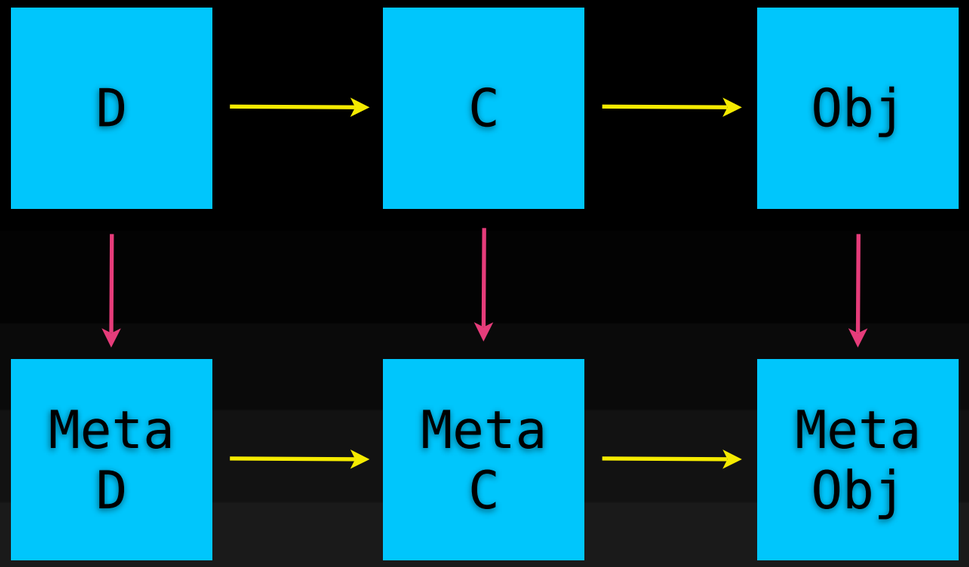
D
C
Obj
Meta D
Meta C
Meta Obj

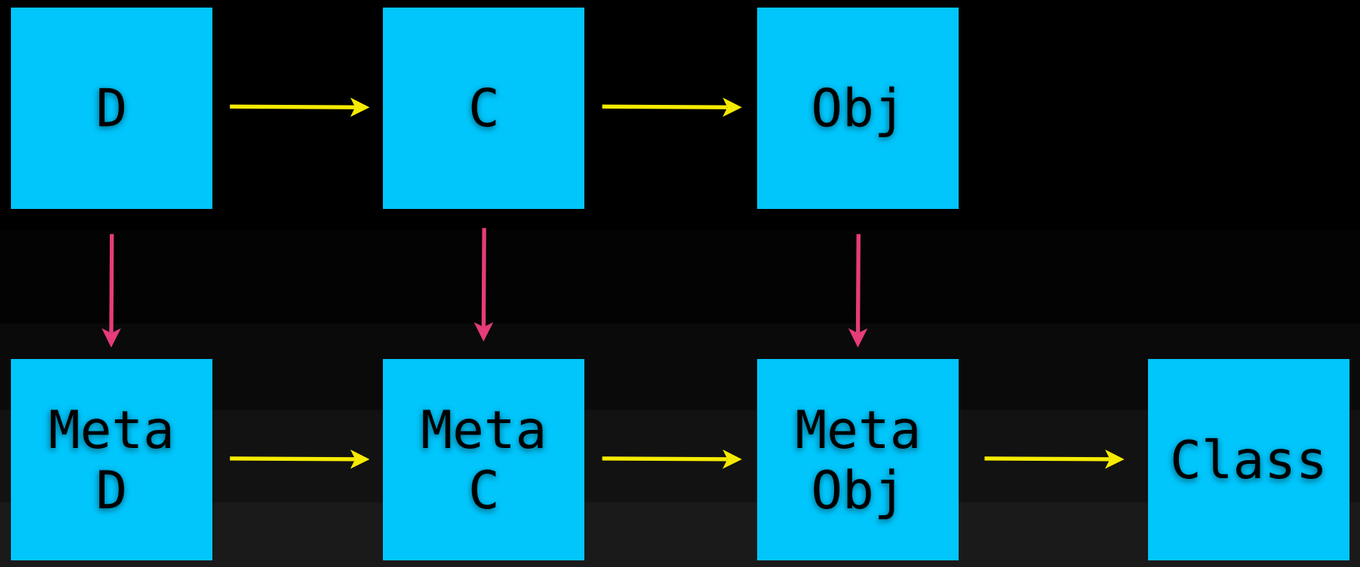
D
C
Obj
Meta D
Meta C
Meta Obj
Class

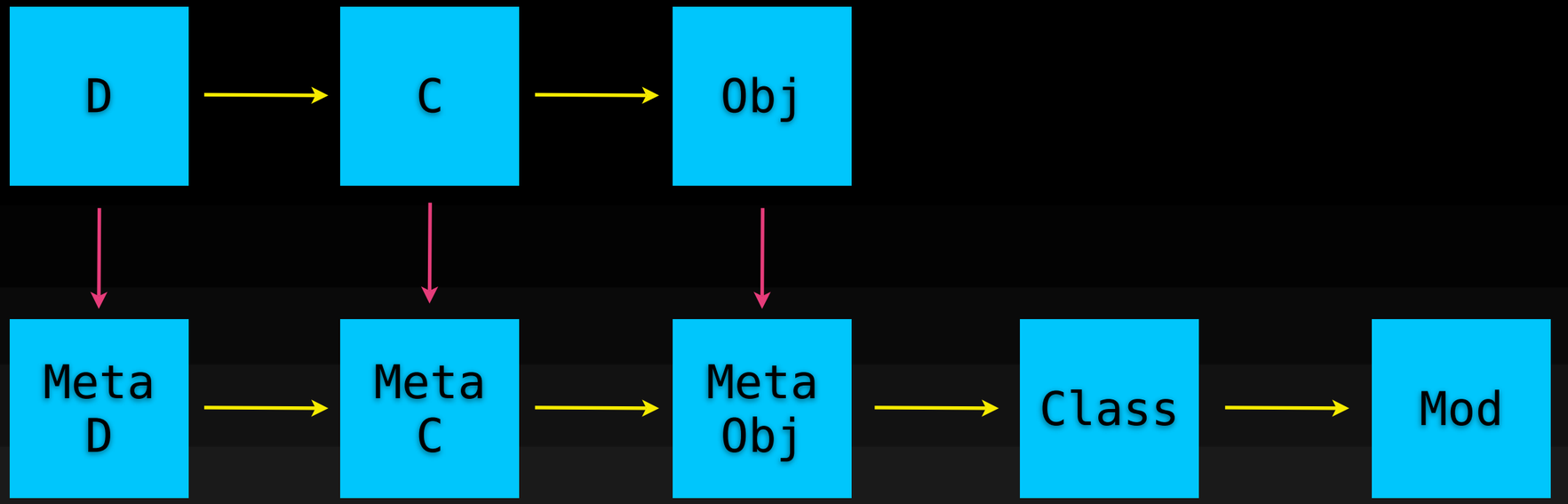
D
C
Obj
Meta D
Meta C
Meta Obj
Class
Mod

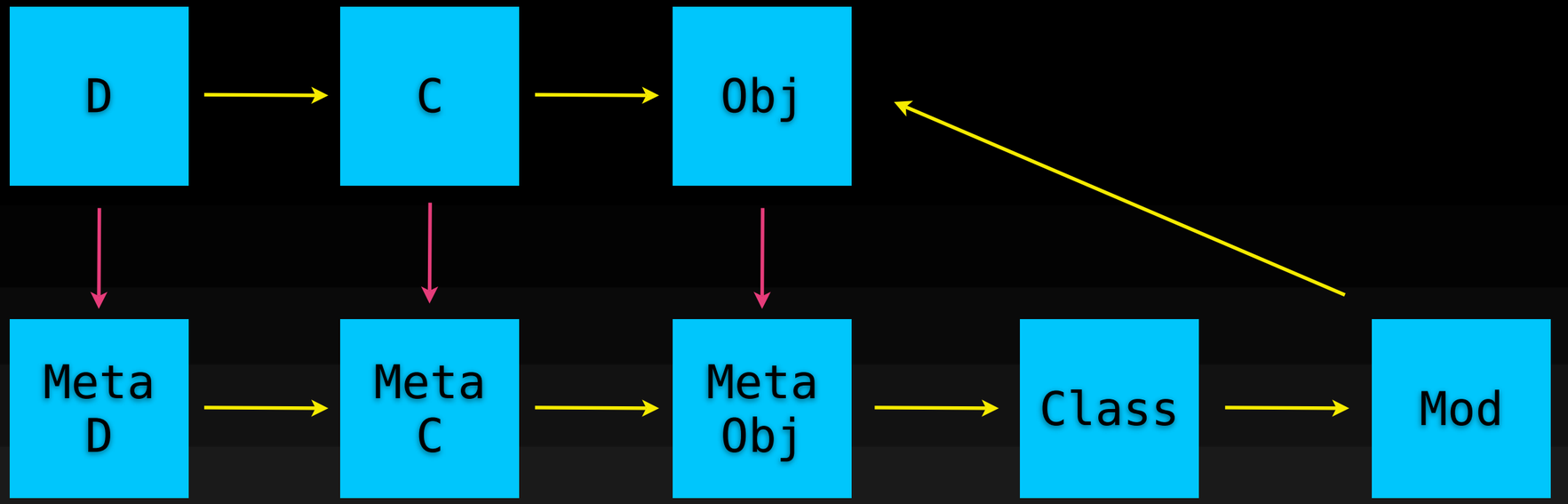
D
C
Obj
Meta D
Meta C
Meta Obj
Class
Mod

Meta
D
Meta
C
Meta
Obj
Class
Mod

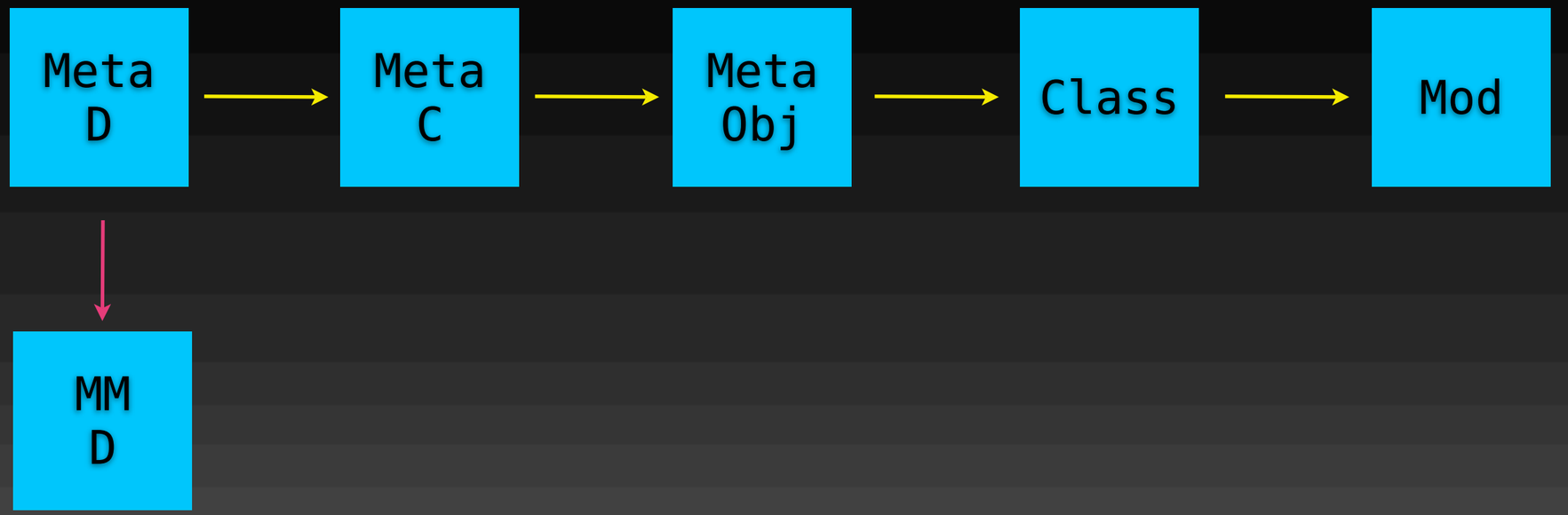
Meta
D
Meta
C
Meta
Obj
Class
Mod
MM
D

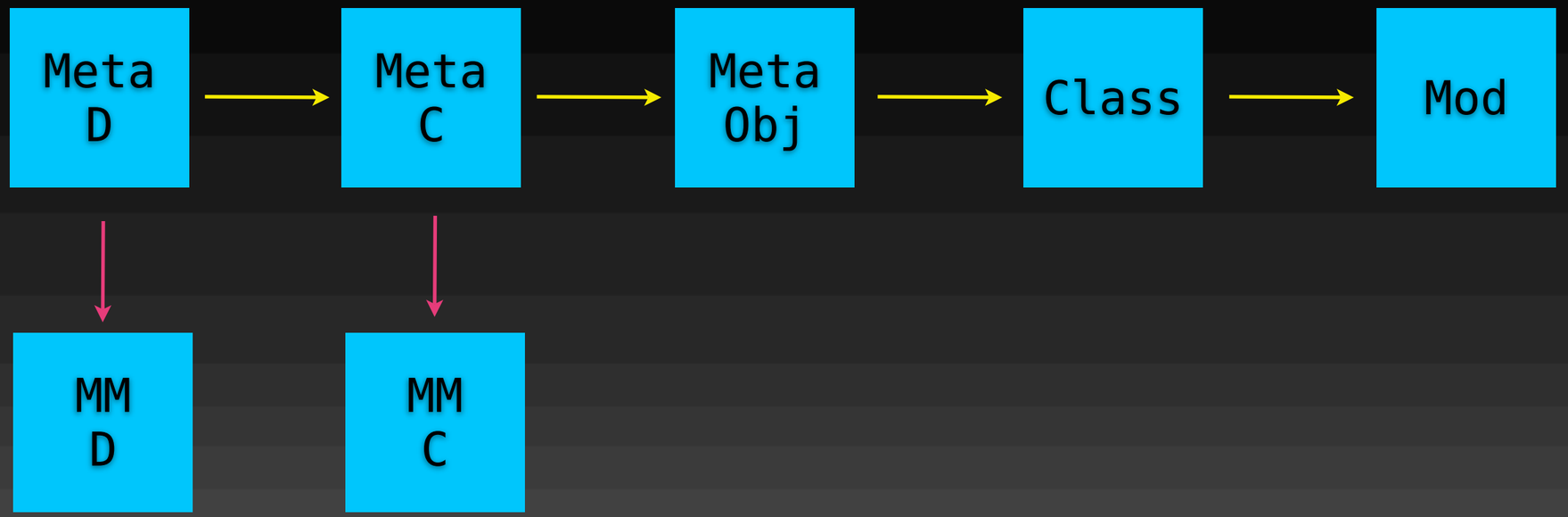
Meta
D
Meta
C
Meta
Obj
Class
Mod
MM
D
MM
C

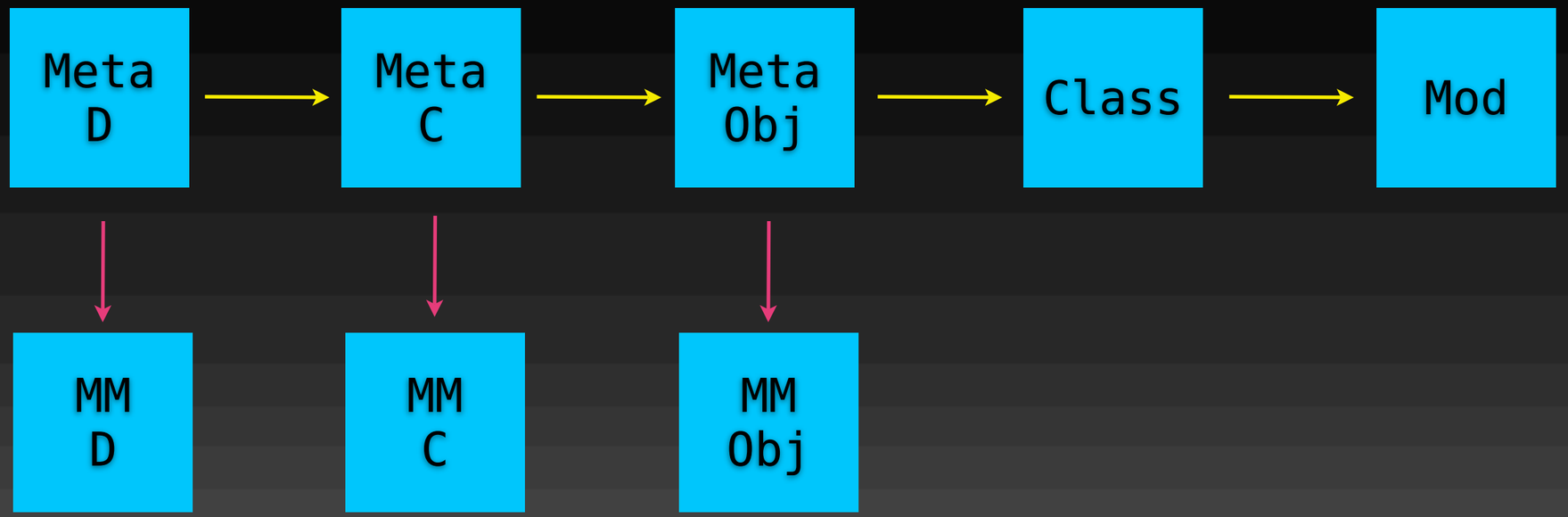
Meta
D
Meta
C
Meta
Obj
Class
Mod
MM
D
MM
C
MM
Obj

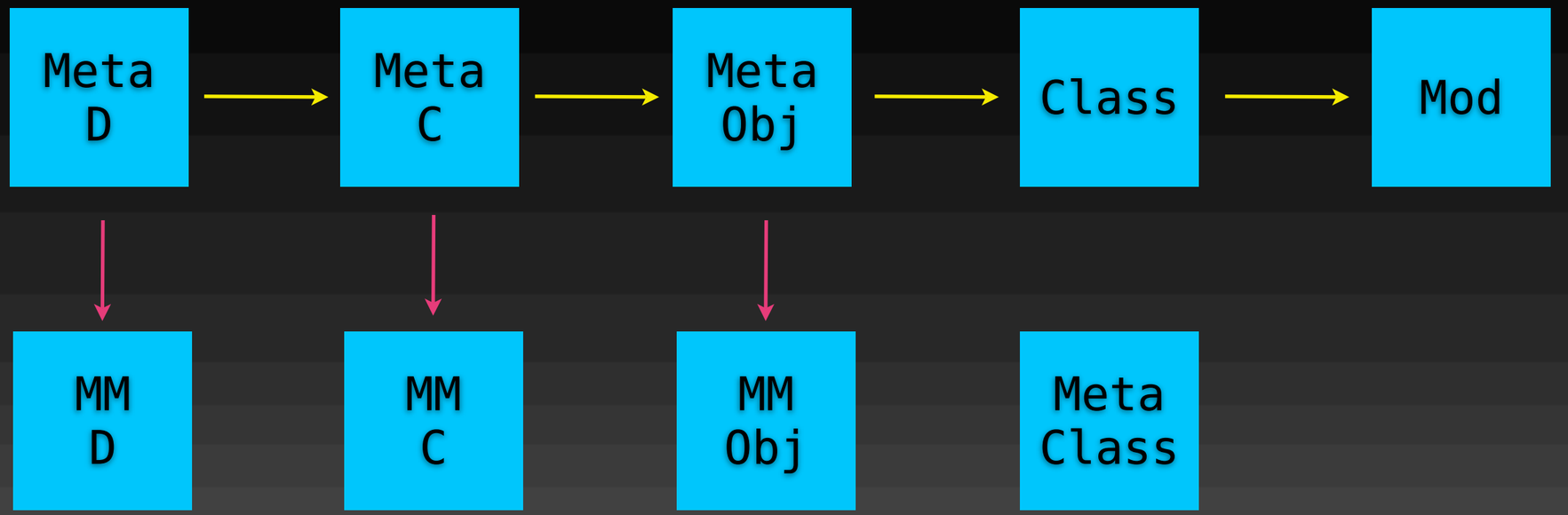
Meta
D
Meta
C
Meta
Obj
Class
Mod
MM
D
MM
C
MM
Obj
Meta
Class

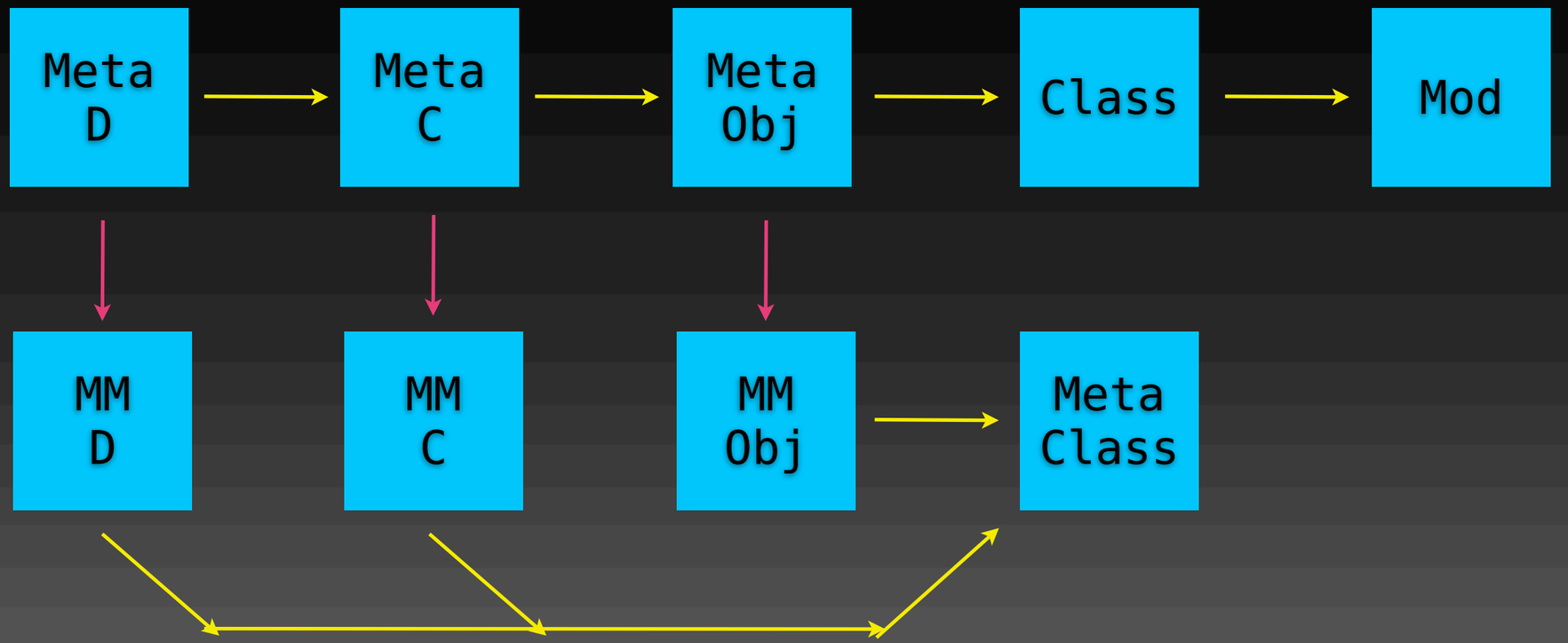
Meta
D
Meta
C
Meta
Obj
Class
Mod
MM
D
MM
C
MM
Obj
Meta
Class

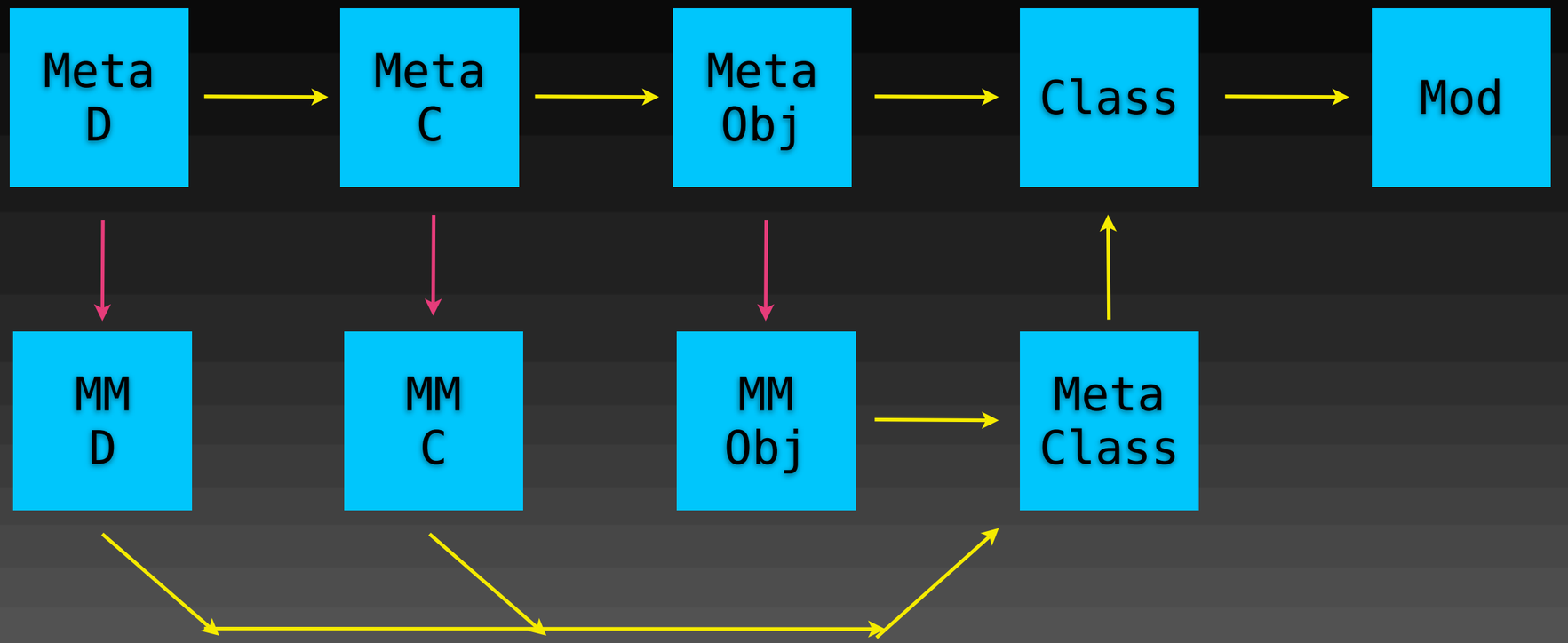
Meta
D
Meta
C
Meta
Obj
Class
Mod
MM
D
MM
C
MM
Obj
Meta
Class

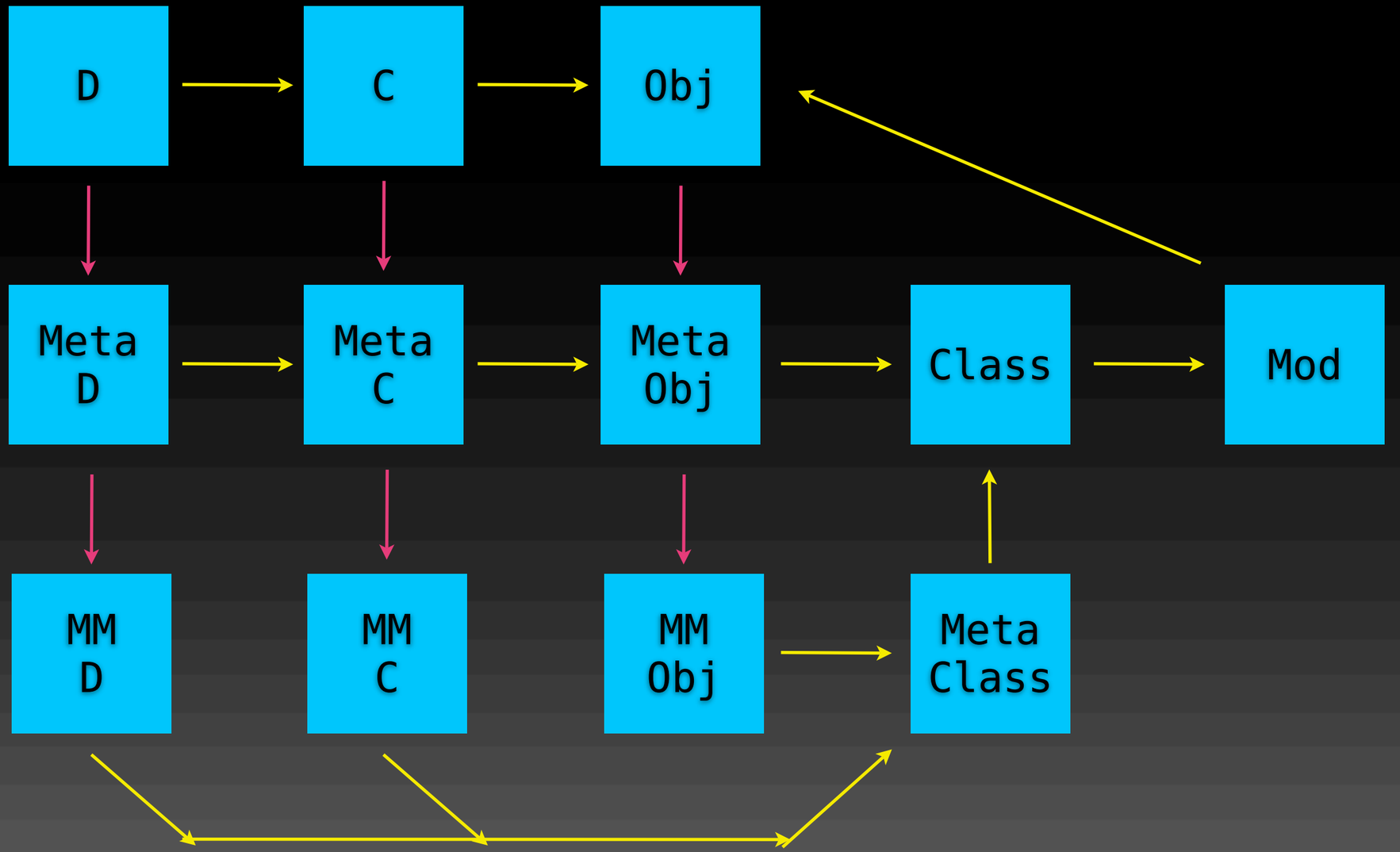
D
C
Obj
Meta D
Meta C
Meta Obj
Class
Mod
MM D
MM C
MM Obj
Meta Class

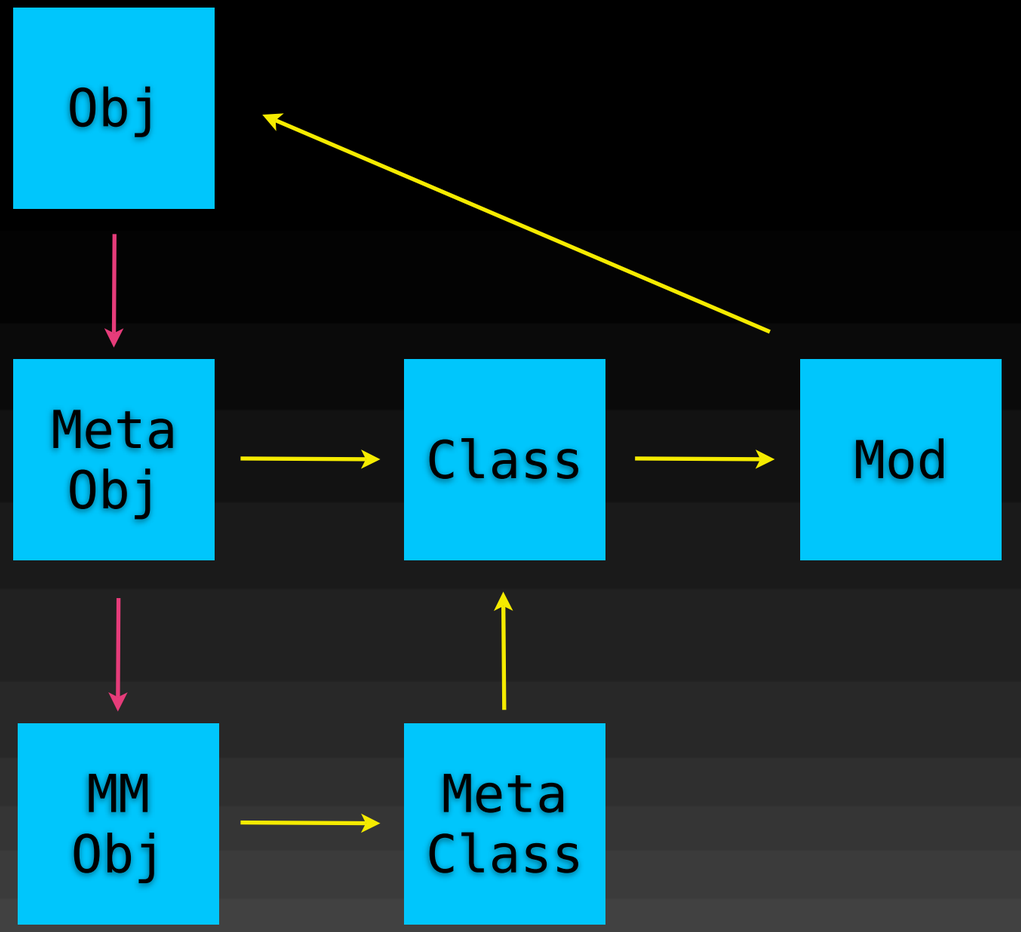
Obj
Meta
Obj
Class
Mod
MM
Obj
Meta
Class

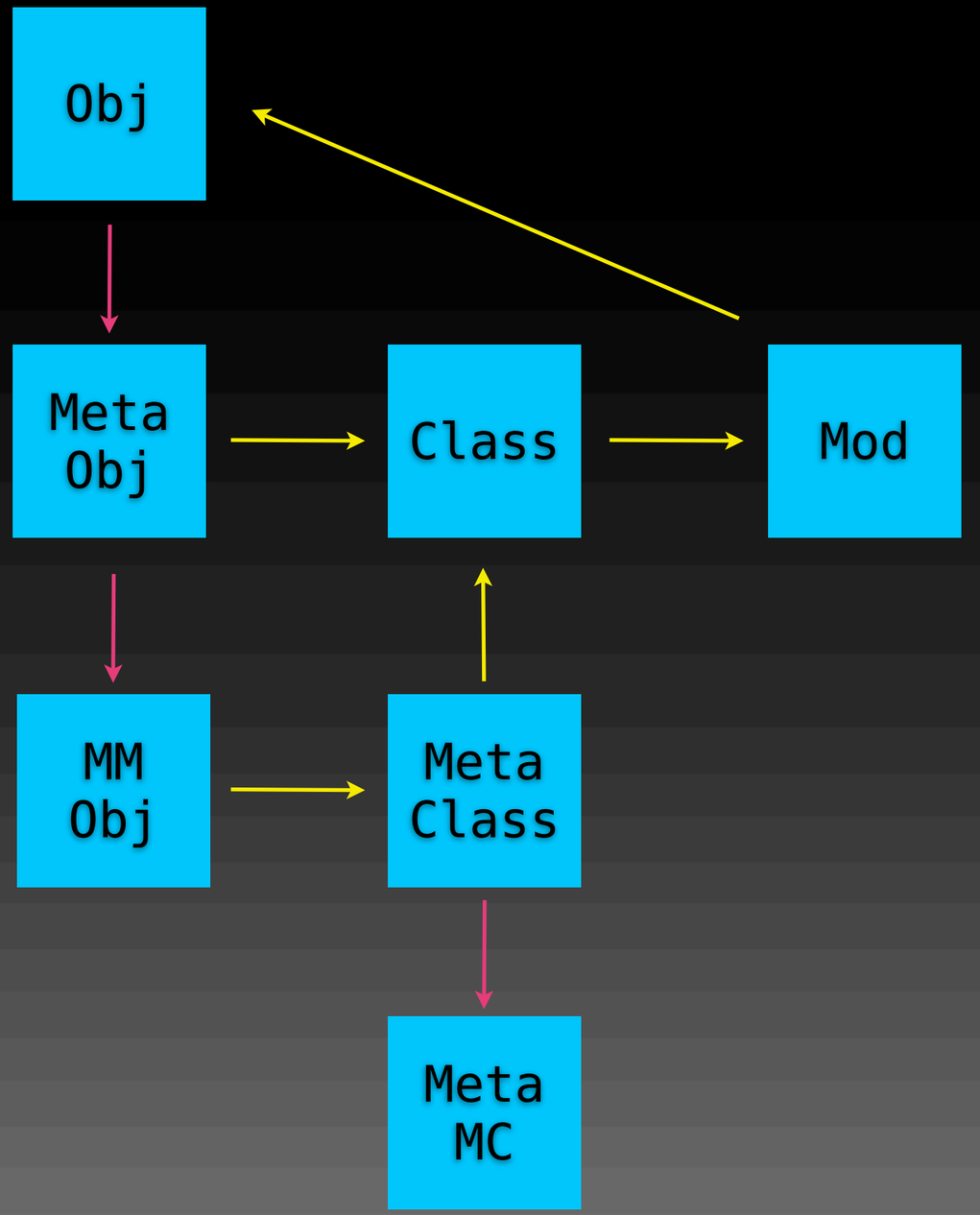
Obj
Meta
Obj
Class
Mod
MM
Obj
Meta
Class
Meta
MC

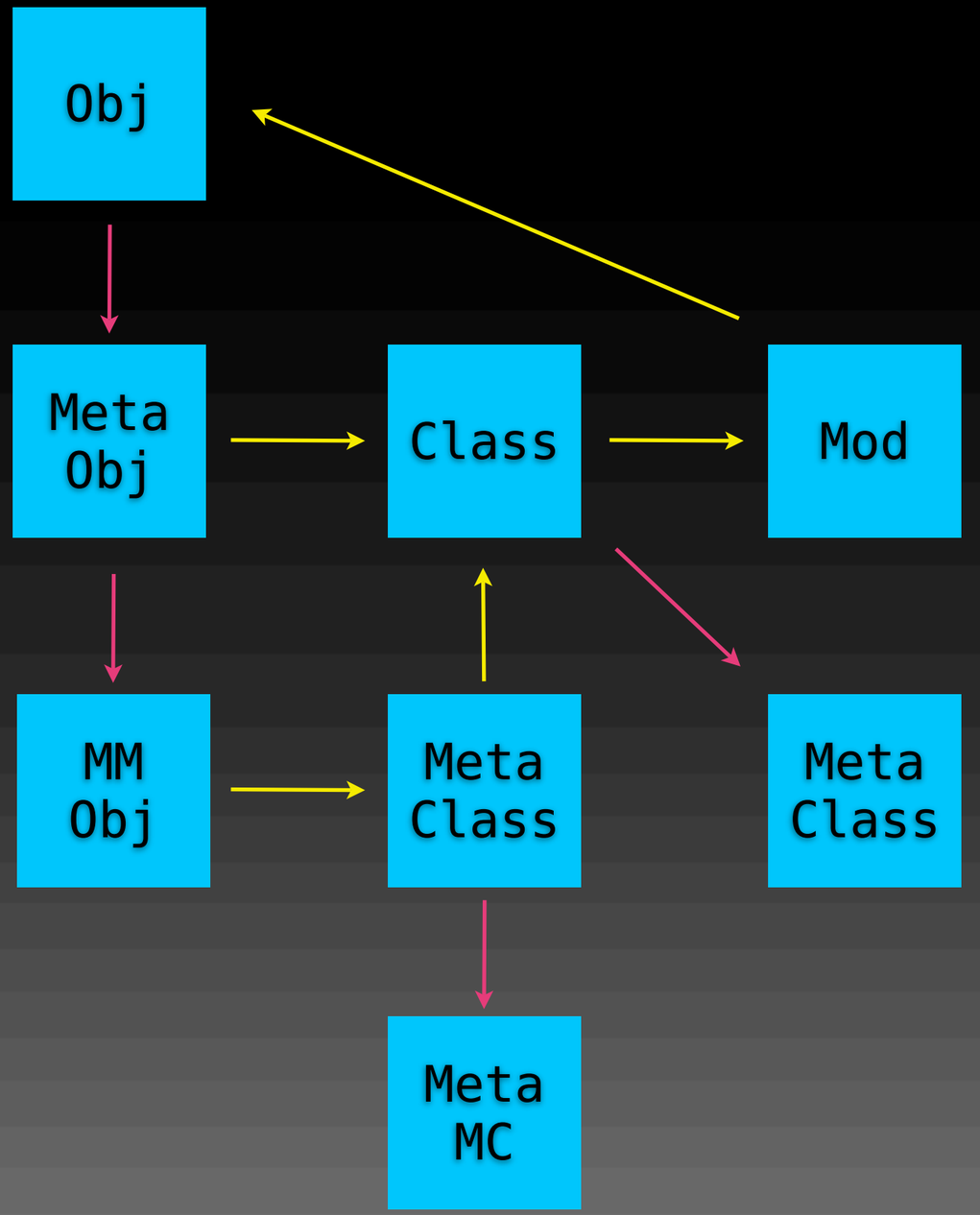
Obj
Meta Obj
Class
Mod
MM Obj
Meta Class
Meta Class
Meta MC

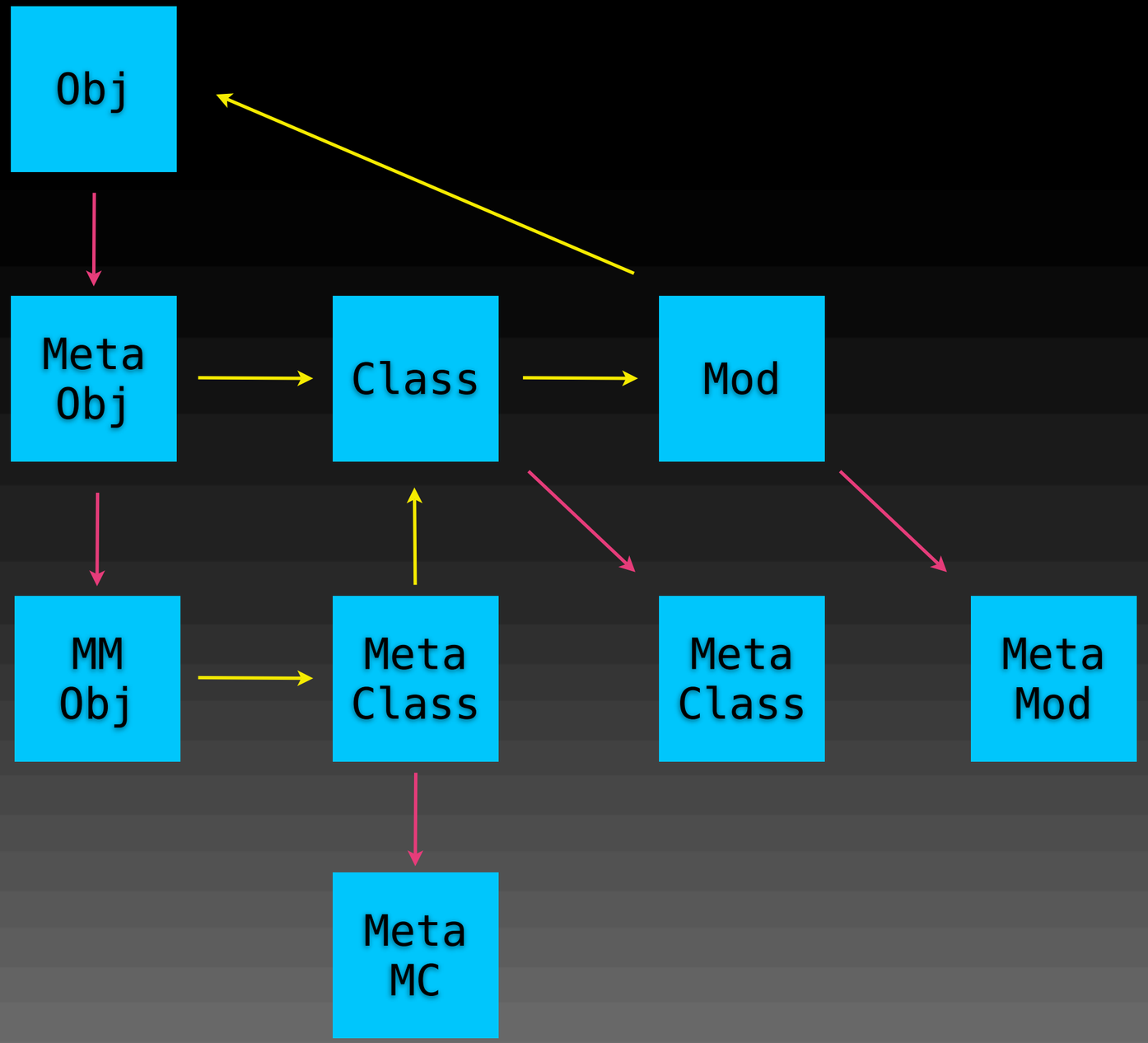
Obj
Meta Obj
Class
Mod
MM Obj
Meta Class
Meta Class
Meta Mod
Meta MC

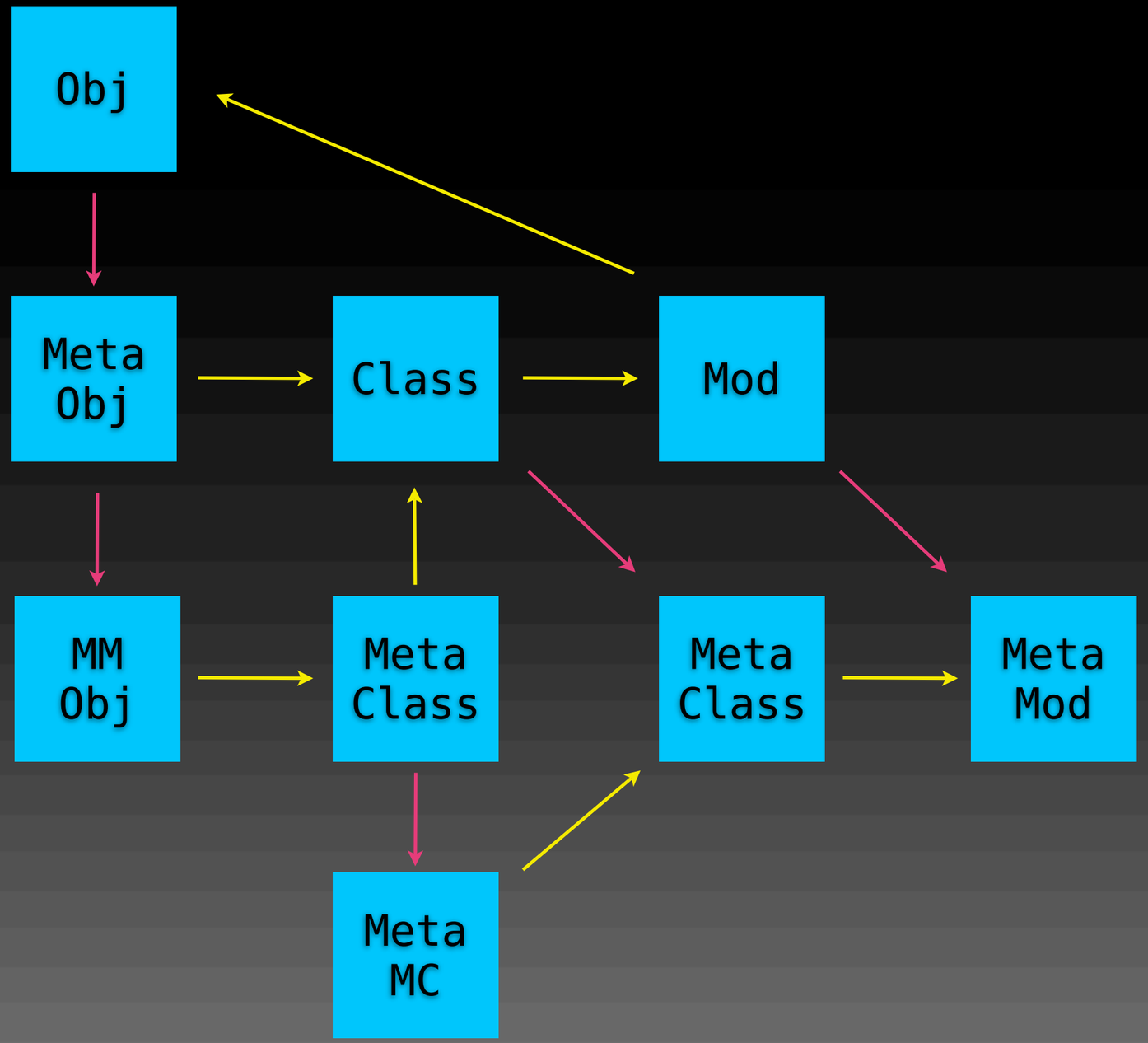
Obj
Meta Obj
Class
Mod
MM Obj
Meta Class
Meta Class
Meta Mod
Meta MC

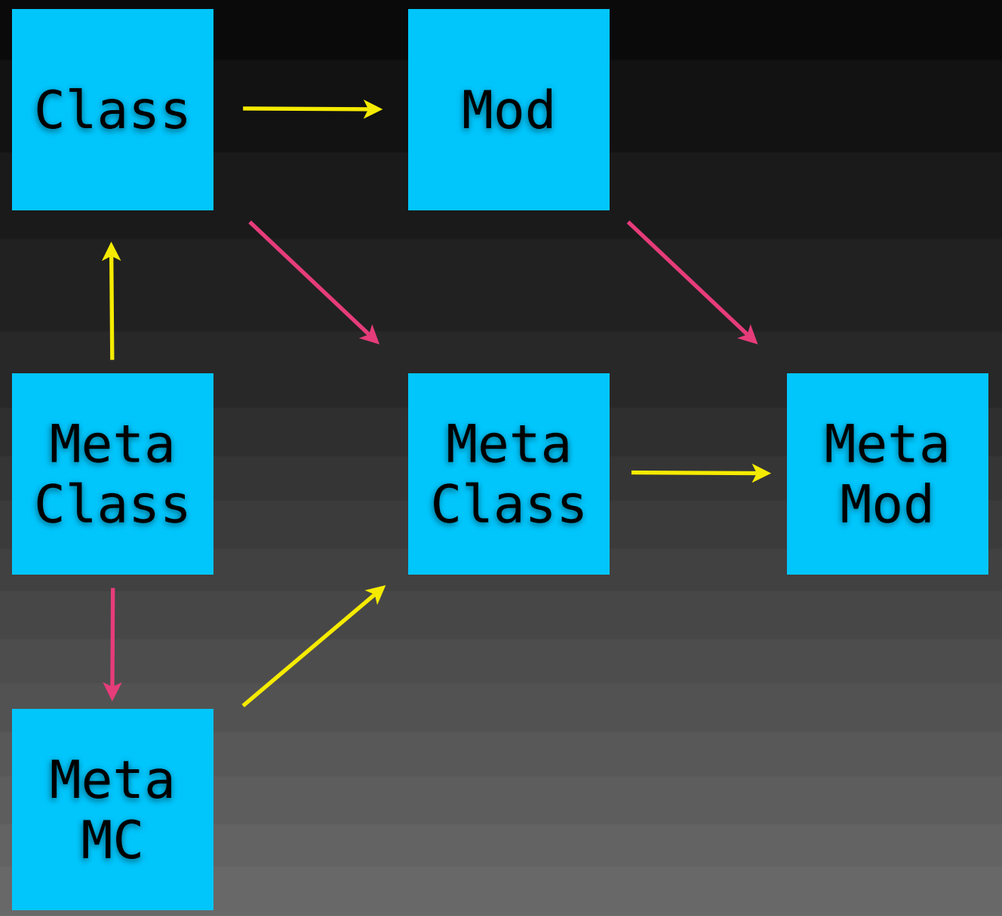
Class
Mod
Meta
Class
Meta
Class
Meta
Mod
Meta
MC

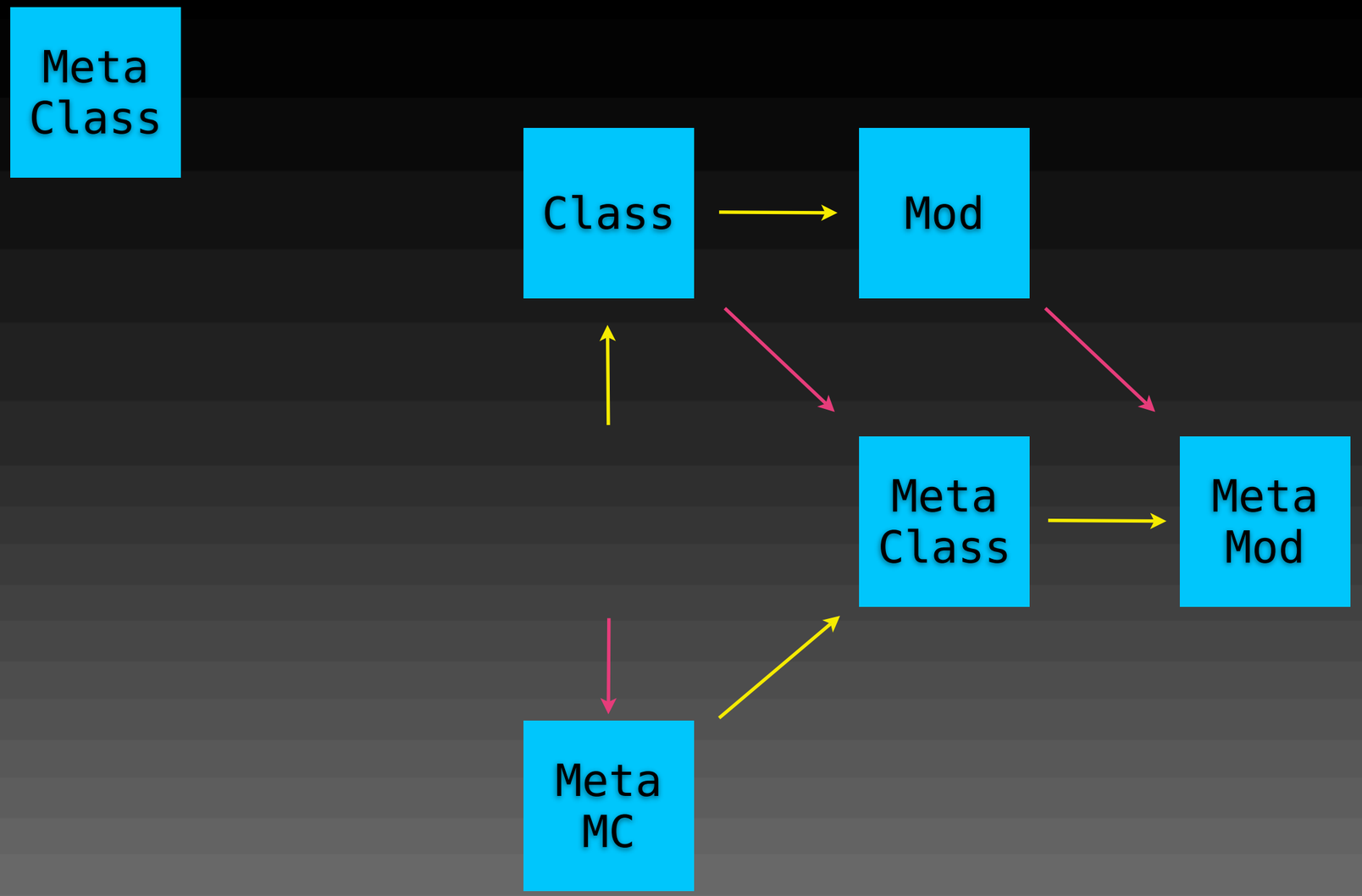
Meta
Class
Class
Mod
Meta
Class
Meta
Mod
Meta
MC

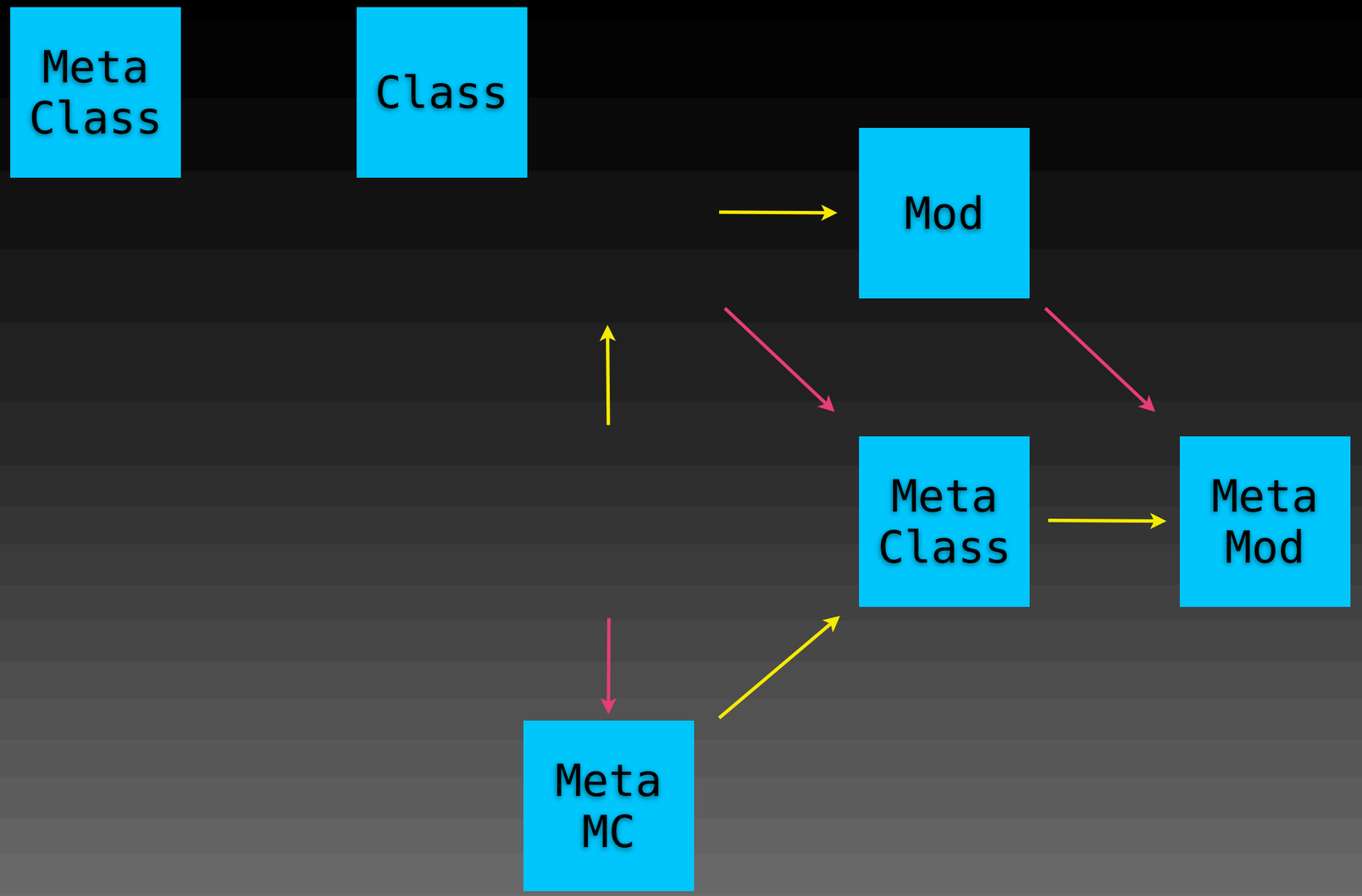
Meta
Class
Class
Mod
Meta
Class
Meta
Mod
Meta
MC

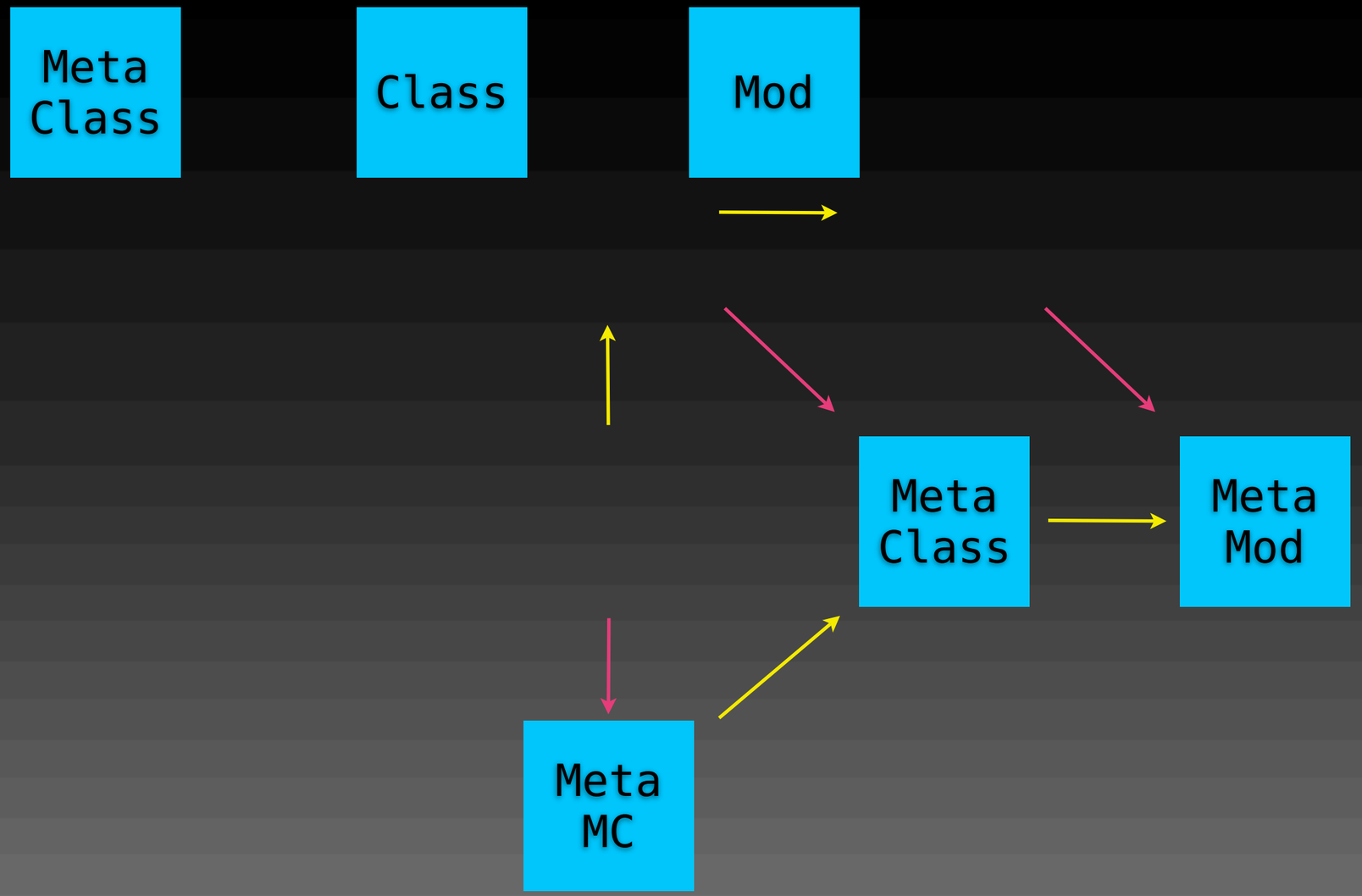
Meta
Class
Class
Mod
Meta
Class
Meta
Mod
Meta
MC

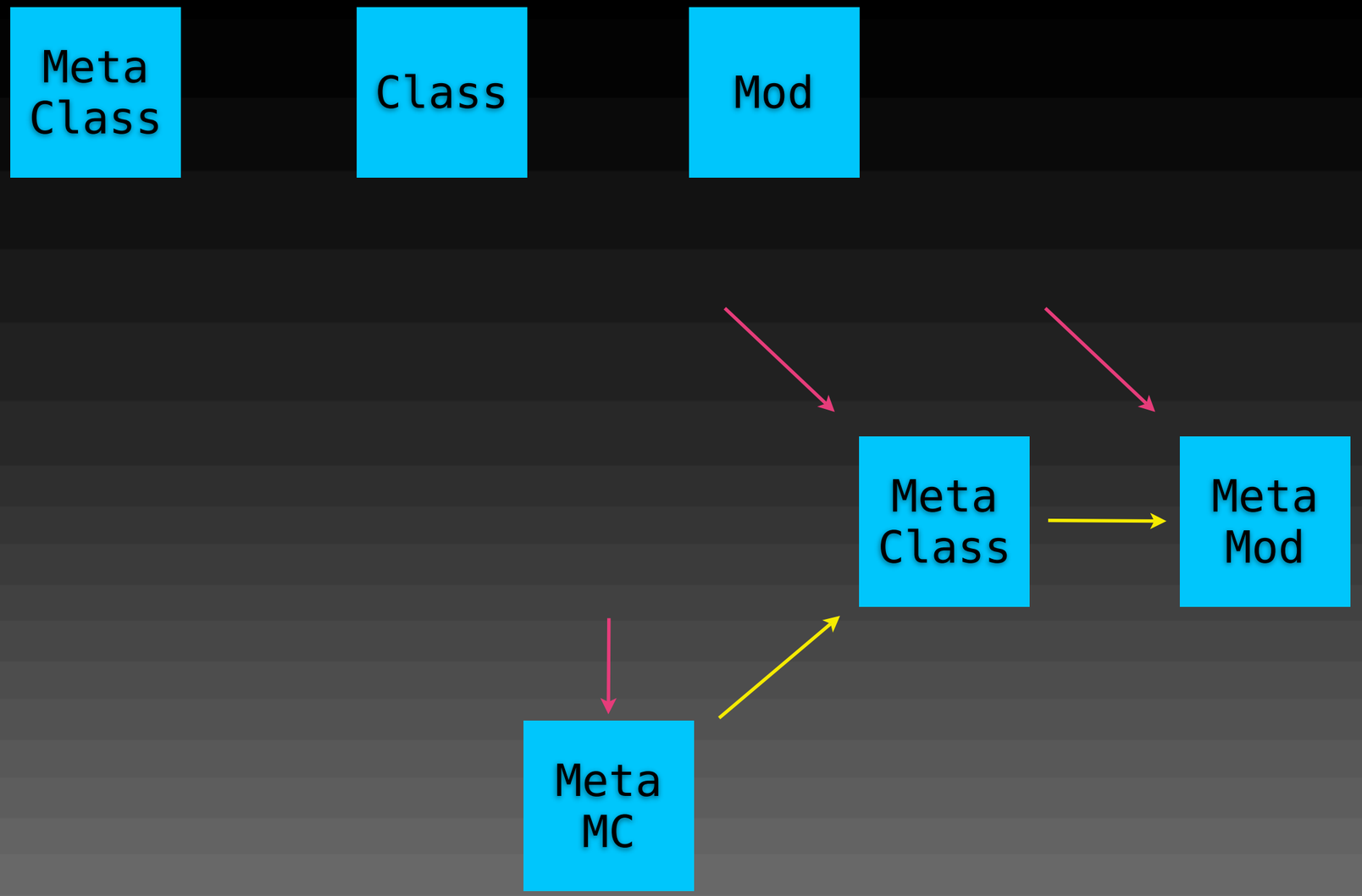
Meta
Class
Class
Mod
Meta
Class
Meta
Mod
Meta
MC

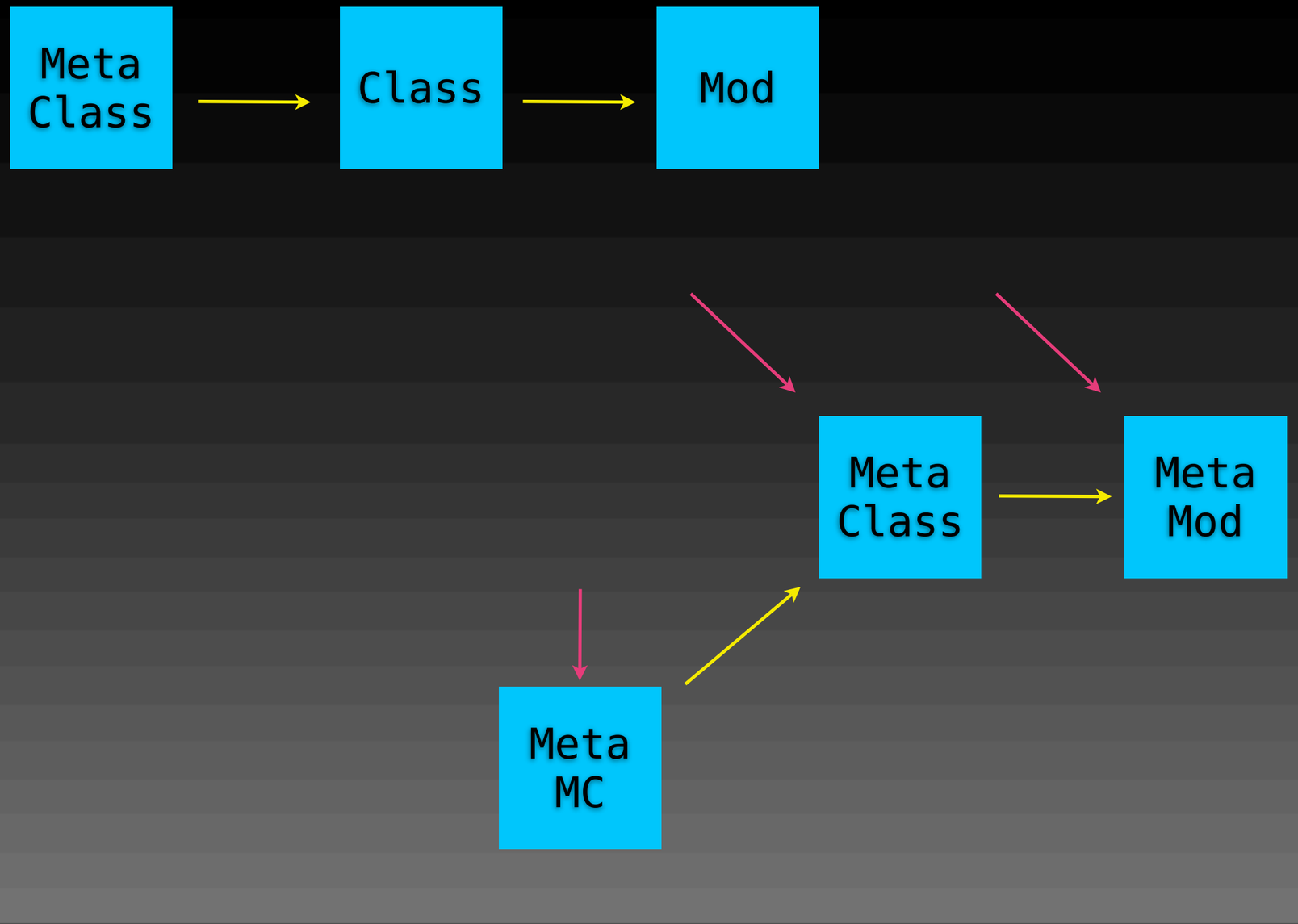
Meta
Class
Class
Mod
Meta
Class
Meta
Mod
Meta
MC

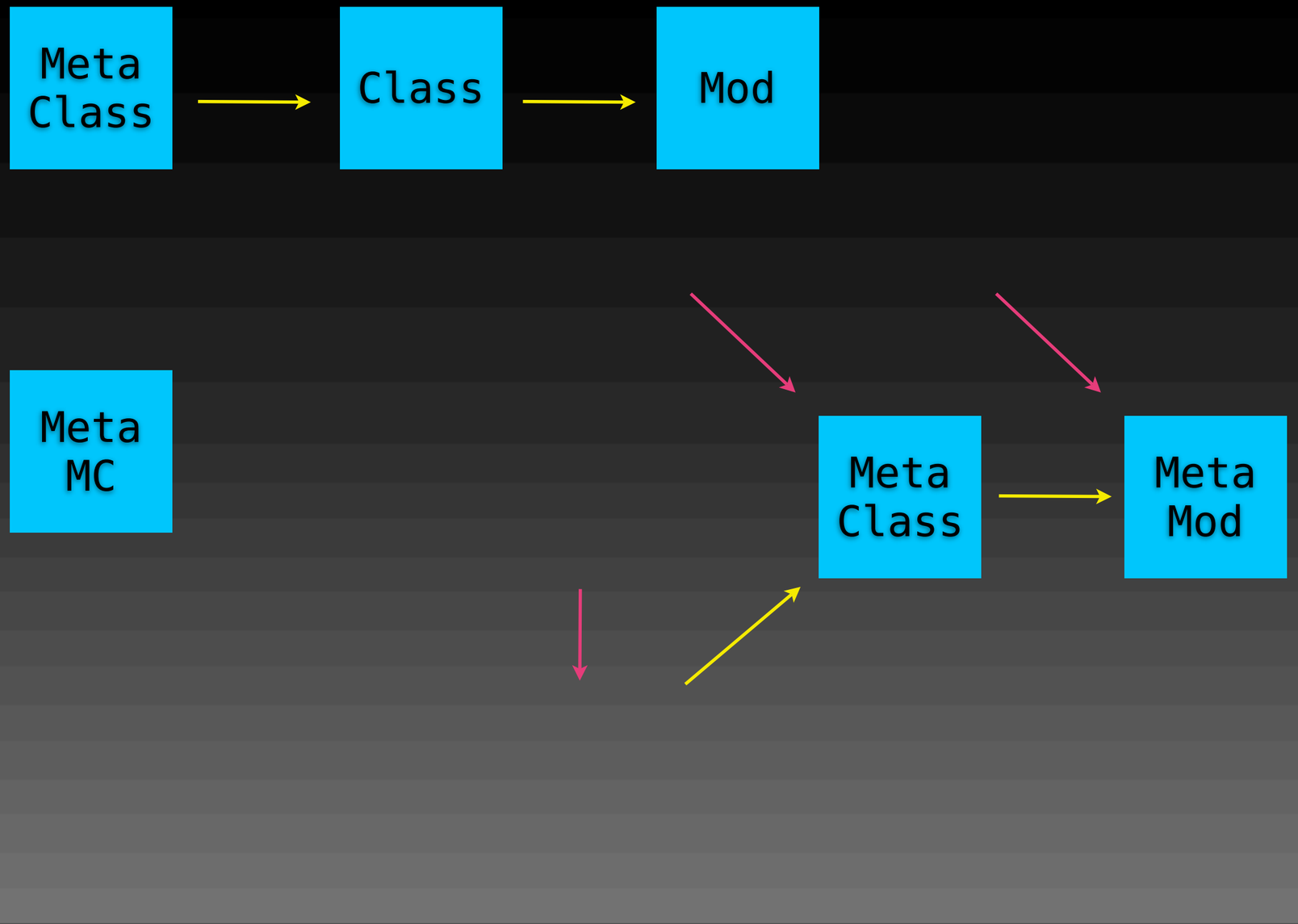
Meta
Class
Class
Mod
Meta
MC
Meta
Class
Meta
Mod

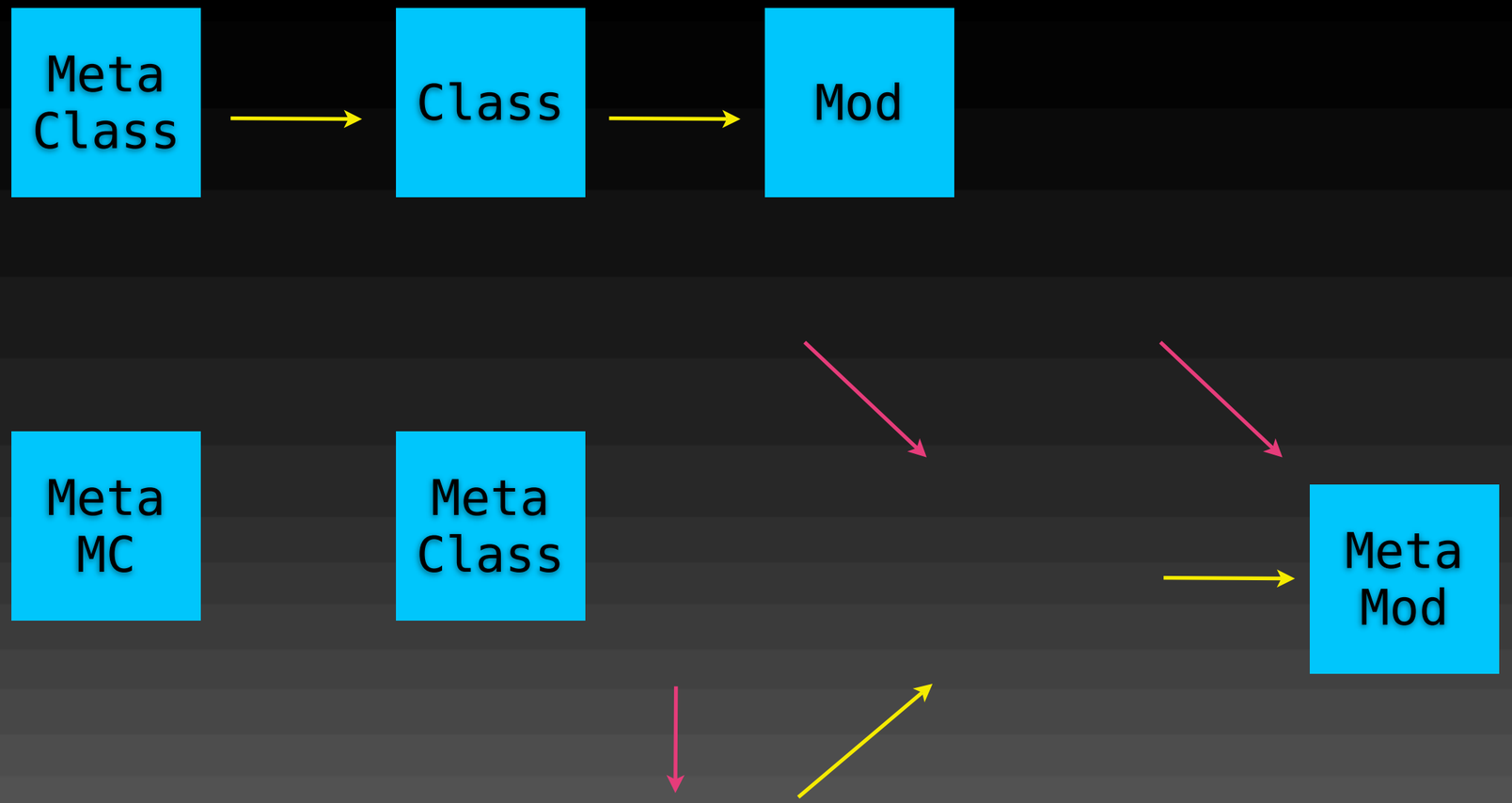
Meta
Class
Class
Mod
Meta
MC
Meta
Class
Meta
Mod

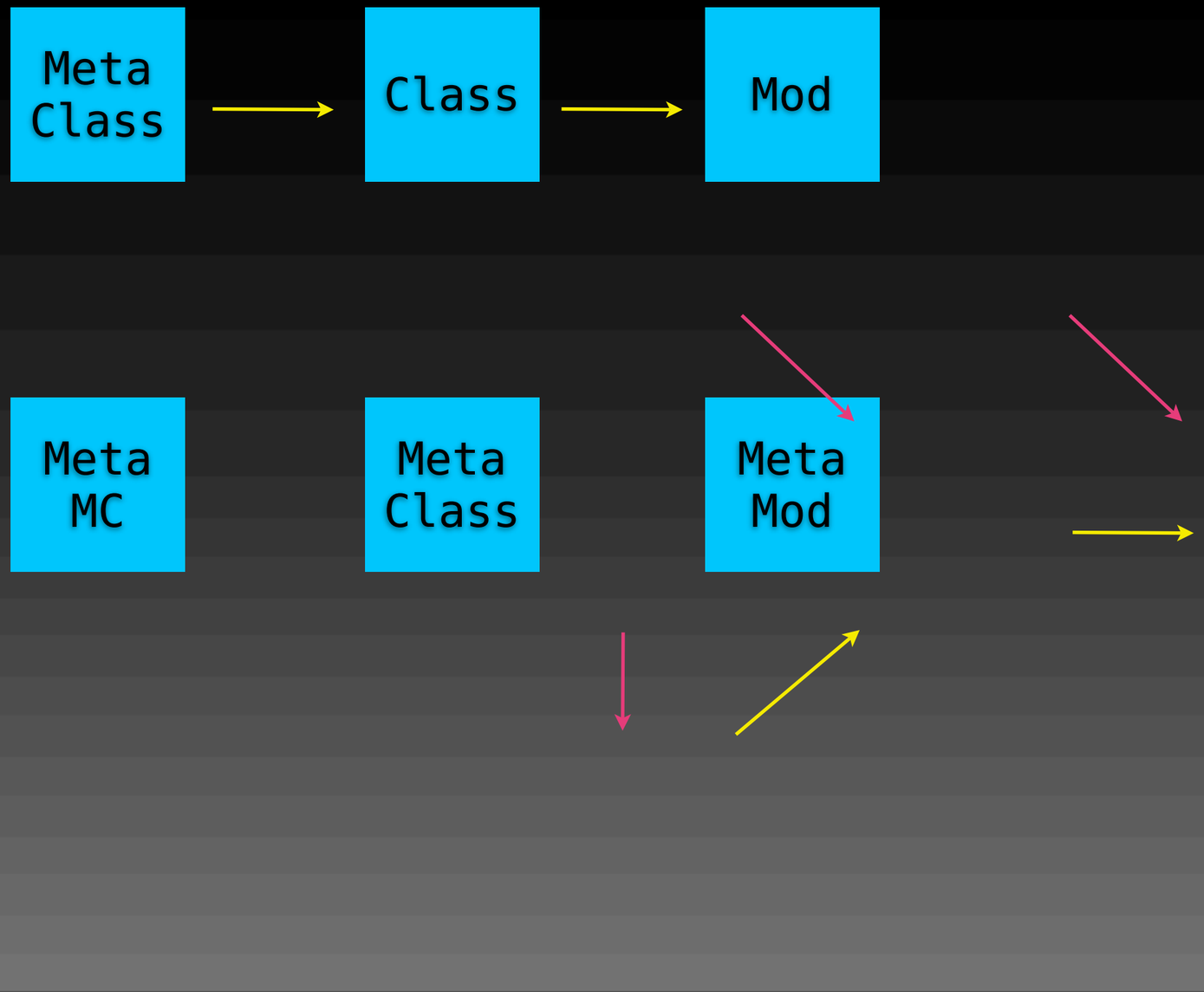
Meta
Class
Class
Mod
Meta
MC
Meta
Class
Meta
Mod

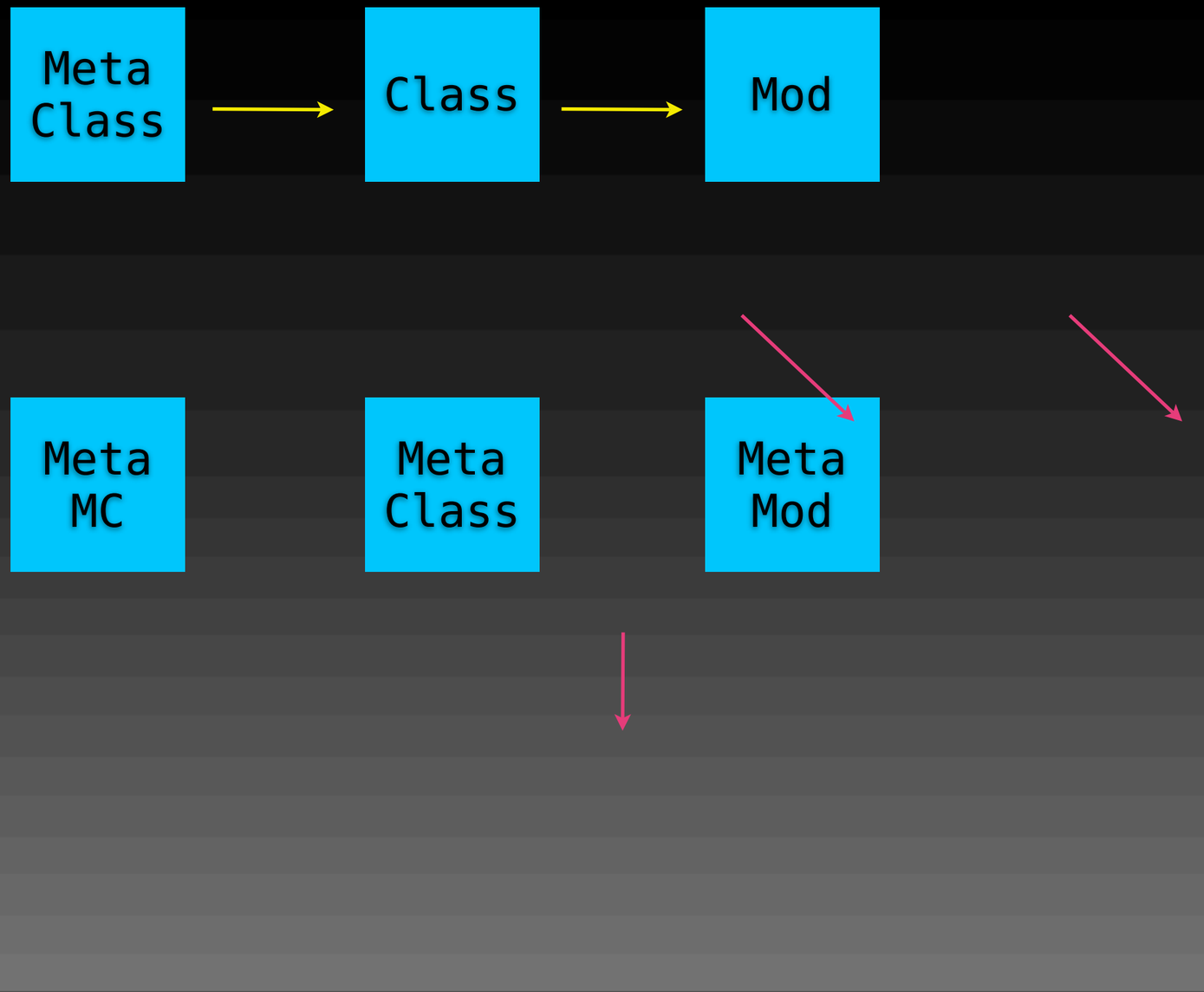
Meta
Class
Class
Mod
Meta
MC
Meta
Class
Meta
Mod

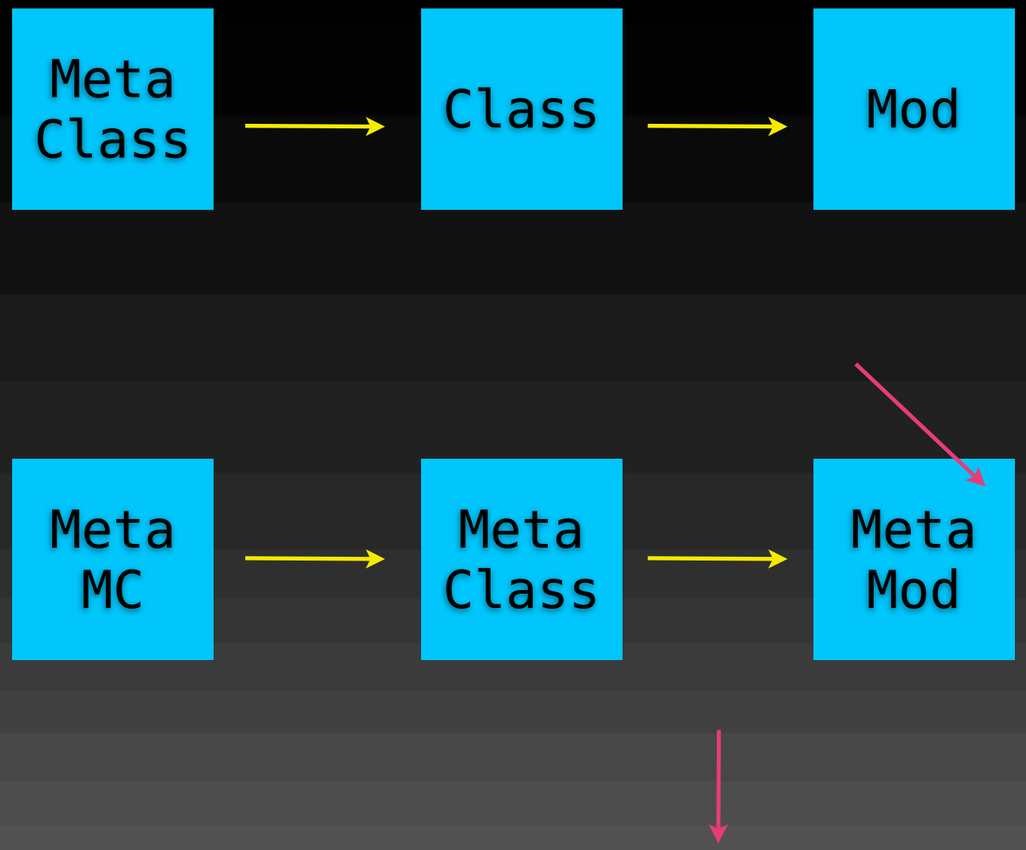
Meta
Class
Class
Mod
Meta
MC
Meta
Class
Meta
Mod

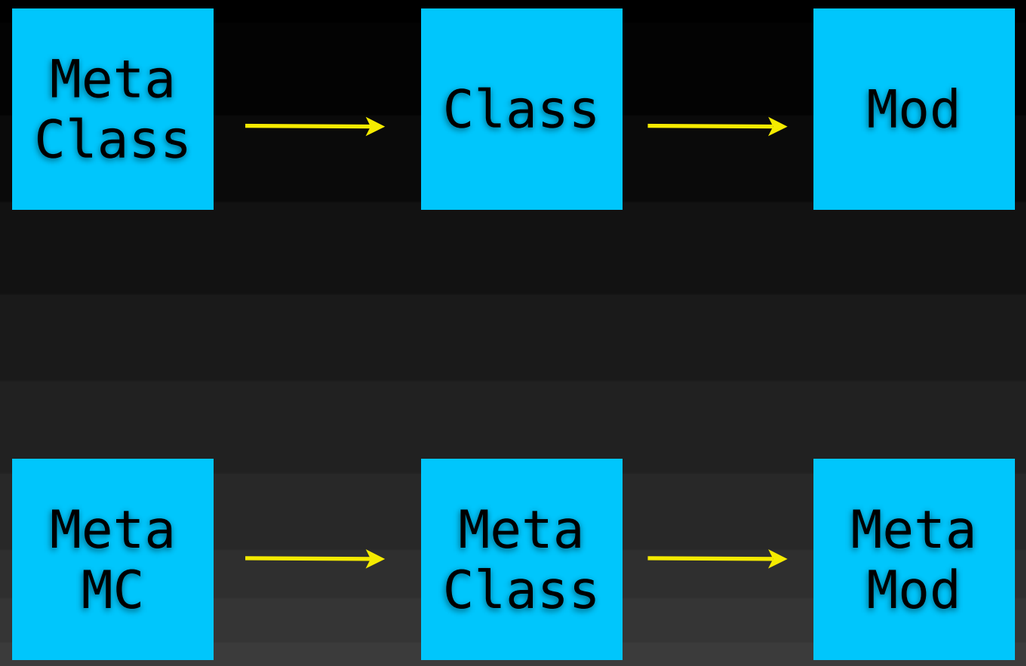
Meta
Class
Class
Mod
Meta
MC
Meta
Class
Meta
Mod

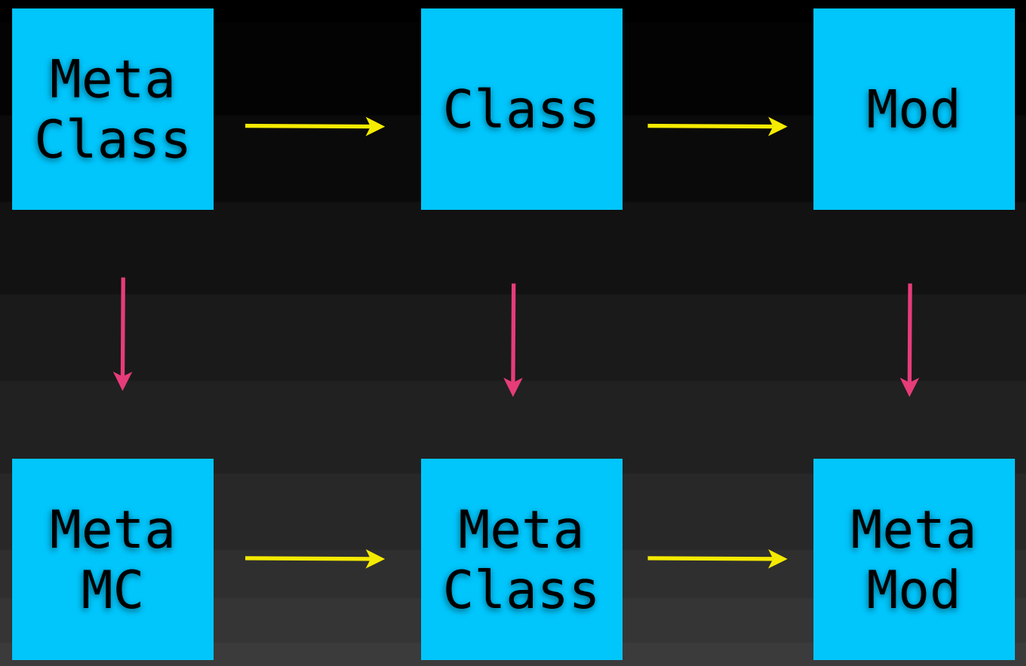
Meta
Class
Class
Mod
Meta
MC
Meta
Class
Meta
Mod

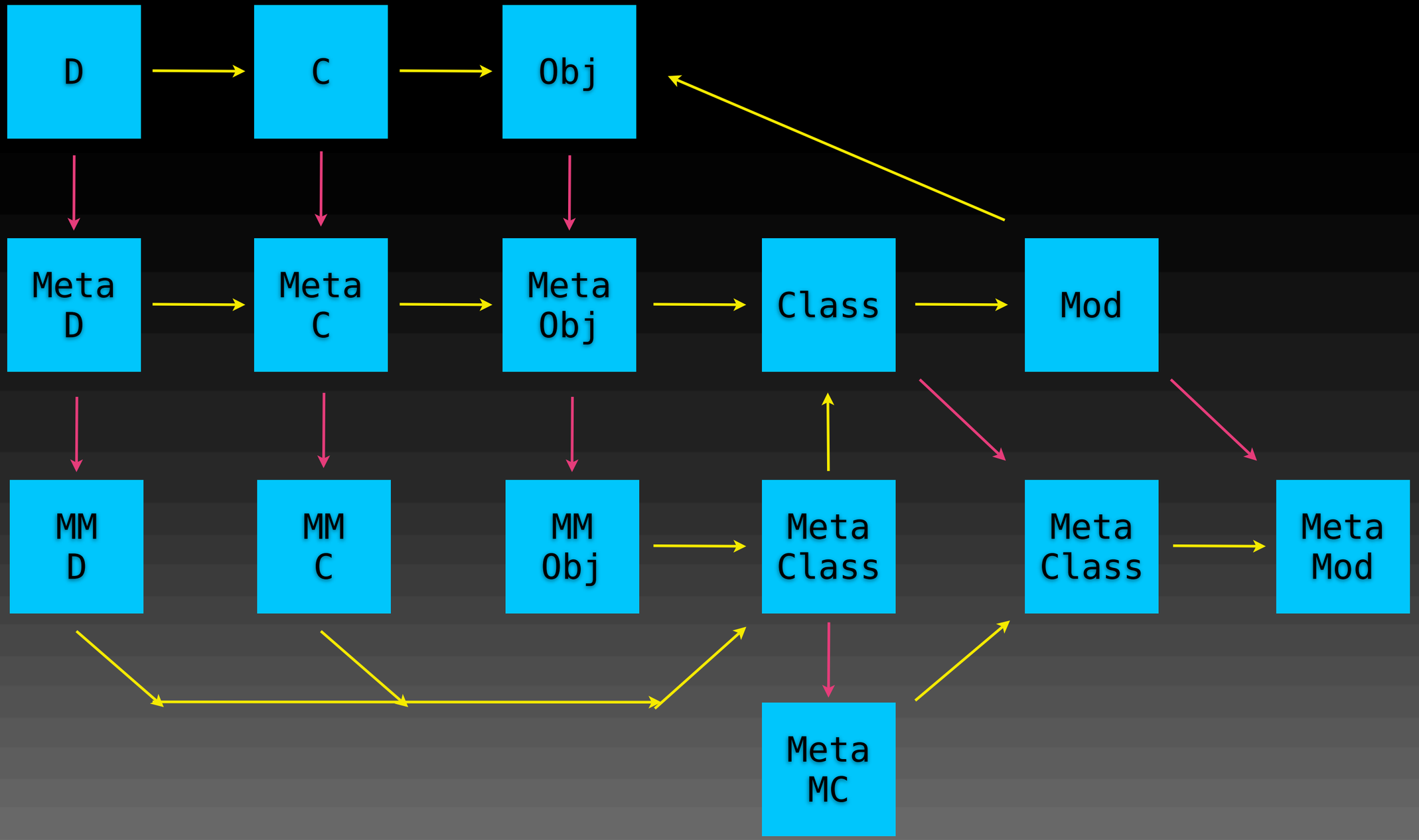
D
C
Obj
Meta D
Meta C
Meta Obj
Class
Mod
MM D
MM C
MM Obj
Meta Class
Meta Class
Meta Mod
Meta MC

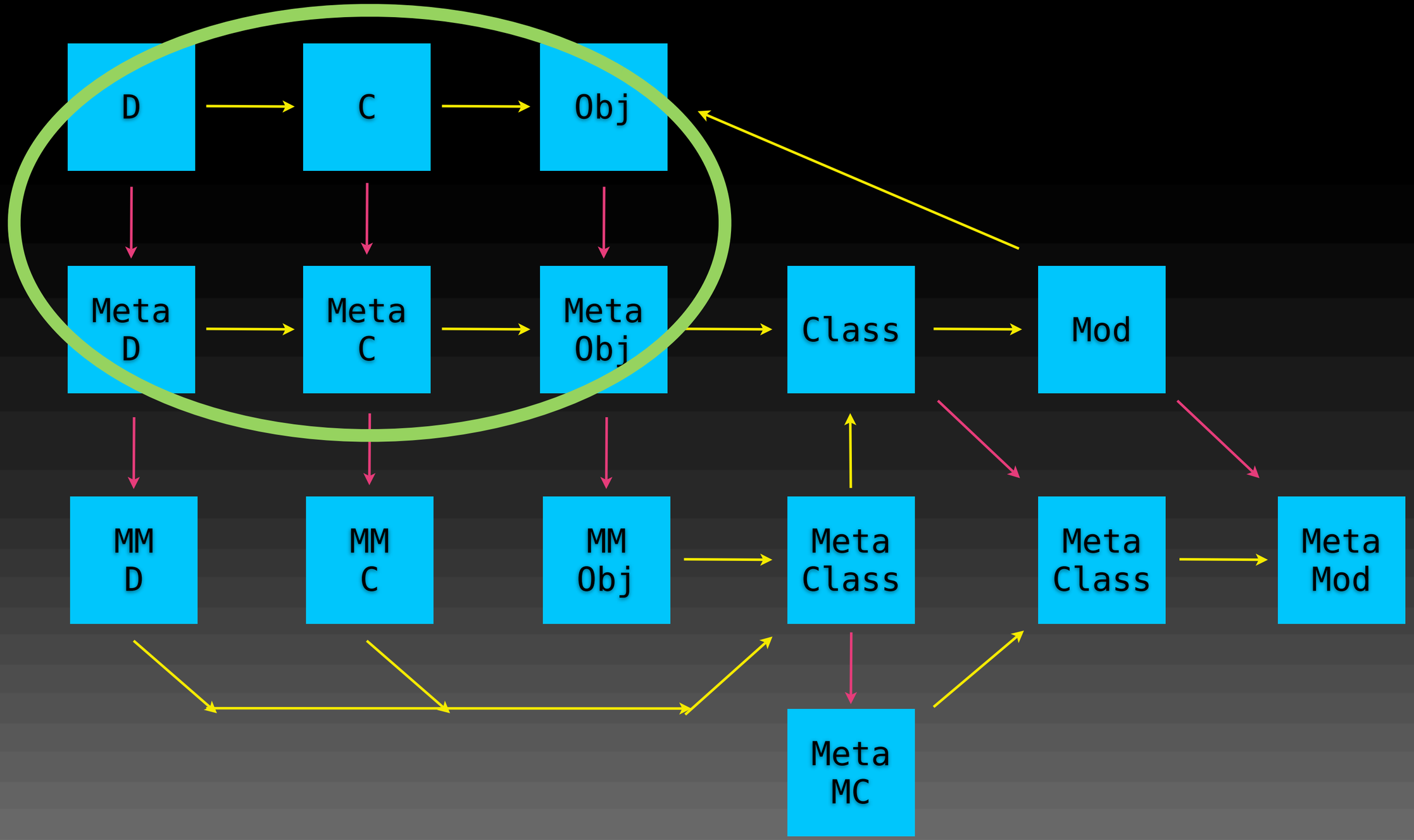
D
C
Obj
Meta D
Meta C
Meta Obj
Class
Mod
MM D
MM C
MM Obj
Meta Class
Meta Class
Meta Mod
Meta MC

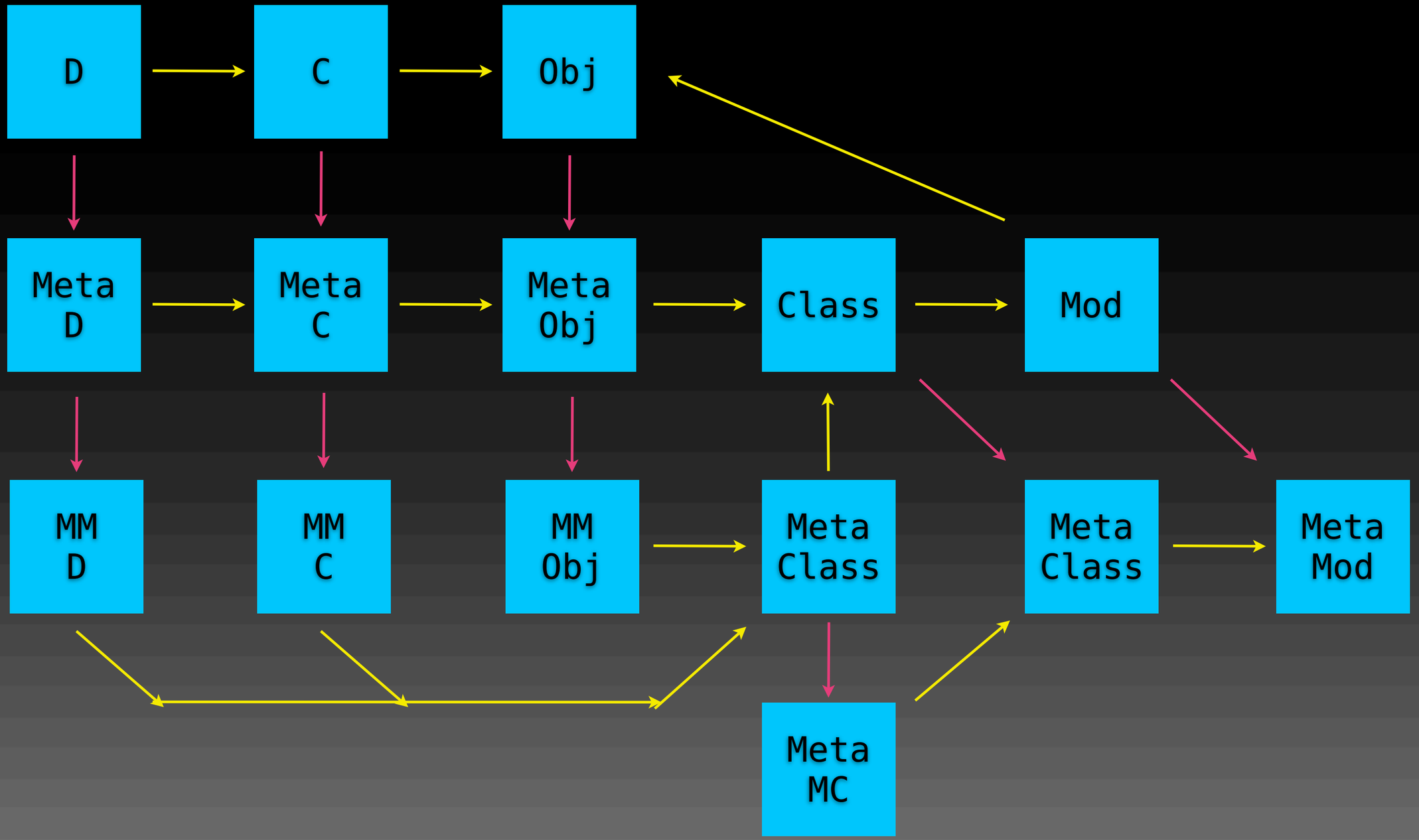
D
C
Obj
Meta D
Meta C
Meta Obj
Class
Mod
MM D
MM C
MM Obj
Meta Class
Meta Class
Meta Mod
Meta MC

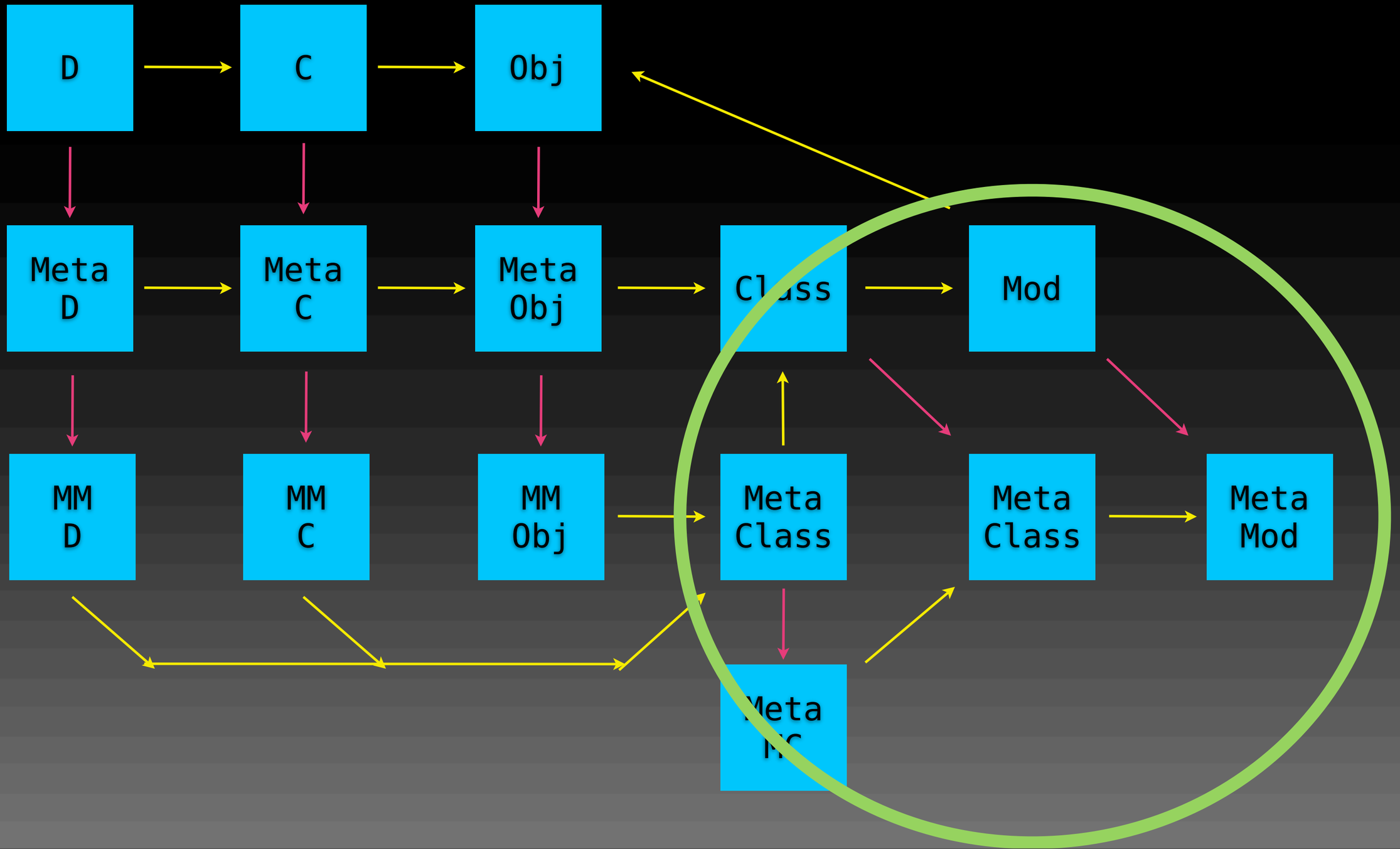
D
C
Obj
Meta D
Meta C
Meta Obj
Class
Mod
MM D
MM C
MM Obj
Meta Class
Meta Class
Meta Mod
Meta M

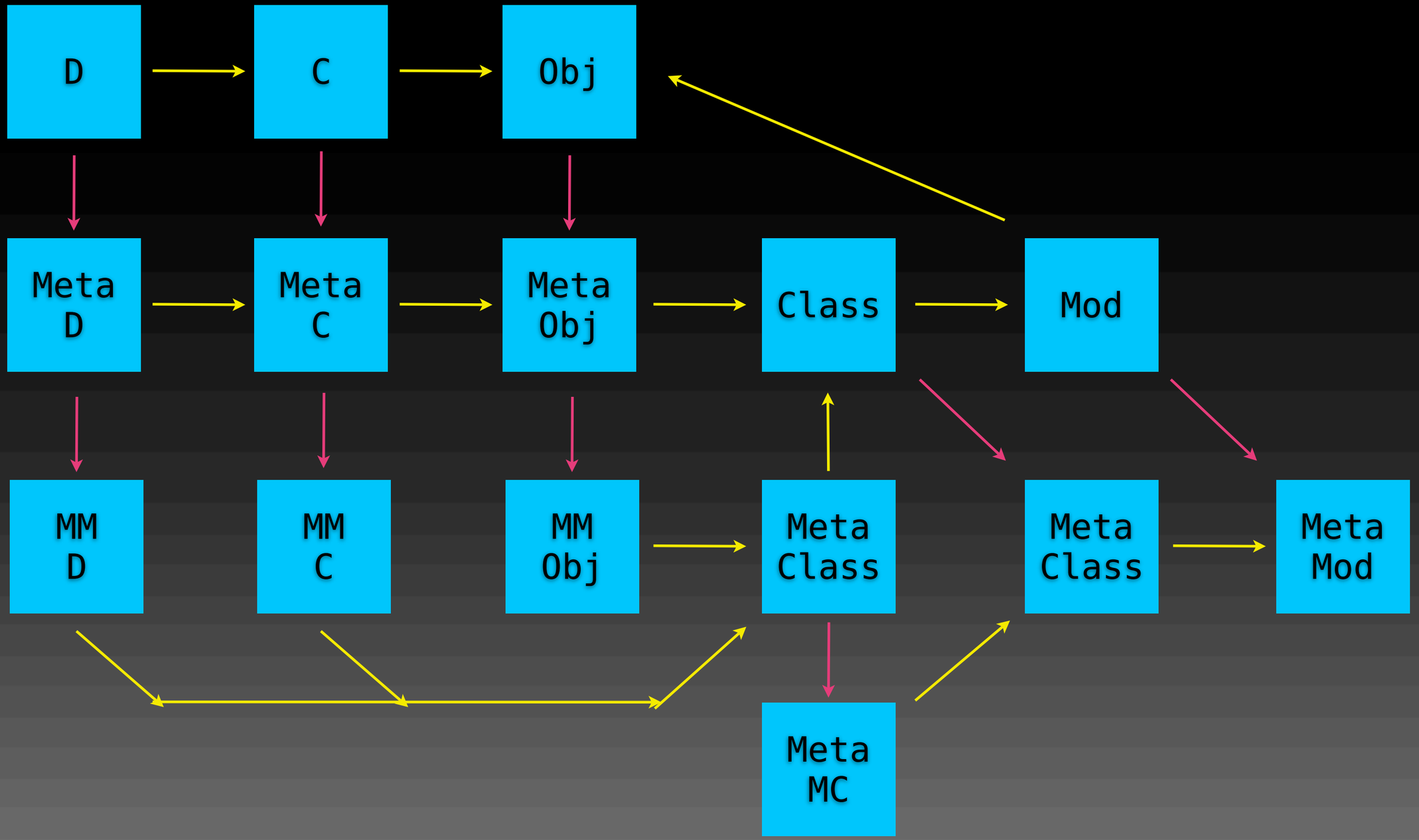
D
C
Obj
Meta D
Meta C
Meta Obj
Class
Mod
MM D
MM C
MM Obj
Meta Class
Meta Class
Meta Mod
Meta MC

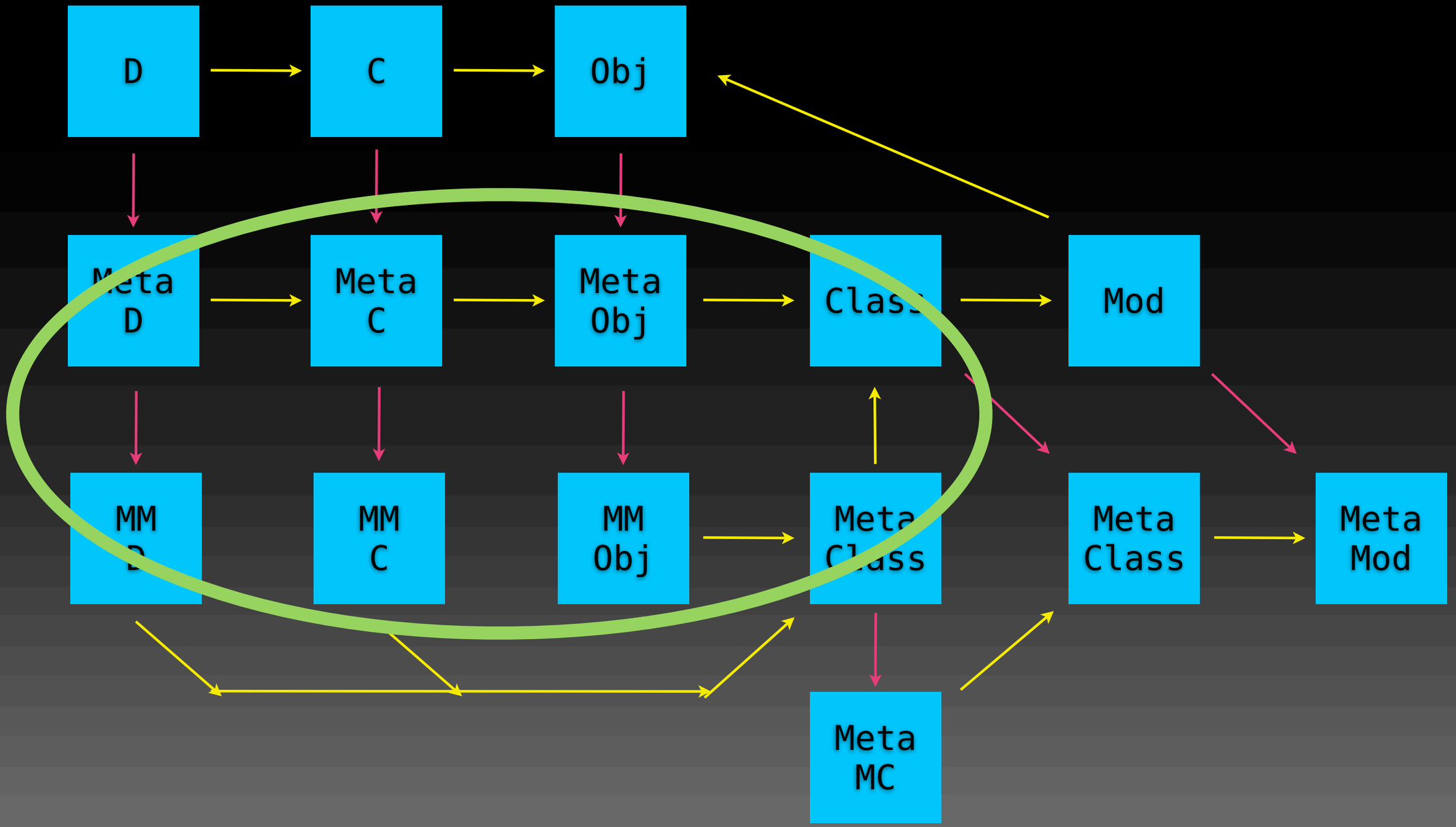
D
C
Obj
Meta D
Meta C
Meta Obj
Class
Mod
MM D
MM C
MM Obj
Meta Class
Meta Class
Meta Mod
Meta MC

Visual Paradigm for UML Community Edition [not for commercial use]

Ruby Object Model (Labyrinth?)

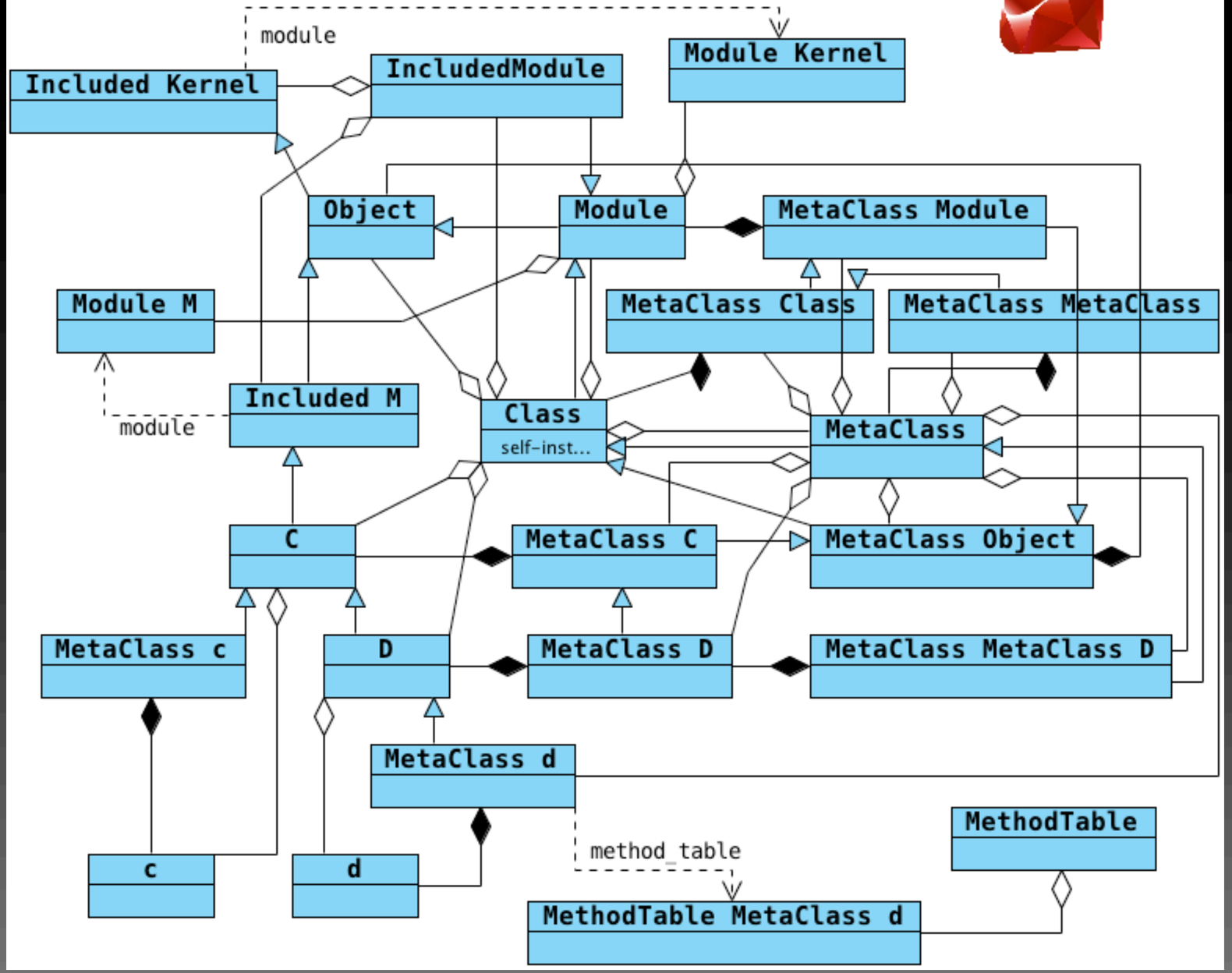

- BlockEnvironment
- InstructionSequence
- Compiler
- Breakpoint
- Rubinius::Task
- Channel
- Actor
- Rubinius::VM

Reference: Rubinius

- http://rubini.us/
- http://github.com/evanphx/rubinius/
- http://rubinius.lighthouseapp.com/
- http://groups.google.com/group/rubinius-dev/

Reference: Articles

- http://blog.fallingsnow.net/category/rubinius/
- http://betterruby.wordpress.com/
- http://www.infoq.com/news/2007/07/rubinius-interview-part-one
- http://blog.nicksieger.com/articles/2006/10/20/rubyconf-sydney-and-rubinius
- http://www.klankboomklang.com/2007/10/05/the-metaclass/
- http://www.hawthorne-press.com/WebPage_RHG.html

Reference: Others

- http://rubyspec.org/
- http://llvm.org/
- http://users.ipa.net/~dwighth/squeak/oopsla_squeak.html

Reference: Wikipedia

- http://en.wikipedia.org/wiki/Rubinius
- http://en.wikipedia.org/wiki/Squeak
- http://en.wikipedia.org/wiki/Smalltalk
- http://en.wikipedia.org/wiki/Simula
- http://en.wikipedia.org/wiki/Model-view-controller
- http://en.wikipedia.org/wiki/Alan_Kay
- http://en.wikipedia.org/wiki/PARC_(company)
- http://en.wikipedia.org/wiki/Bootstrapping_(compilers)
- http://en.wikipedia.org/wiki/Self-hosting
- http://en.wikipedia.org/wiki/PyPy

```
git clone \
git://github.com/evanphx/rubinius.git

cd rubinius; rake build
```

?