Computer Organization and Architecture

- Mohit Singh

SLIDES FROM LECTURE TAKEN with FAQs

RISC

- Stands for **Reduced Instruction Set Computing**
- Uniform instruction format, using a single word with the opcode in the same bit positions in every instruction, demanding less decoding;
- Identical general purpose registers, allowing any register to be used in any context, simplifying compiler design (although normally there are separate floating point registers);
- Simple addressing modes.
- Few data types in hardware,.

CISC

- Stands for **Complex Instruction Set Computing**

DMA

- Direct memory access (DMA) is a process in which an external device takes over the control of system bus from the CPU.
- DMA is for high-speed data transfer from/to mass storage peripherals, e.g. harddisk drive, magnetic tape, CD-ROM, and sometimes video controllers.
- For example, a hard disk may boasts a transfer rate of 5 M bytes per second, i.e. 1 byte transmission every 200 ns. To make such data transfer via the CPU is both undesirable and unnecessary.
- The basic idea of DMA is to transfer blocks of data directly between memory and peripherals. The data don't go through the microprocessor but the data bus is occupied.
- "Normal" transfer of one data byte takes up to 29 clock cycles. The DMA transfer requires only 5 clock cycles.
- Nowadays, DMA can transfer data as fast as 60 M byte per second. The transfer rate is limited by the speed of memory and peripheral devices.

PIPELINING

- Pipelining is used to enhance performance by overlapping the execution of instructions.
- In terms of a CPU, the implementation of pipelining has the effect of reducing the average instruction time, therefore reducing the average CPI.
- E.g. :If each instruction in a microprocessor takes 5 clock cycles (unpipelined) &we have a 4 stage pipeline, the ideal average CPI with the pipeline will be 1.25 .
- http://www.engr.mun.ca/~venky/Pipelining.ppt

Use and meaning of virtual memory.

- Abstract implementation to give impression that it has working memory is contiguous, while in fact it is physically fragmented, and may even overflow onto disk storage
- Like a RAM of 512mb working as 1GB
- Program in operation generates addresses as per the size of virtual memory and not of the RAM
- To perform address translations we have a TLB {Translation Lookaside Buffer}.TLB contains a limited number of mappings between virtual and physical addresses.
- When the translation for the requested address is not resident in the TLB, the hardware will have to perform the translation and load the result into the TLB.

Benefits

- There are two fold benefits:
  1)A memory location can be addressed that does not currently reside. Therefore it ensures contiguous address generation.
  2) Since RAM is faster than the Hard Drive therefore speed increases.
- A key concept is the manner of mapping done.

What is the significance of CACHE MEMORY?

- CPU processing speed is very fast. Whereas the data is stored at locations where the access speed is lower.
- Therefore we adopt a hierarchical storage mechanism where a lower level (close to processor) is costly has faster access speed and lower memory size.
- Data used frequently is cached in these memory locations.
- The data required is first checked by the CPU in the cache
  - Hit: If present, the CPU uses the data and performs the task.
  - Miss: If not found, the data is loaded from the main memory using specific algorithm and replacement policies.

An example

- You want to open a song which happens to be F:/MUSIC/AUDIO/HIMESH/*.rm..
- you would to have to go through f:/music/audio… therefore as we are clicking on the icons the addresses inside the icons are also loaded onto the cache.
- This makes the next click faster.

Computer Organization and Architecture

- Mohit Singh

Architecture & Organization

- Architecture is those attributes visible to the programmer
  - Instruction set, number of bits used for data representation, I/O mechanisms, addressing techniques.
  - e.g. Is there a multiply instruction?
- Organization is how features are implemented
  - Control signals, interfaces, memory technology.
  - e.g. Is there a hardware multiply unit or is it done by repeated addition?

INTERRUPTS & BUSES

Interrupts

- Mechanism by which other modules (e.g. I/O) may interrupt normal sequence of processing
- Program
  - e.g. overflow, division by zero
- Timer
  - Generated by internal processor timer
  - Used in pre-emptive multi-tasking
- I/O
  - from I/O controller
- Hardware failure
  - e.g. memory parity error

Interrupt Cycle

- Added to instruction cycle
- Processor checks for interrupt
  - Indicated by an interrupt signal
- If no interrupt, fetch next instruction
- If interrupt pending:
  - Suspend execution of current program
  - Save context
  - Set PC to start address of interrupt handler routine
  - Process interrupt
  - Restore context and continue interrupted program

Multiple Interrupts

- Disable interrupts
  - Processor will ignore further interrupts whilst processing one interrupt
  - Interrupts remain pending and are checked after first interrupt has been processed
  - Interrupts handled in sequence as they occur
- Define priorities
  - Low priority interrupts can be interrupted by higher priority interrupts
  - When higher priority interrupt has been processed, processor returns to previous interrupt

Multiple Interrupts - Sequential

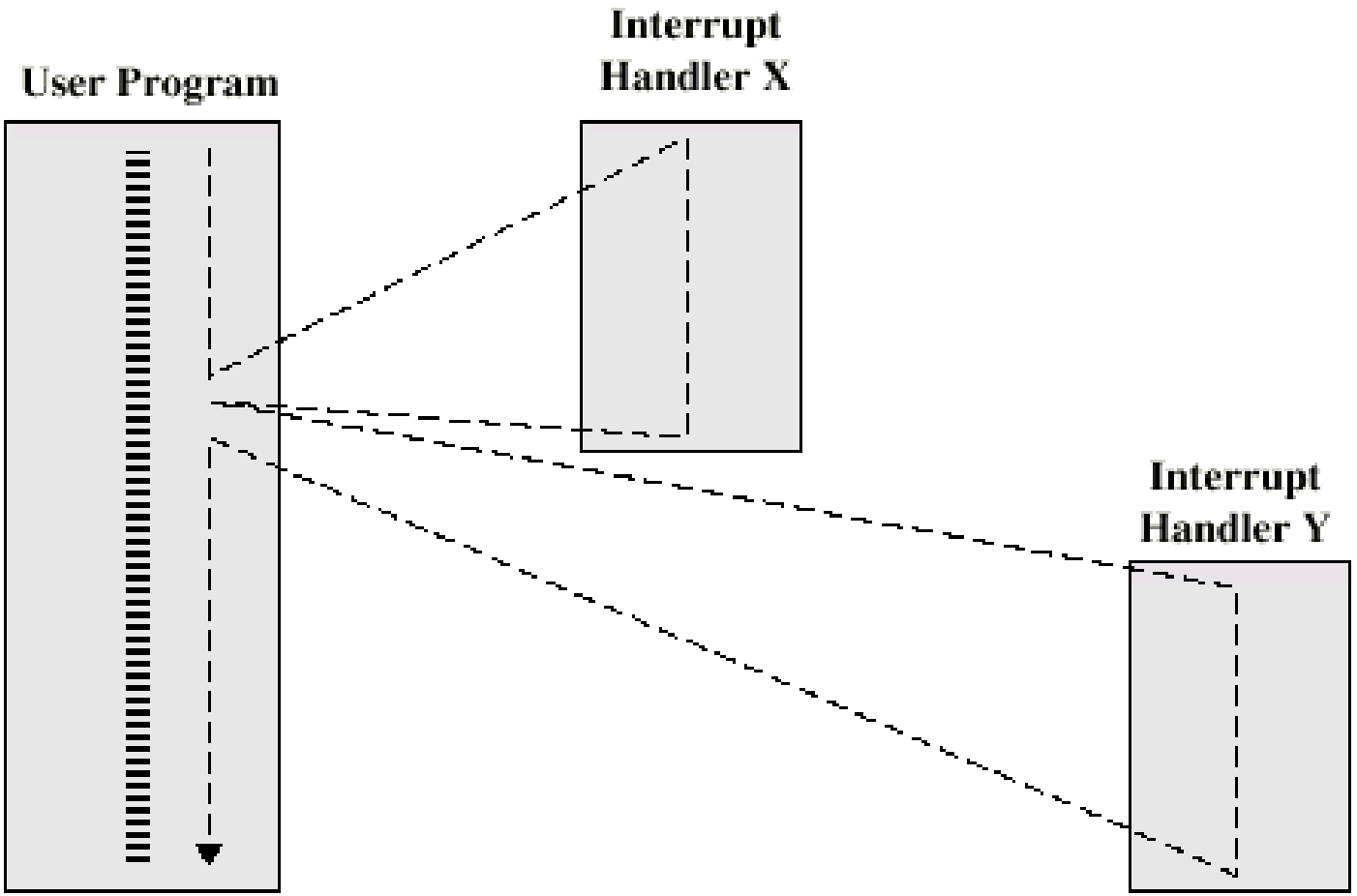

Multiple Interrupts - Nested

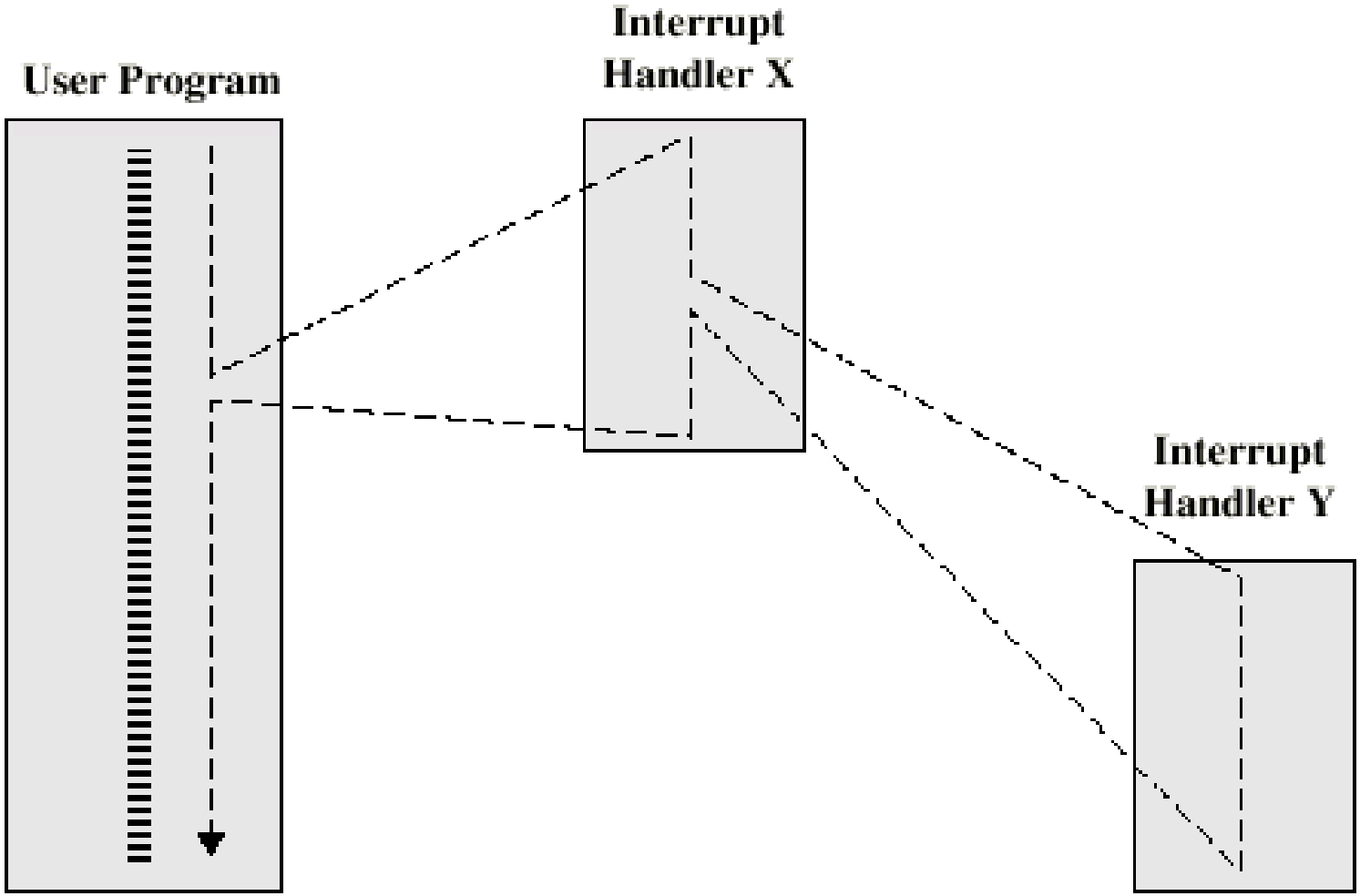

Bus Types

- Dedicated
  - Separate data & address lines
- Multiplexed
  - Shared lines
  - Address valid or data valid control line
  - Advantage - fewer lines
  - Disadvantages
    - More complex control
    - Ultimate performance

Timing

- Co-ordination of events on bus
- Synchronous
  - Events determined by clock signals
  - Control Bus includes clock line
  - A single 1-0 is a bus cycle
  - All devices can read clock line
  - Usually sync on leading edge
  - Usually a single cycle for an event

Synchronous Timing Diagram

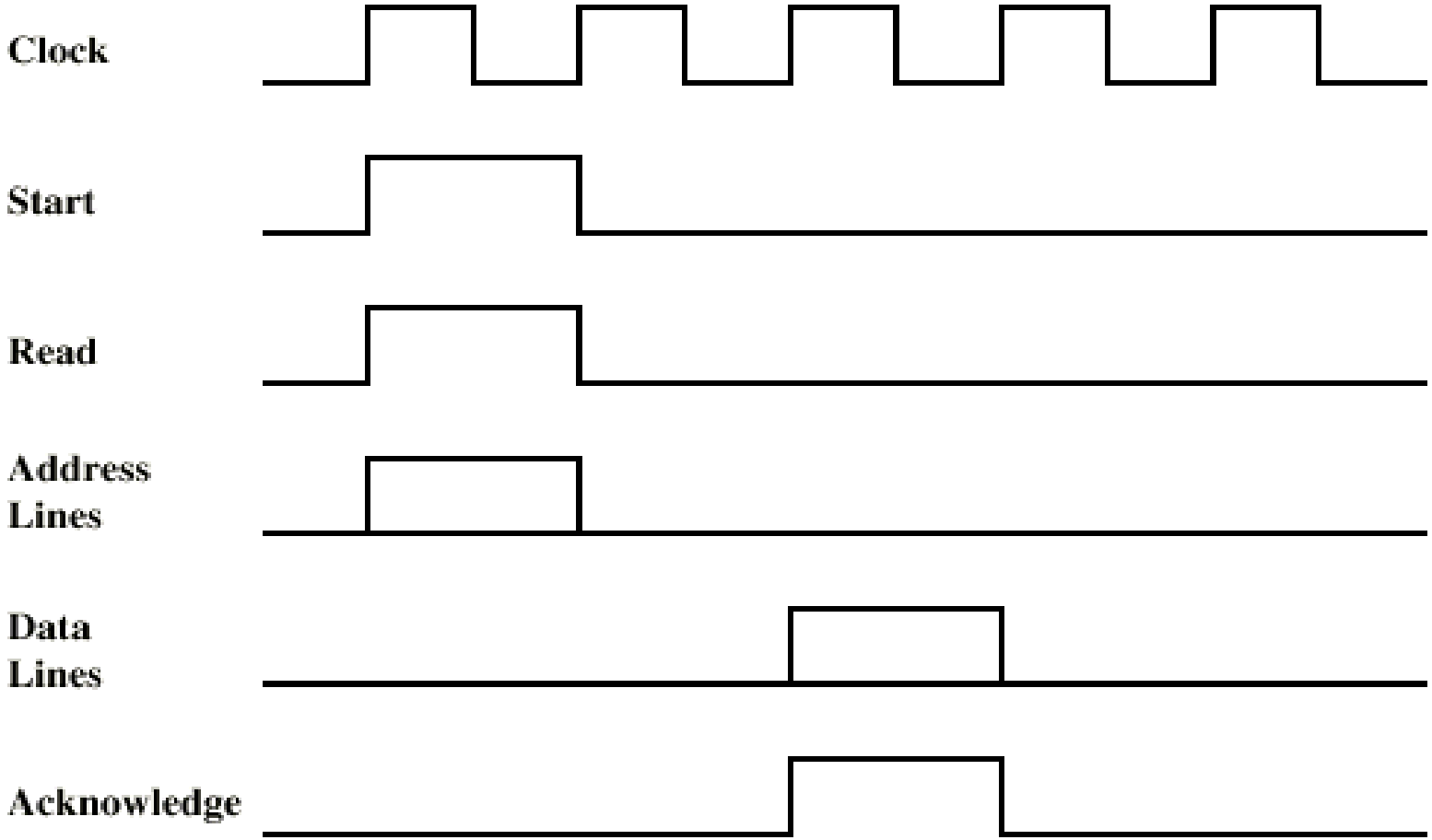

Asynchronous Timing Diagram

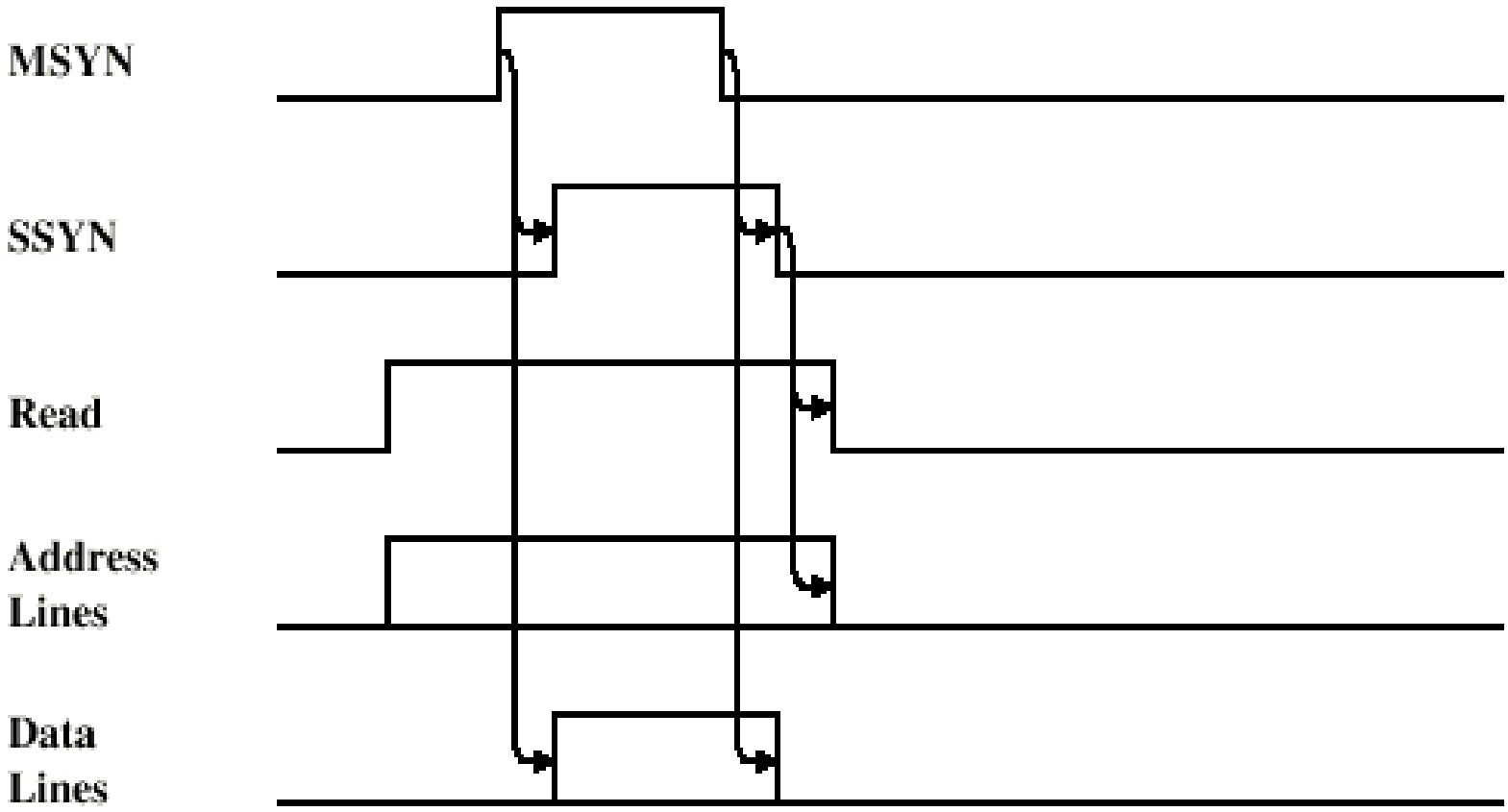

INTERNAL MEMORY

Characteristics

- Location
- Capacity
- Unit of transfer
- Access method
- Performance
- Physical type
- Physical characteristics
- Organisation

Access Methods (1)

- Sequential
  - Start at the beginning and read through in order
  - Access time depends on location of data and previous location
  - e.g. tape
- Direct
  - Individual blocks have unique address
  - Access is by jumping to vicinity plus sequential search
  - Access time depends on location and previous location
  - e.g. disk

Access Methods (2)

- Random
  - Individual addresses identify locations exactly
  - Access time is independent of location or previous access
  - e.g. RAM
- Associative
  - Data is located by a comparison with contents of a portion of the store
  - Access time is independent of location or previous access
  - e.g. cache

Performance

- Access time
  - Time between presenting the address and getting the valid data
- Memory Cycle time
  - Time may be required for the memory to “recover” before next access
  - Cycle time is access + recovery
- Transfer Rate
  - Rate at which data can be moved

Hierarchy List

- Registers
- L1 Cache
- L2 Cache
- Main memory
- Disk cache
- Disk
- Optical
- Tape

Locality of Reference

- During the course of the execution of a program, memory references tend to cluster
- e.g. Loops
- There are two basic types of reference locality.
  - Temporal locality refers to the reuse of specific data and/or resources within relatively small time durations.
  - Spatial locality refers to the use of data elements within relatively close storage locations.
  - Sequential locality, a special case of spatial locality, occurs when data elements are arranged and accessed linearly, e.g., traversing the elements in a one-dimensional array.

Refreshing

- Refresh circuit included on chip
- Disable chip
- Count through rows
- Read & Write back
- Takes time
- Slows down apparent performance

* RAM is Misnamed as all semiconductor memory is random access

Typical 16 Mb DRAM (4M x 4)

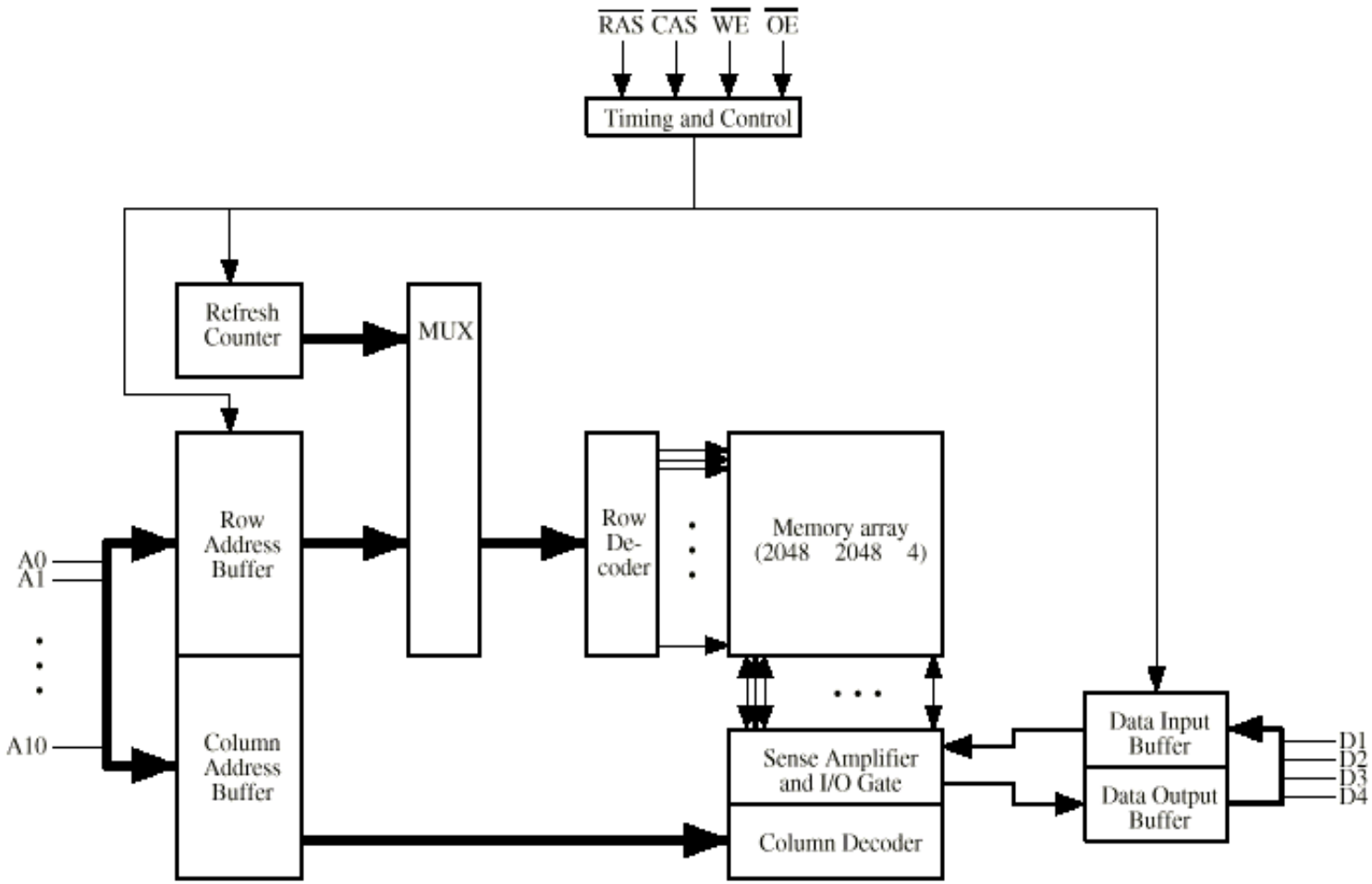

Module Organisation

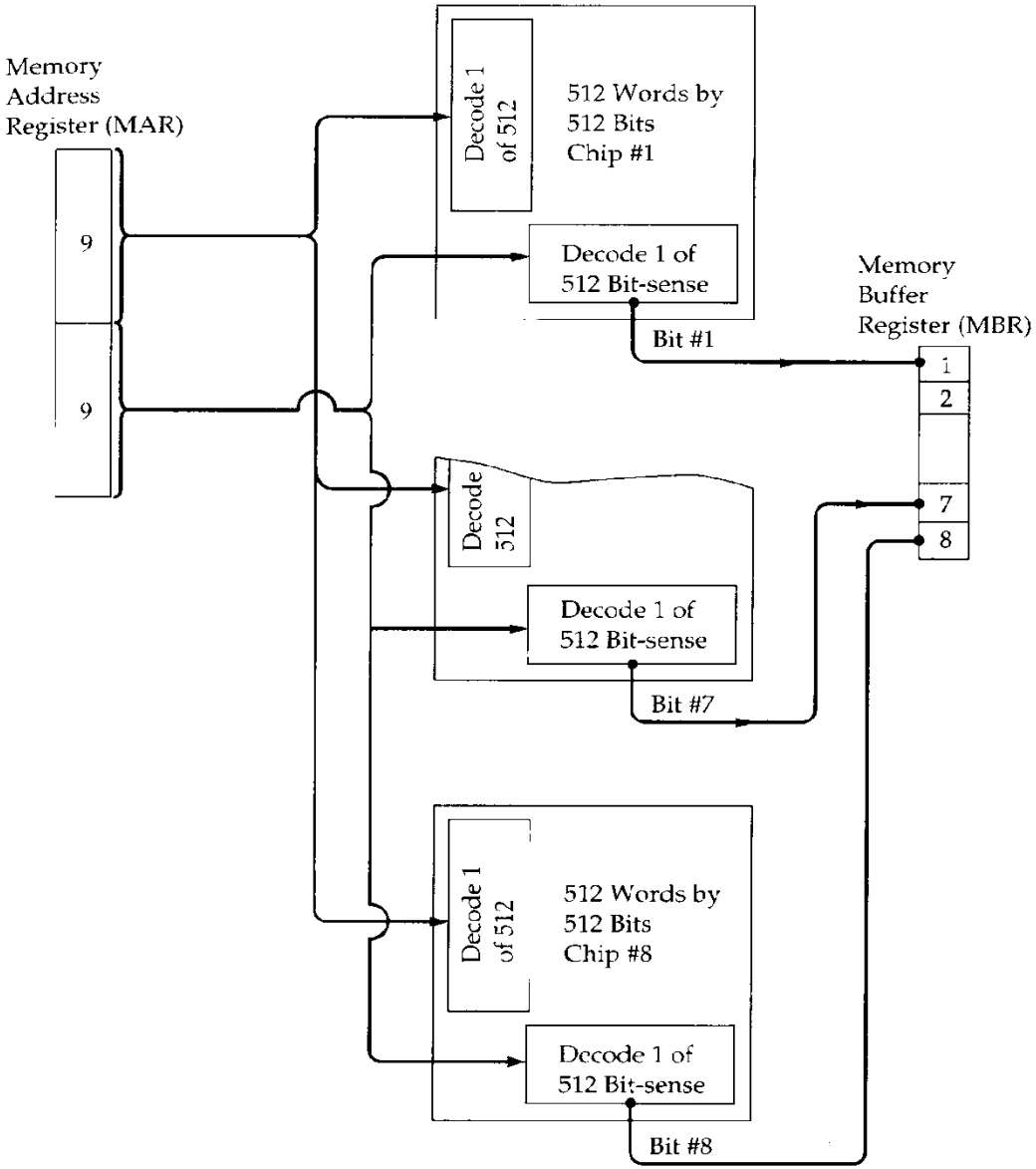

Module Organisation (2)

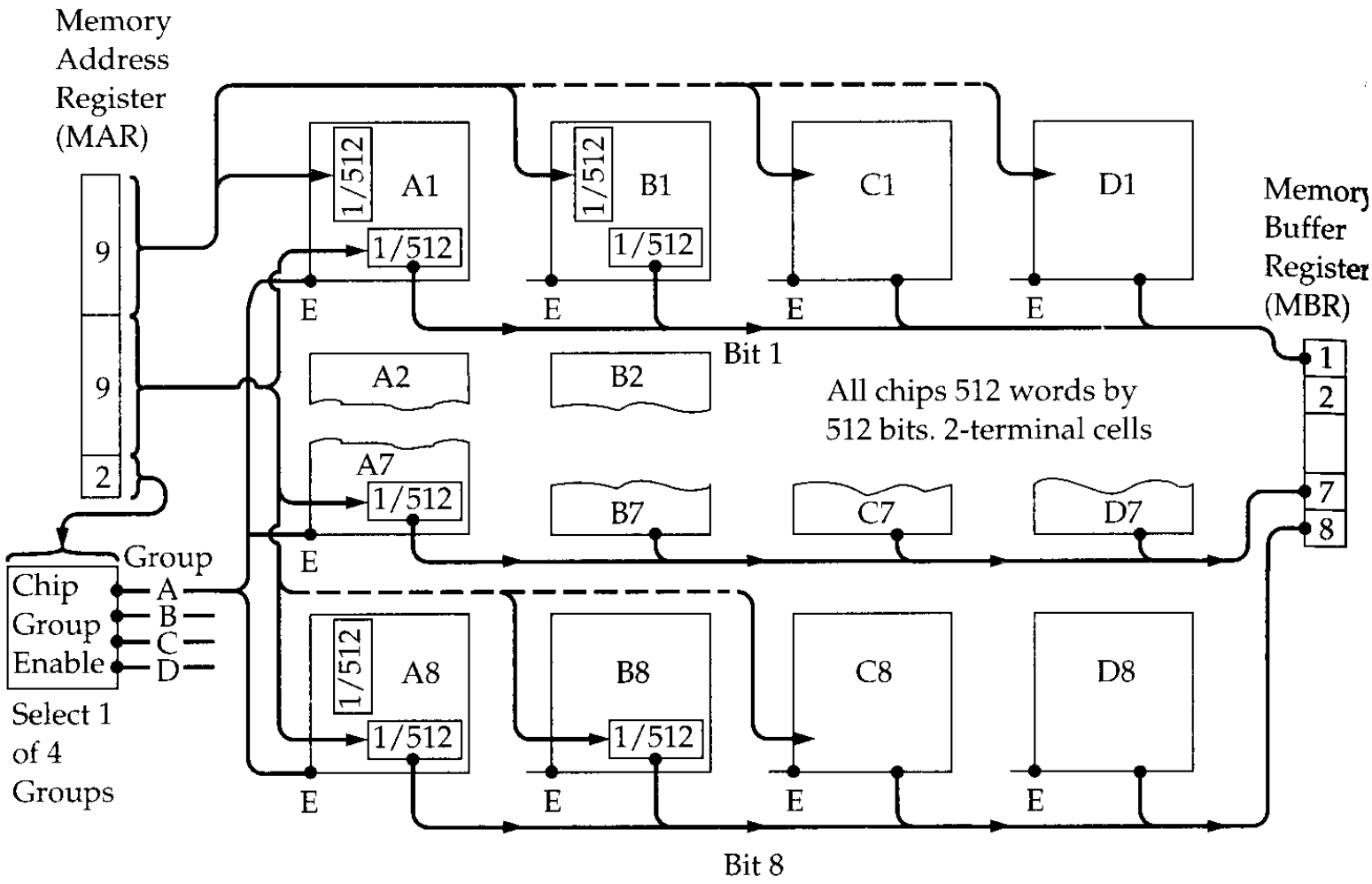

Error Correction

- Hard Failure
  - Permanent defect
- Soft Error
  - Random, non-destructive
  - No permanent damage to memory
- Detected using Hamming error correcting code

CACHE MEMORY

Cache

- Small amount of fast memory
- Sits between normal main memory and CPU
- May be located on CPU chip or module

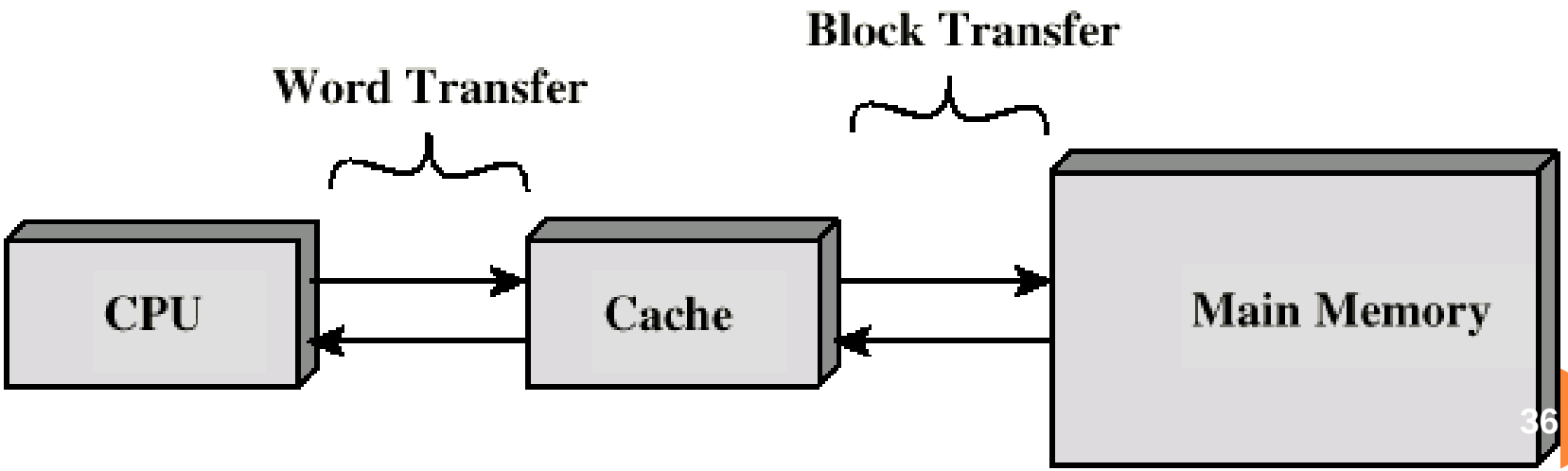

Cache operation - overview

- CPU requests contents of memory location
- Check cache for this data
- If present, get from cache (fast)
- If not present, read required block from main memory to cache
- Then deliver from cache to CPU
- Cache includes tags to identify which block of main memory is in each cache slot

Cache Design

- Size
- Mapping Function
- Replacement Algorithm
- Write Policy
- Block Size
- Number of Caches

Size does matter

- Cost
  - More cache is expensive
- Speed
  - More cache is faster (up to a point)
  - Checking cache for data takes time

Typical Cache Organization

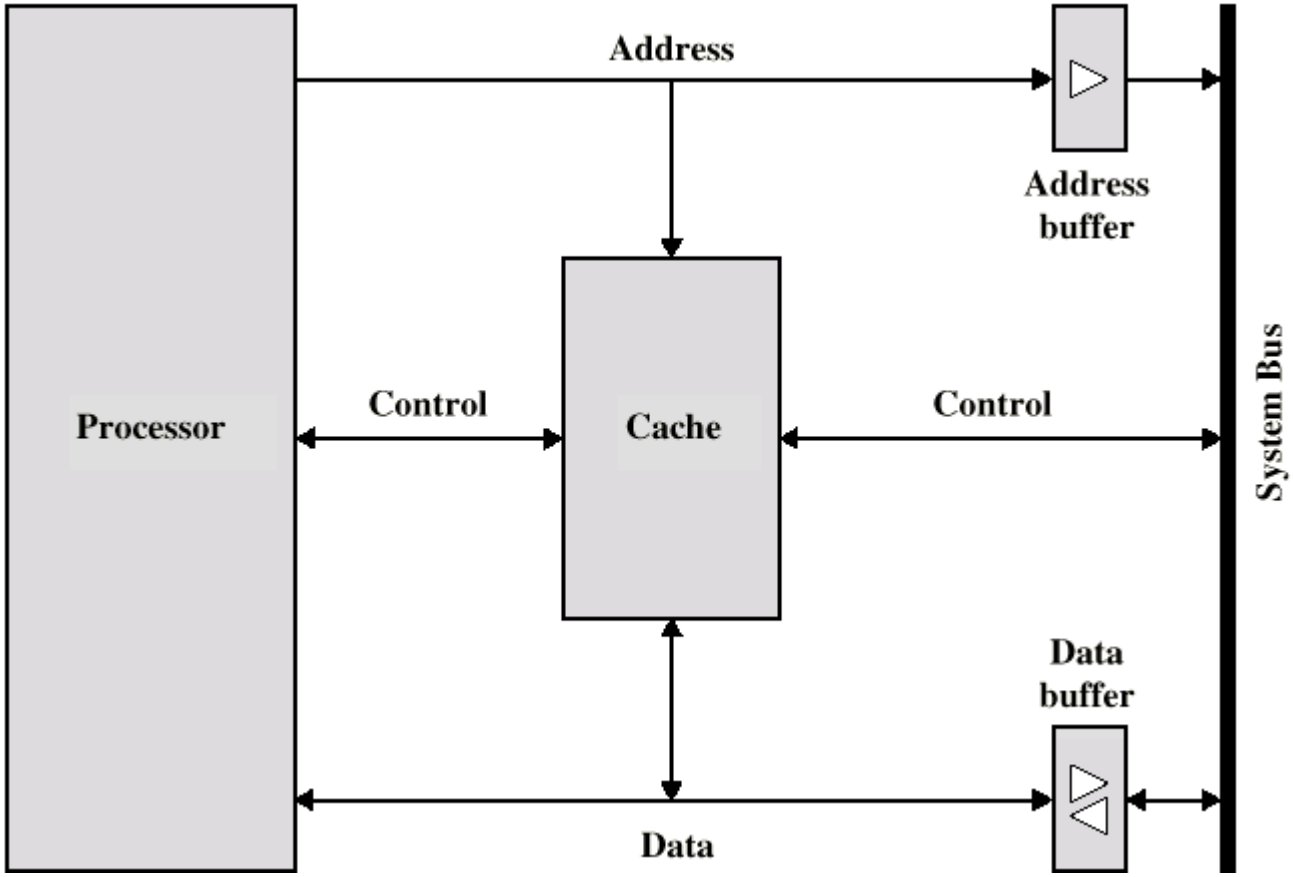

Mapping Function

- Cache of 64kByte
- Cache block of 4 bytes
  - i.e. cache is 16k (2^{14}) lines of 4 bytes
- 16MBytes main memory
- 24 bit address
  - (2^{24}=16M)

Direct Mapping

- Each block of main memory maps to only one cache line
  - i.e. if a block is in cache, it must be in one specific place
- Address is in two parts
- Least Significant w bits identify unique word
- Most Significant s bits specify one memory block
- The MSBs are split into a cache line field r and a tag of s-r (most significant)

Direct Mapping Address Structure

Tag s-r	Line or Slot r	Word w
8	14	2

- 24 bit address
- 2 bit word identifier (4 byte block)
- 22 bit block identifier
  - 8 bit tag (=22-14)
  - 14 bit slot or line
- No two blocks in the same line have the same Tag field
- Check contents of cache by finding line and checking Tag

Direct Mapping Cache Line Table

Cache line	Main Memory blocks held
0	0, m, 2m, 3m…2^s-m
1	1,m+1, 2m+1…2^s-m+1
m-1	m-1, 2m-1,3m-1…2^s-1

Direct Mapping Cache Organization

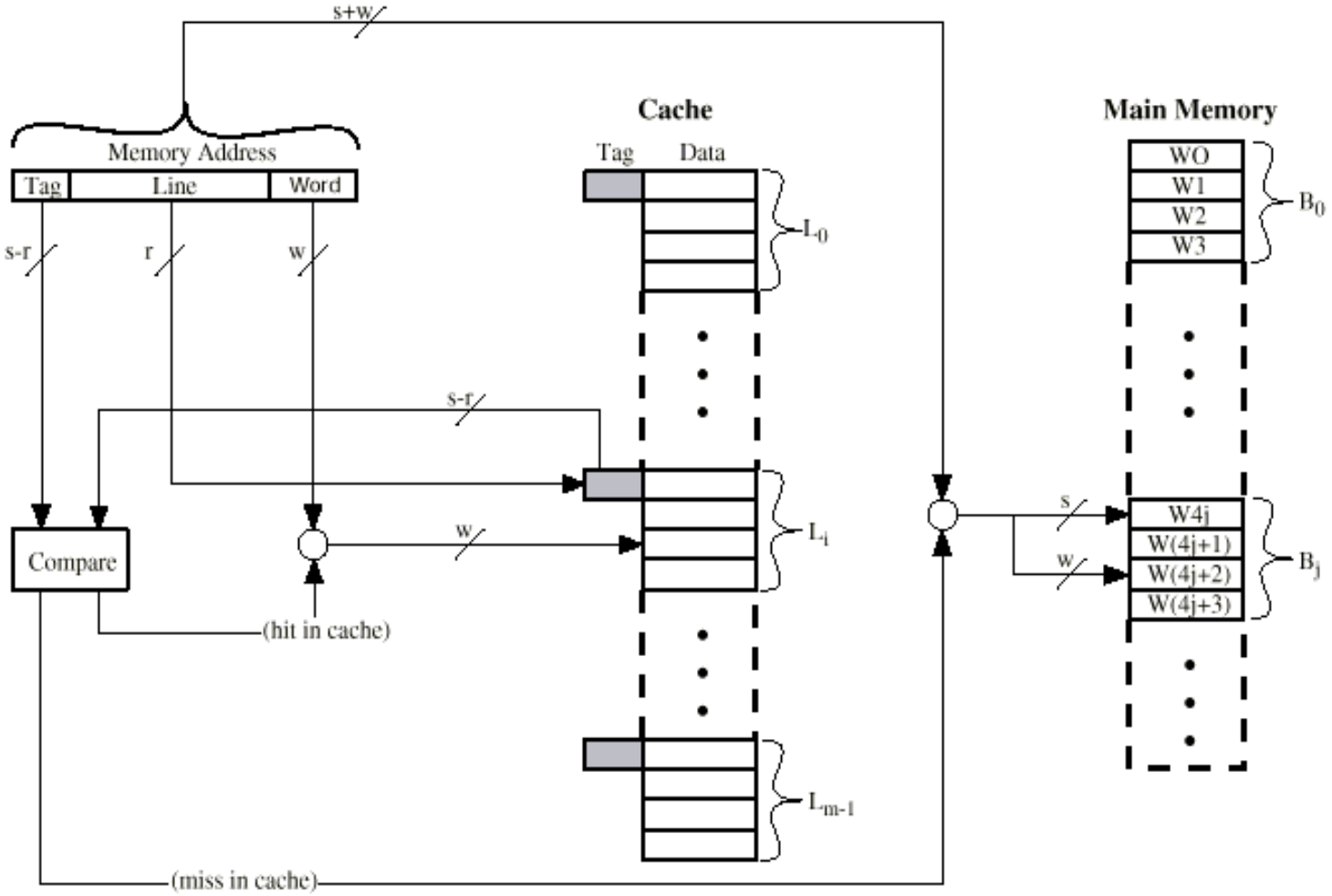

Direct Mapping Example

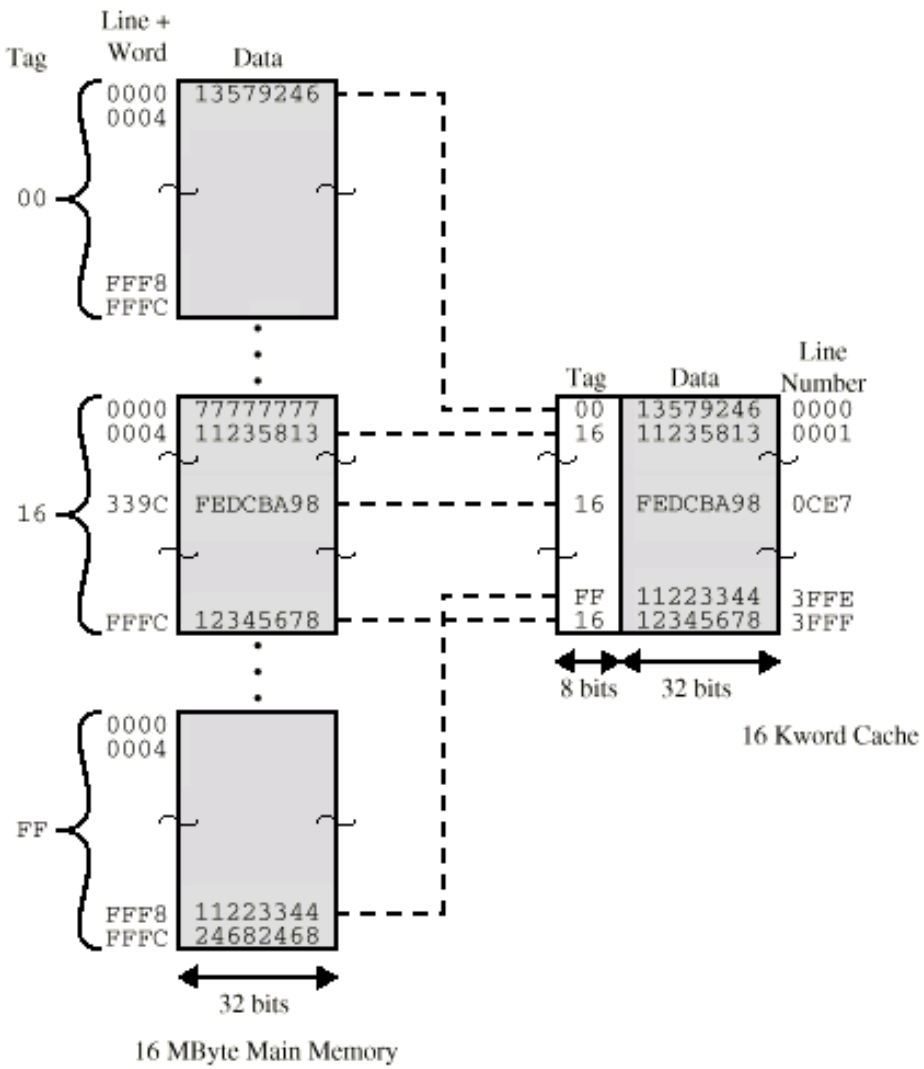

Direct Mapping pros & cons

- Simple
- Inexpensive
- Fixed location for given block
  - If a program accesses 2 blocks that map to the same line repeatedly, cache misses are very high

Associative Mapping

- A main memory block can load into any line of cache
- Memory address is interpreted as tag and word
- Tag uniquely identifies block of memory
- Every line's tag is examined for a match
- Cache searching gets expensive

Fully Associative Cache Organization

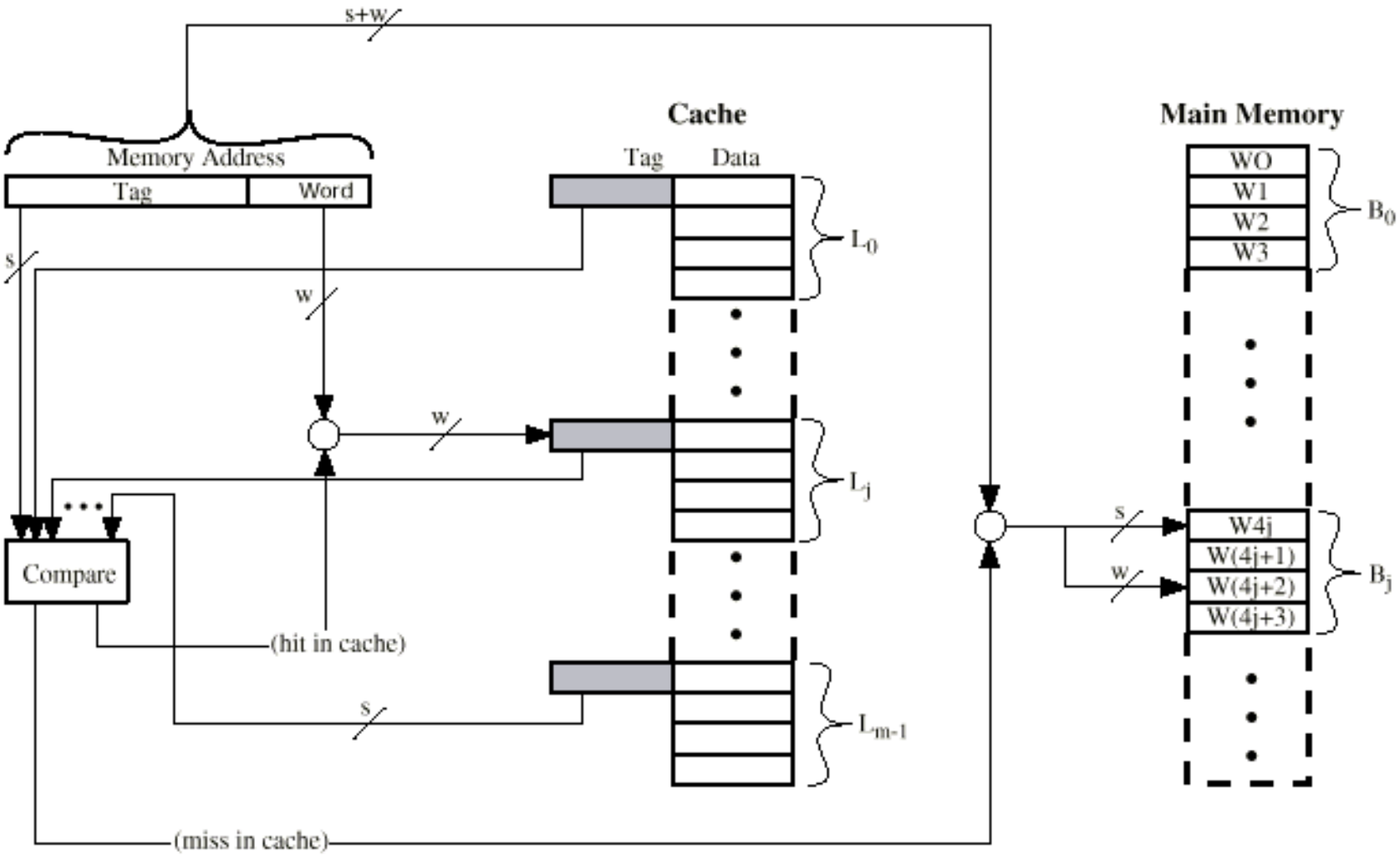

Associative Mapping Example

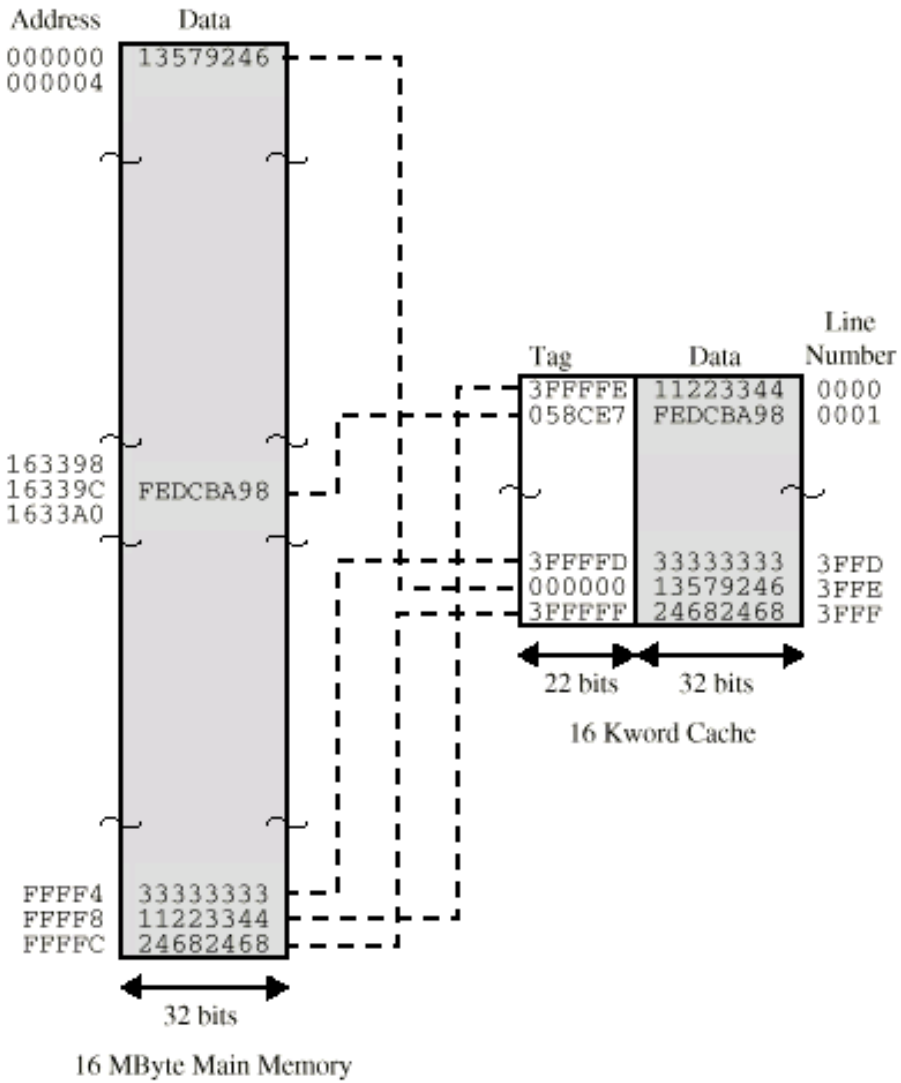

Associative Mapping Address Structure

Tag 22 bit	Word 2 bit

- 22 bit tag stored with each 32 bit block of data
- Compare tag field with tag entry in cache to check for hit
- Least significant 2 bits of address identify which 16 bit word is required from 32 bit data block
- e.g.

Address	Tag	Data	Cache line
FFFFFC	FFFFFC	24682468	3FFF

Set Associative Mapping

- Cache is divided into a number of sets
- Each set contains a number of lines
- A given block maps to any line in a given set
  - e.g. Block B can be in any line of set i
- e.g. 2 lines per set
  - 2 way associative mapping
  - A given block can be in one of 2 lines in only one set

Set Associative Mapping Example

- 13 bit set number
- Block number in main memory is modulo 2^{13}
- 000000, 00A000, 00B000, 00C000 … map to same set

Two Way Set Associative Cache Organization

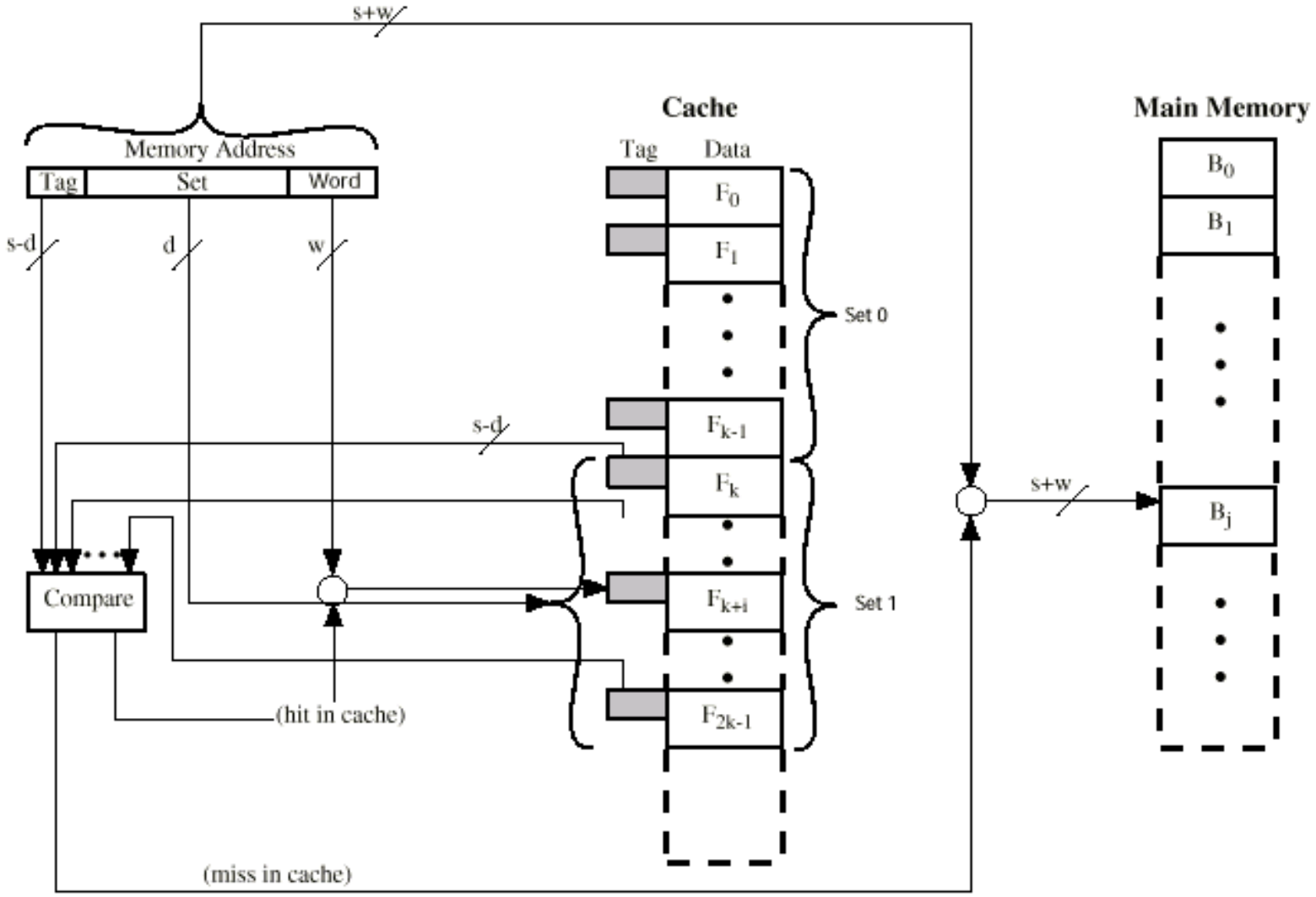

Set Associative Mapping Address Structure

Tag 9 bit	Set 13 bit	Word 2 bit

- Use set field to determine cache set to look in
- Compare tag field to see if we have a hit
- e.g
  - Address Tag Data Set number
  - 1FF 7FFC 1FF 12345678 1FFF
  - 001 7FFC 001 11223344 1FFF

Two Way Set Associative Mapping Example

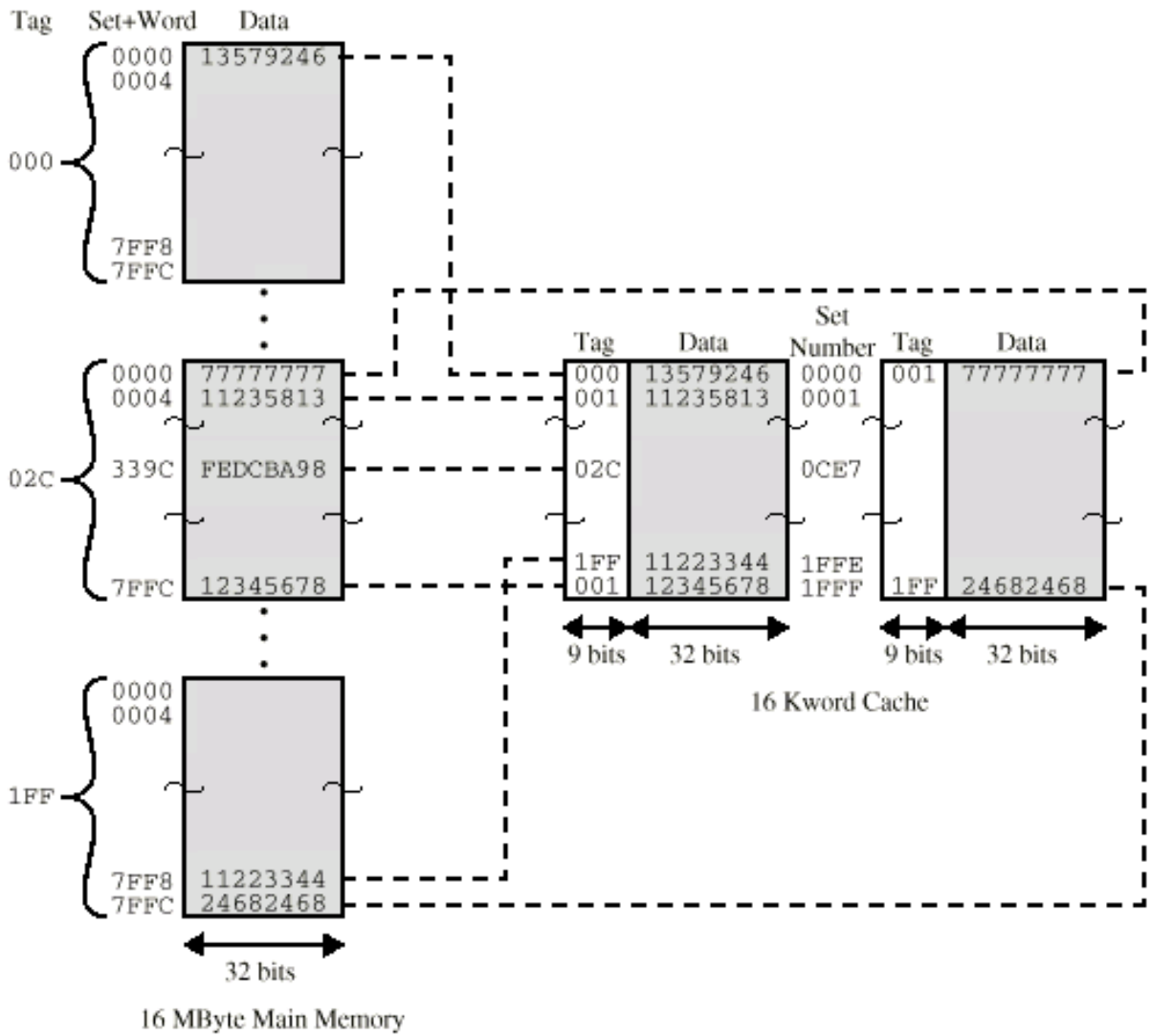

Replacement Algorithms (1) Direct mapping

- No choice
- Each block only maps to one line
- Replace that line

Replacement Algorithms (2) Associative & Set Associative

- Hardware implemented algorithm (speed)
- Least Recently used (LRU)
- e.g. in 2 way set associative
  - Which of the 2 block is lru?
- First in first out (FIFO)
  - replace block that has been in cache longest
- Least frequently used
  - replace block which has had fewest hits
- Random

Write Policy

- Must not overwrite a cache block unless main memory is up to date
- Multiple CPUs may have individual caches
- I/O may address main memory directly

Write through

- All writes go to main memory as well as cache
- Multiple CPUs can monitor main memory traffic to keep local (to CPU) cache up to date
- Lots of traffic
- Slows down writes

- Remember bogus write through caches!

Write back

- Updates initially made in cache only
- Update bit for cache slot is set when update occurs
- If block is to be replaced, write to main memory only if update bit is set
- Other caches get out of sync
- I/O must access main memory through cache
- N.B. 15% of memory references are writes

Newer RAM Technology (1)

- Basic DRAM same since first RAM chips
- Enhanced DRAM
  - Contains small SRAM as well
  - SRAM holds last line read (c.f. Cache!)
- Cache DRAM
  - Larger SRAM component
  - Use as cache or serial buffer

Newer RAM Technology (2)

- Synchronous DRAM (SDRAM)
  - currently on DIMMs
  - Access is synchronized with an external clock
  - Address is presented to RAM
  - RAM finds data (CPU waits in conventional DRAM)
  - Since SDRAM moves data in time with system clock, CPU knows when data will be ready
  - CPU does not have to wait, it can do something else
  - Burst mode allows SDRAM to set up stream of data and fire it out in block

SDRAM

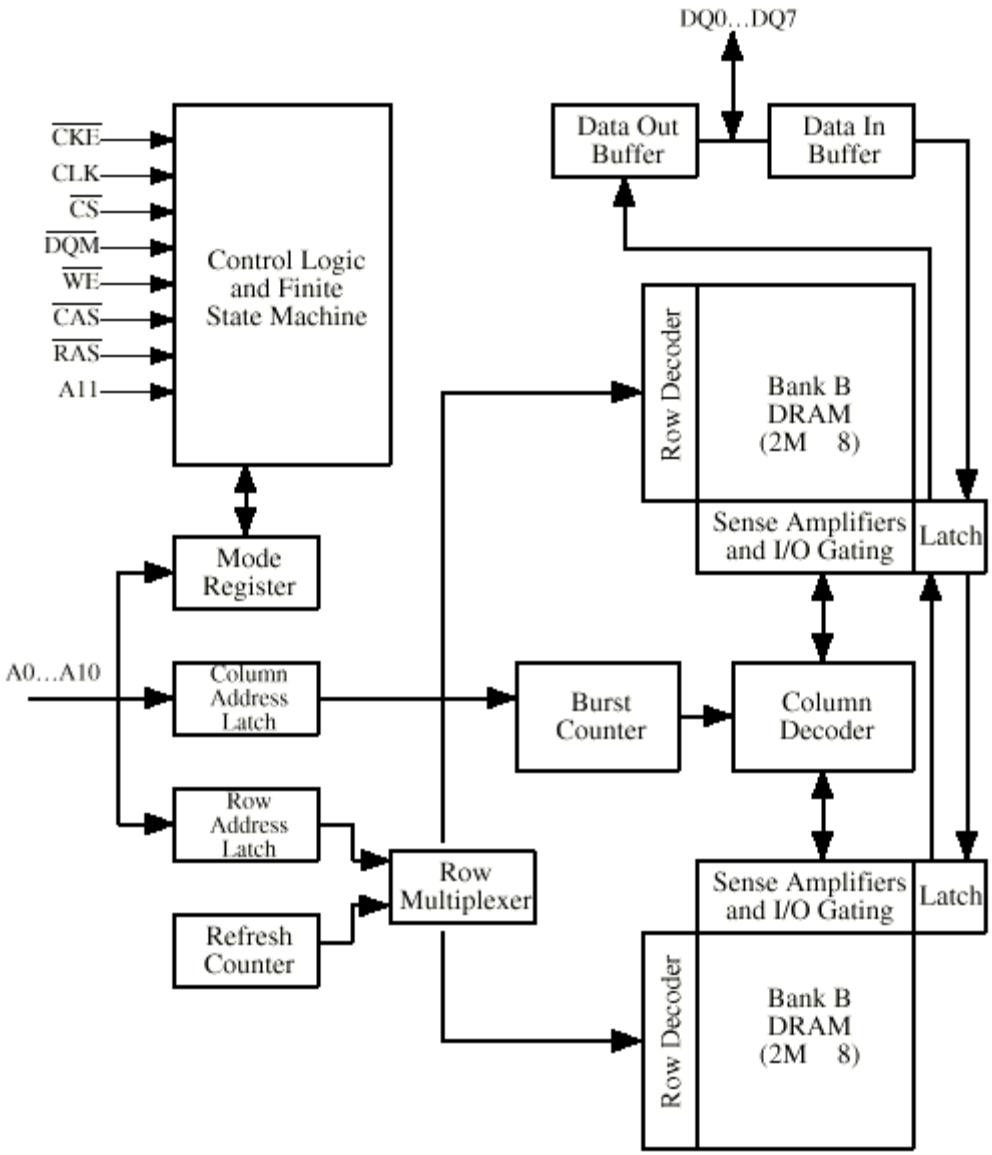
DQ0…DQ7
CKE
CLK
CS
DQM
WE
CAS
RAS
A11
Control Logic and Finite State Machine
Data Out Buffer
Data In Buffer
Row Decoder
Bank B DRAM (2M 8)
Sense Amplifiers and I/O Gating
Latch
Mode Register
A0…A10
Column Address Latch
Burst Counter
Column Decoder
Row Address Latch
Row Multiplexer
Refresh Counter
Sense Amplifiers and I/O Gating
Latch
Row Decoder
Bank B DRAM (2M 8)

Input / Output

Input Output Techniques

- Programmed
- Interrupt driven
- Direct Memory Access (DMA)

Programmed I/O

- CPU has direct control over I/O
  - Sensing status
  - Read/write commands
  - Transferring data
- CPU waits for I/O module to complete operation
- Wastes CPU time

I/O Commands

- CPU issues address
  - Identifies module (& device if >1 per module)
- CPU issues command
  - Control - telling module what to do
    - e.g. spin up disk
  - Test - check status
    - e.g. power? Error?
  - Read/Write
    - Module transfers data via buffer from/to device

I/O Mapping

- Memory mapped I/O
  - Devices and memory share an address space
  - I/O looks just like memory read/write
  - No special commands for I/O
    - Large selection of memory access commands available
- Isolated I/O
  - Separate address spaces
  - Need I/O or memory select lines
  - Special commands for I/O
    - Limited set

Interrupt Driven I/O

- Overcomes CPU waiting
- No repeated CPU checking of device
- I/O module interrupts when ready

Interrupt Driven I/O Basic Operation

- CPU issues read command
- I/O module gets data from peripheral whilst CPU does other work
- I/O module interrupts CPU
- CPU requests data
- I/O module transfers data

CPU Viewpoint

- Issue read command
- Do other work
- Check for interrupt at end of each instruction cycle
- If interrupted:-
  - Save context (registers)
  - Process interrupt
    - Fetch data & store
- See Operating Systems notes

Direct Memory Access

- Interrupt driven and programmed I/O require active CPU intervention
  - Transfer rate is limited
  - CPU is tied up
- DMA is the answer

DMA Function

- Additional Module (hardware) on bus
- DMA controller takes over from CPU for I/O

DMA Operation

- CPU tells DMA controller:-
  - Read/Write
  - Device address
  - Starting address of memory block for data
  - Amount of data to be transferred
- CPU carries on with other work
- DMA controller deals with transfer
- DMA controller sends interrupt when finished

DMA Transfer
Cycle Stealing

- DMA controller takes over bus for a cycle
- Transfer of one word of data
- Not an interrupt
  - CPU does not switch context
- CPU suspended just before it accesses bus
  - i.e. before an operand or data fetch or a data write
- Slows down CPU but not as much as CPU doing transfer

Small Computer Systems Interface (SCSI)

- Parallel interface
- 8, 16, 32 bit data lines
- Daisy chained
- Devices are independent
- Devices can communicate with each other as well as host

Operating System

Layers and Views of a Computer System

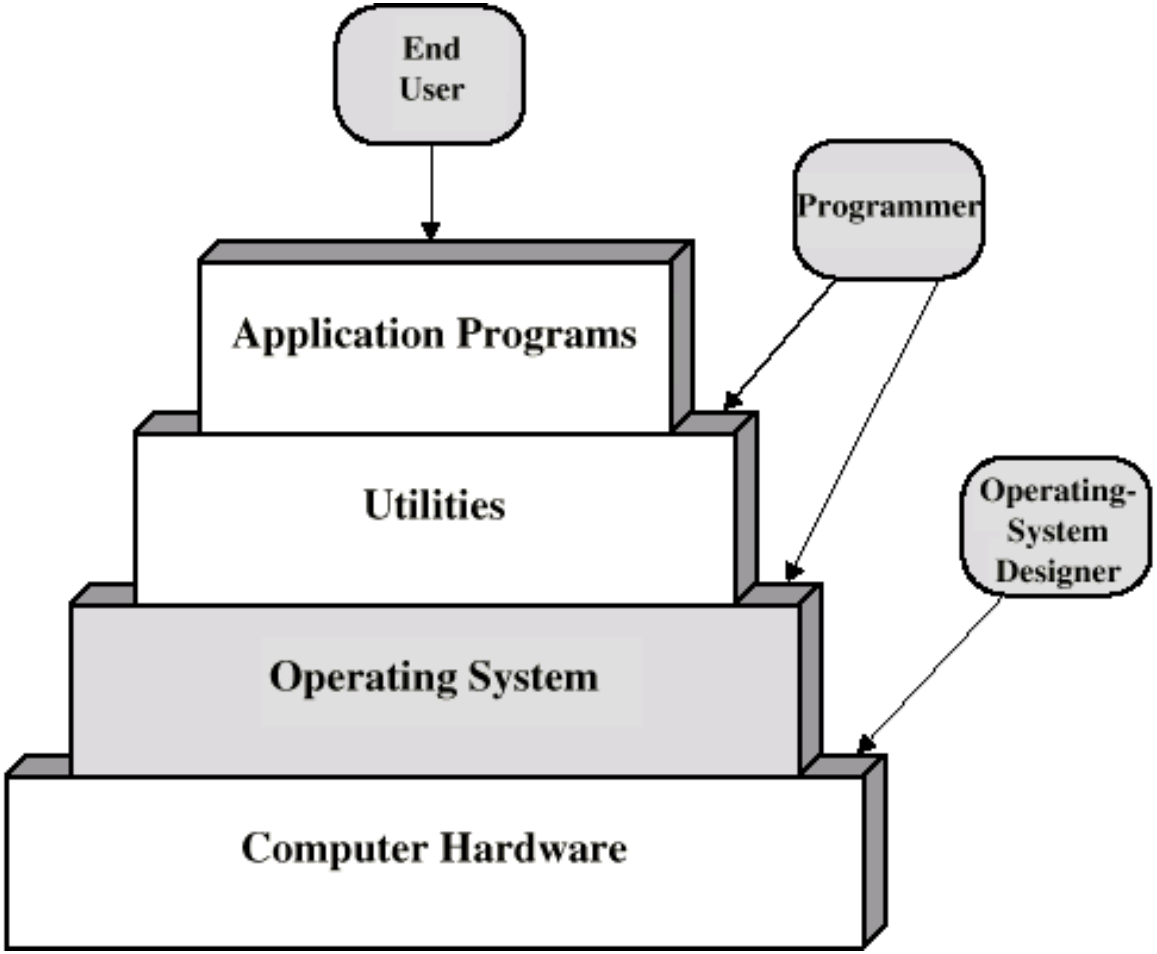

Single Program

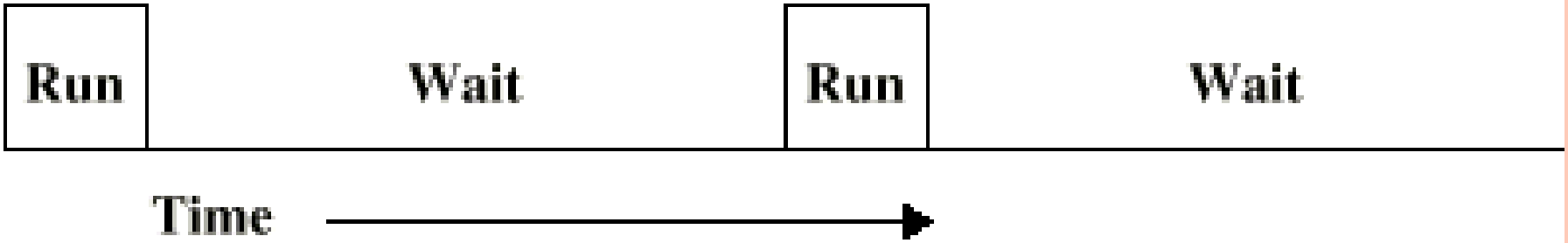

Multi-Programming with Two Programs

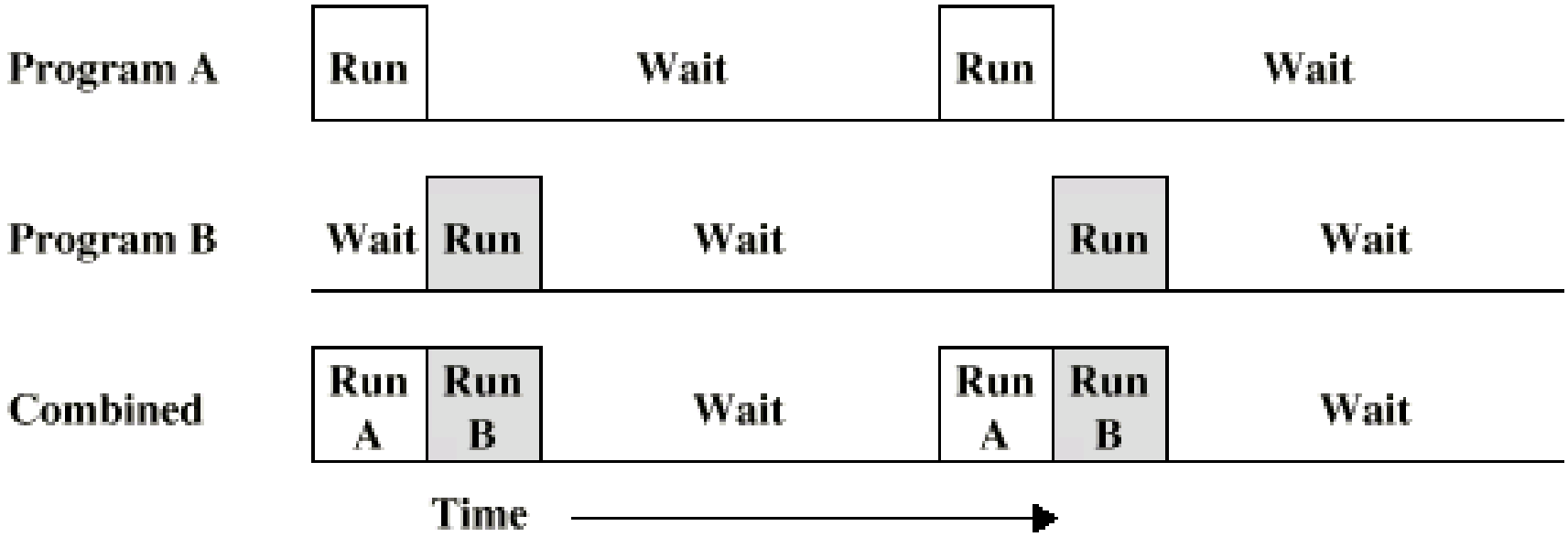

Multi-Programming with Three Programs

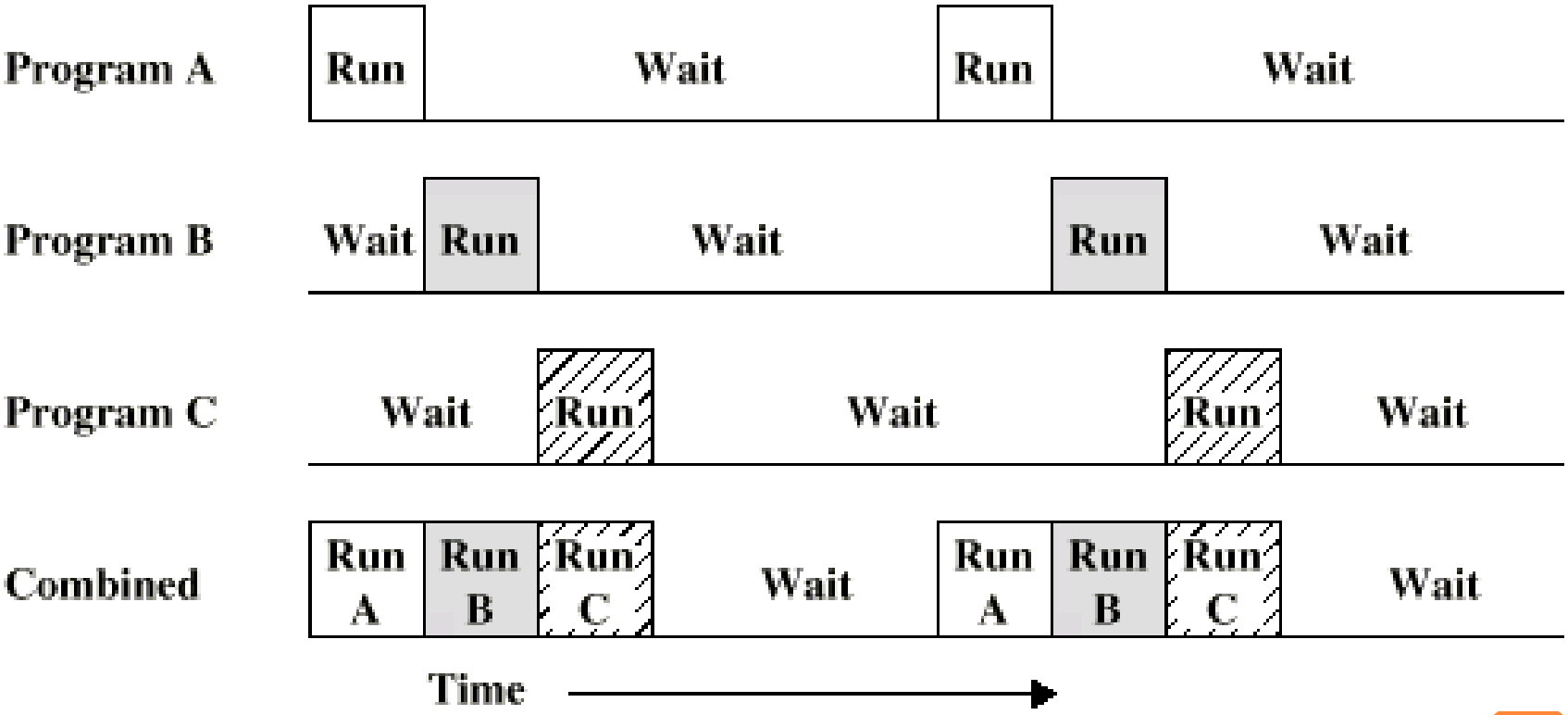

Swapping

- Problem: I/O is so slow compared with CPU that even in multi-programming system, CPU can be idle most of the time
- Solutions:
  - Increase main memory
    - Expensive
    - Leads to larger programs
  - Swapping

What is Swapping?

- Long term queue of processes stored on disk
- Processes “swapped” in as space becomes available
- As a process completes it is moved out of main memory
- If none of the processes in memory are ready (i.e. all I/O blocked)
  - Swap out a blocked process to intermediate queue
  - Swap in a ready process or a new process
  - But swapping is an I/O process…

Partitioning

- Splitting memory into sections to allocate to processes (including Operating System)
- Fixed-sized partitions
  - May not be equal size
  - Process is fitted into smallest hole that will take it (best fit)
  - Some wasted memory
  - Leads to variable sized partitions

Fixed Partitioning

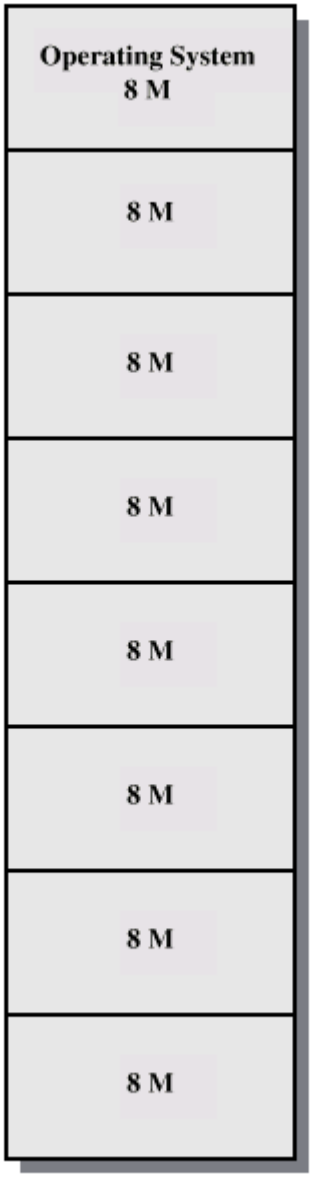

(a) Equal-size partitions

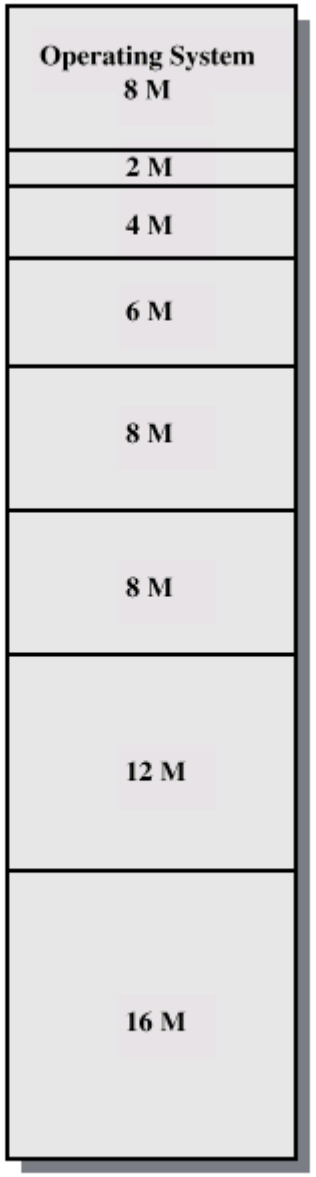

(b) Unequal-size partitions

Variable Sized Partitions (1)

- Allocate exactly the required memory to a process
- This leads to a hole at the end of memory, too small to use
  - Only one small hole - less waste
- When all processes are blocked, swap out a process and bring in another
- New process may be smaller than swapped out process
- Another hole

Variable Sized Partitions (2)

- Eventually have lots of holes (fragmentation)
- Solutions:
  - Coalesce - Join adjacent holes into one large hole
  - Compaction - From time to time go through memory and move all hole into one free block (c.f. disk de-fragmentation)

Effect of Dynamic Partitioning

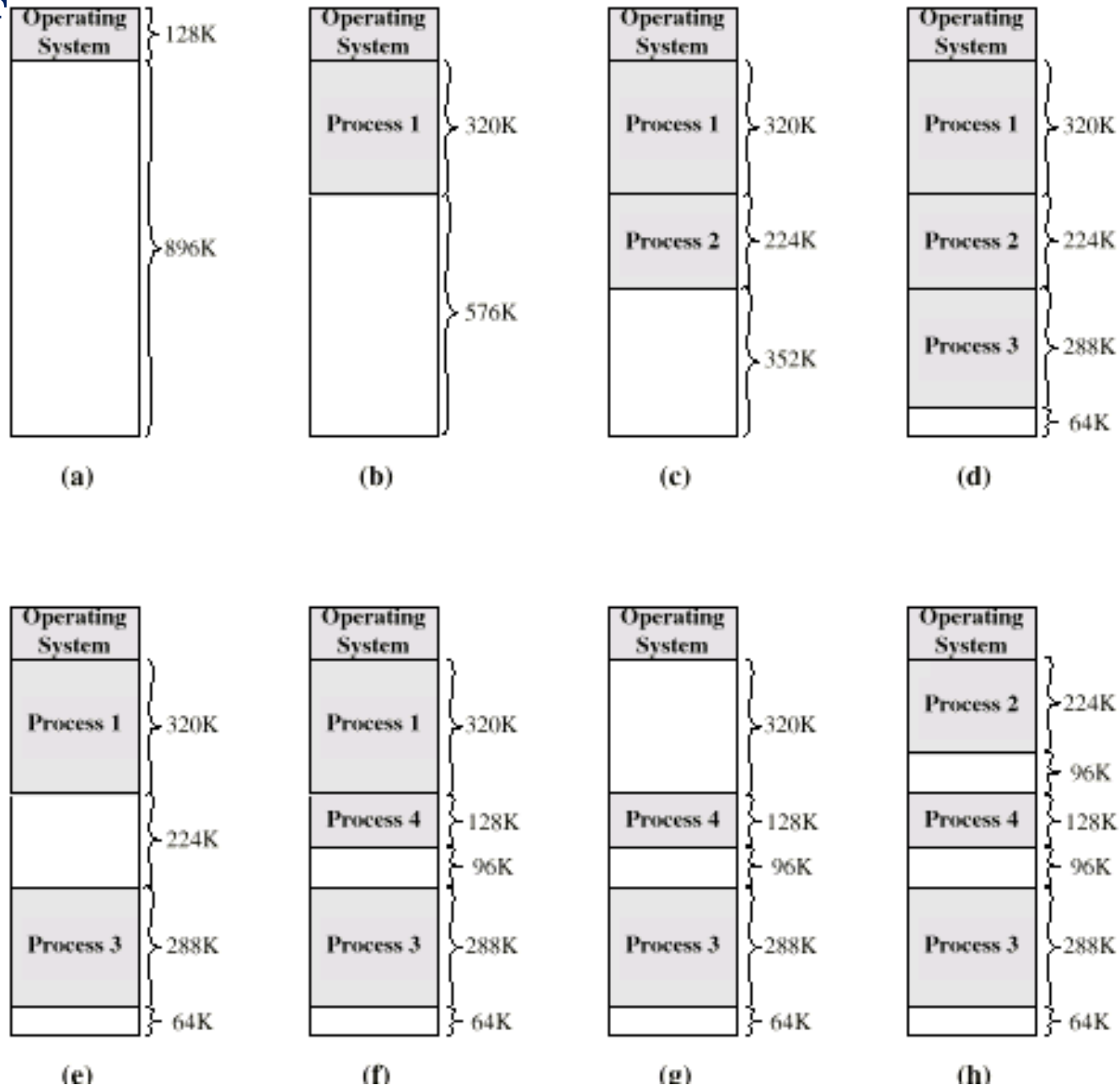

Relocation

- No guarantee that process will load into the same place in memory
- Instructions contain addresses
  - Locations of data
  - Addresses for instructions (branching)
- Logical address - relative to beginning of program
- Physical address - actual location in memory (this time)
- Automatic conversion using base address

Paging

- Split memory into equal sized, small chunks - page frames
- Split programs (processes) into equal sized small chunks - pages
- Allocate the required number page frames to a process
- Operating System maintains list of free frames
- A process does not require contiguous page frames
- Use page table to keep track

Logical and Physical Addresses - Paging

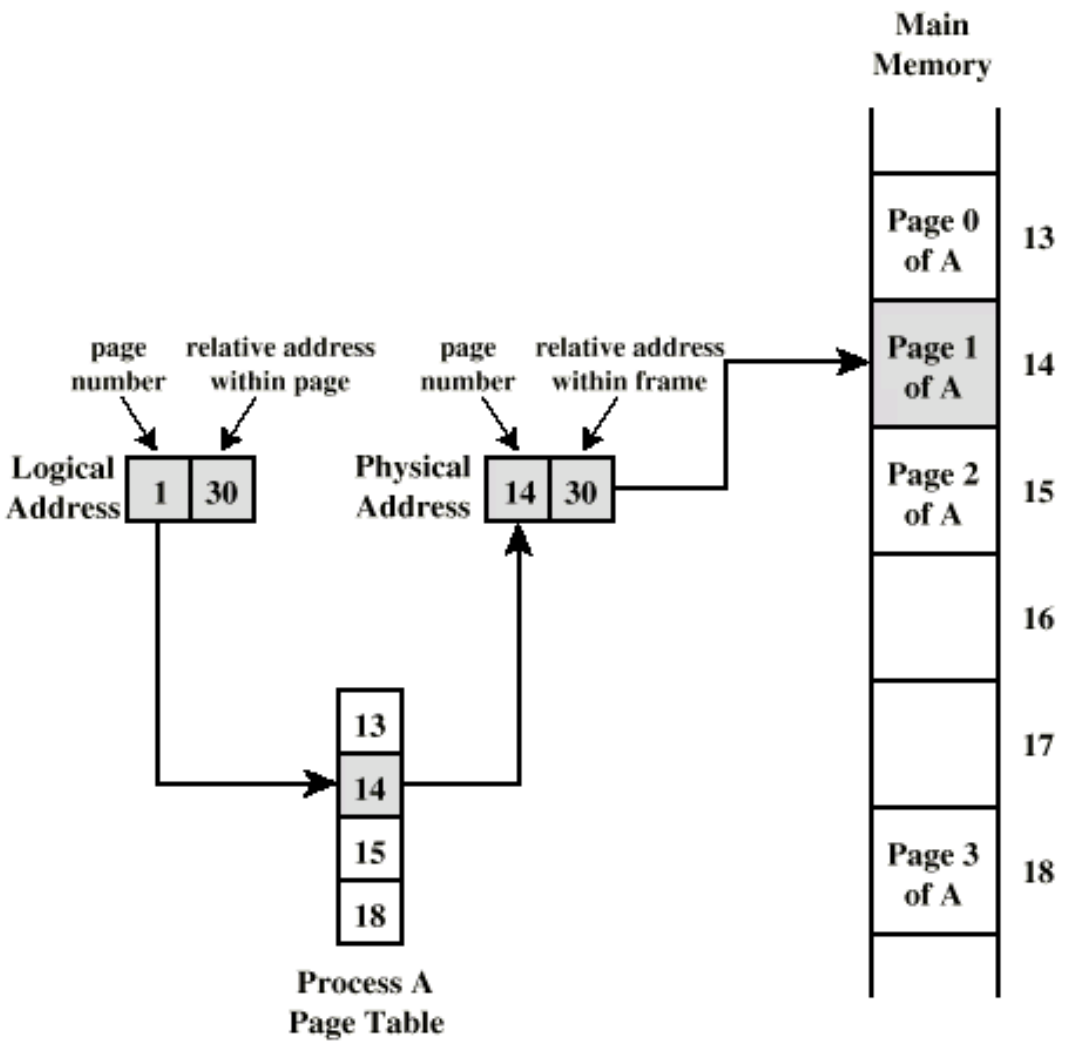

Virtual Memory

- Demand paging
  - Do not require all pages of a process in memory
  - Bring in pages as required
- Page fault
  - Required page is not in memory
  - Operating System must swap in required page
  - May need to swap out a page to make space
  - Select page to throw out based on recent history

Thrashing

- Too many processes in too little memory
- Operating System spends all its time swapping
- Little or no real work is done
- Disk light is on all the time

- Solutions
  - Good page replacement algorithms
  - Reduce number of processes running
  - Fit more memory

Bonus

- We do not need all of a process in memory for it to run
- We can swap in pages as required
- So - we can now run processes that are bigger than total memory available!

- Main memory is called real memory
- User/programmer sees much bigger memory - virtual memory

Page Table Structure

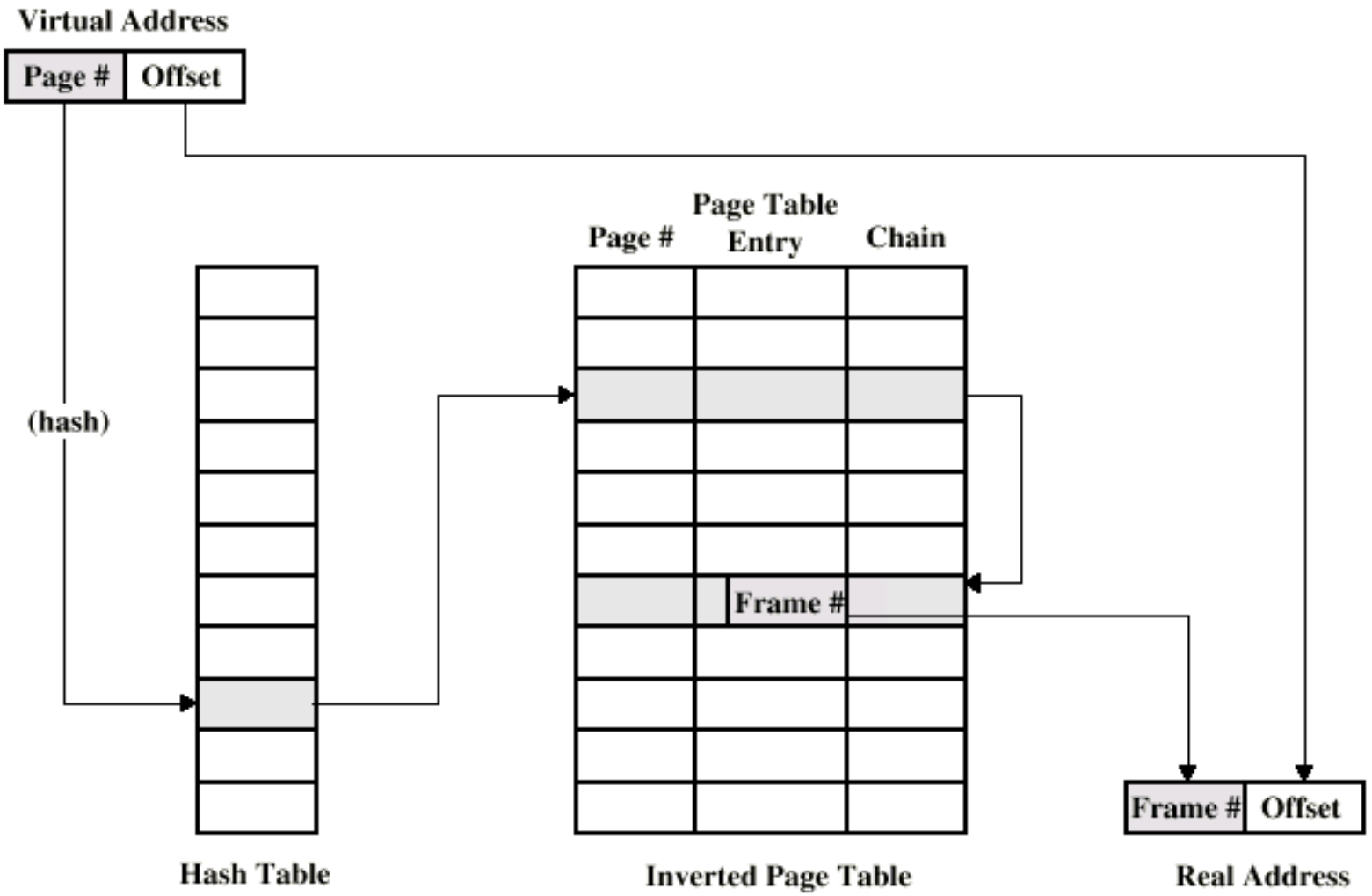

Segmentation

- Paging is not (usually) visible to the programmer
- Segmentation is visible to the programmer
- Usually different segments allocated to program and data
- May be a number of program and data segments

Advantages of Segmentation

- Simplifies handling of growing data structures
- Allows programs to be altered and recompiled independently, without re-linking and re-loading
- Lends itself to sharing among processes
- Lends itself to protection
- Some systems combine segmentation with paging

Computer Arithmetic

Multiplication Example

```
      1011   Multiplicand (11 dec)
    x 1101   Multiplier     (13 dec)
  ---------
      1011   Partial products
     0000    Note: if multiplier bit is 1 copy
    1011            multiplicand (place value)
   1011              otherwise zero
  ----------
   10001111          Product (143 dec)
  ----------
```

Note: need double length result

Unsigned Binary Multiplication

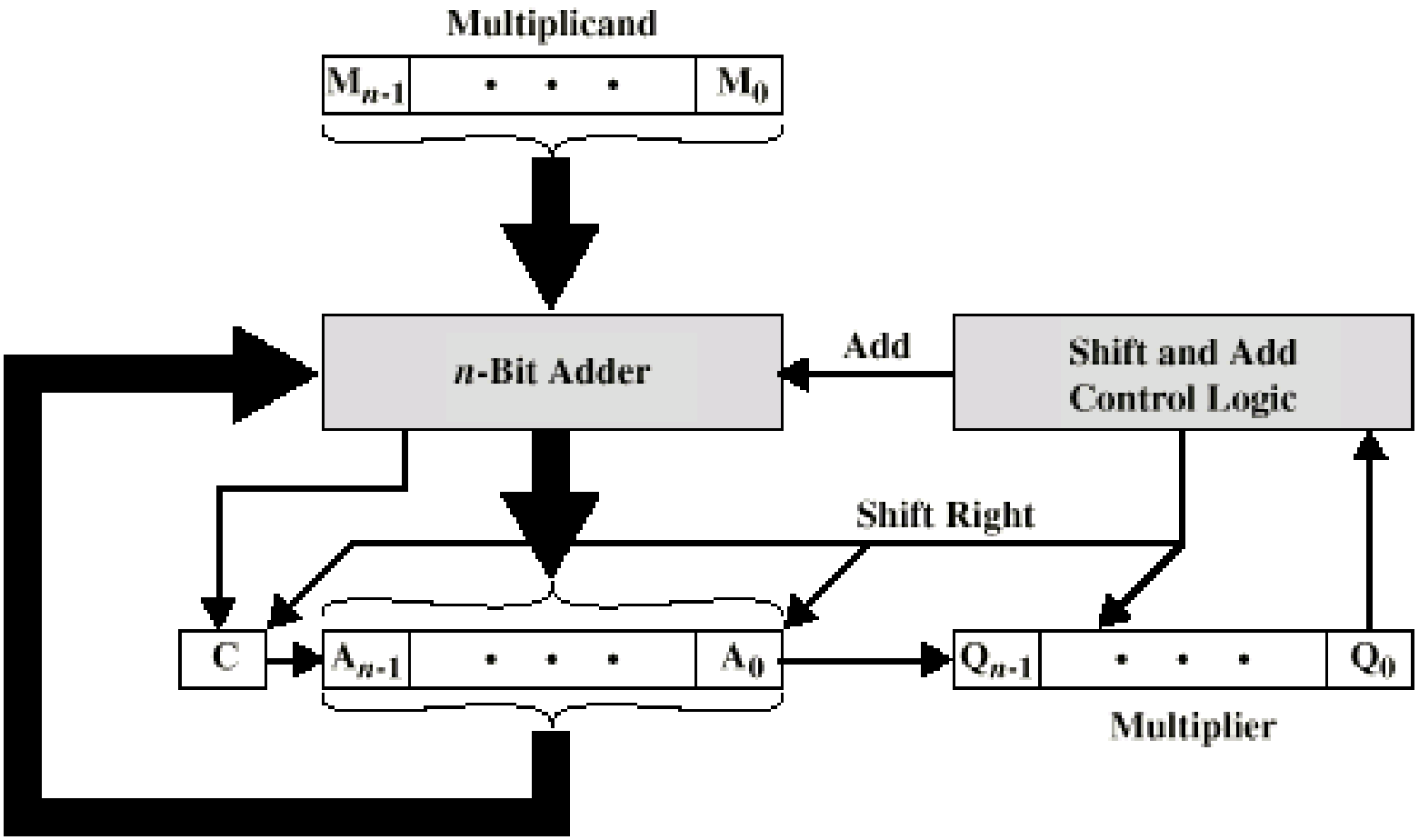

(a) Block Diagram

Execution of Example

C	A	Q	M		
0	0000	1101	1011	Initial Values	
0	1011	1101	1011	Add	First Cycle
0	0101	1110	1011	Shift	
0	0010	1111	1011	Shift	Second Cycle
0	1101	1111	1011	Add	Third Cycle
0	0110	1111	1011	Shift	
1	0001	1111	1011	Add	Fourth Cycle
0	1000	1111	1011	Shift	

Flowchart for Unsigned Binary Multiplication

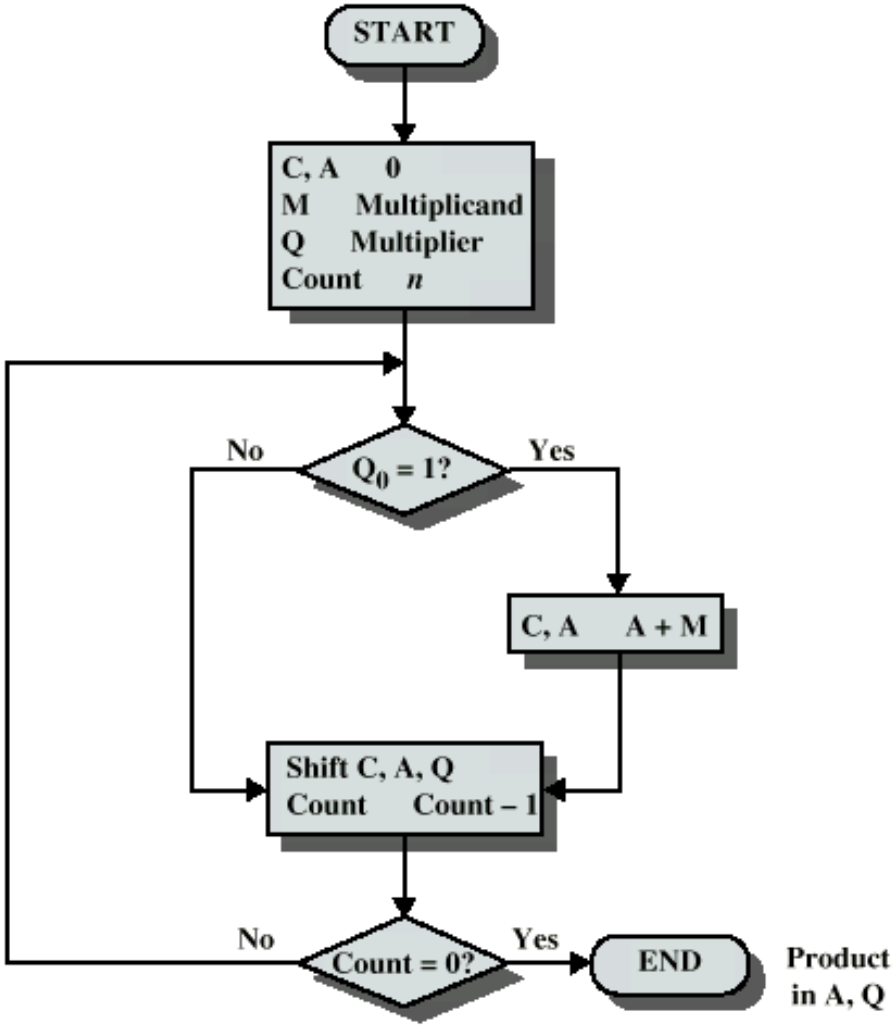

Multiplying Negative Numbers

- This does not work!
- Solution 1
  - Convert to positive if required
  - Multiply as above
  - If signs were different, negate answer
- Solution 2
  - Booth's algorithm

Booth's Algorithm

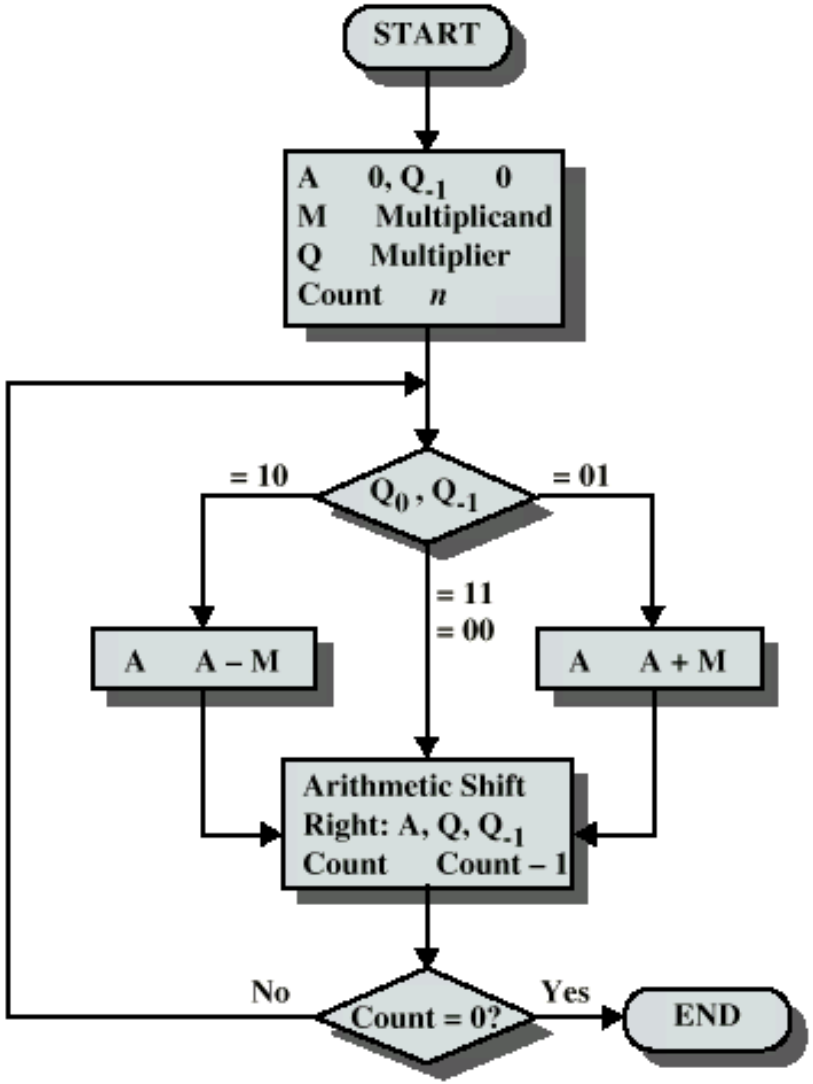

Example of Booth's Algorithm

A	Q	Q_{-1}	M		
0000	0011	0	0111	Initial Values	
1001	0011	0	0111	A A - M	First Cycle
1100	1001	1	0111	Shift	
1110	0100	1	0111	Shift	Second Cycle
0101	0100	1	0111	A A + M	Third Cycle
0010	1010	0	0111	Shift	
0001	0101	0	0111	Shift	Fourth Cycle

Division

- More complex than multiplication
- Negative numbers are really bad!
- Based on long division

Division of Unsigned Binary Integers

```
                 00001101        <-- Quotient
Divisor --> 1011 | 10010011      <-- Dividend
                  1011
                  ------
                  001110
                    1011
                    ------
                    001111
                      1011
                    ------
                       100       <-- Remainder
```

Partial Remainders

Real Numbers

- Numbers with fractions
- Could be done in pure binary
  - $1001.1010 = 2^4 + 2^0 + 2^{-1} + 2^{-3} = 9.625$
- Where is the binary point?
- Fixed?
  - Very limited
- Moving?
  - How do you show where it is?

Floating Point

Sign bit	Biased Exponent	Significand or Mantissa

- +/- .significand x $2^{exponent}$
- Misnomer
- Point is actually fixed between sign bit and body of mantissa
- Exponent indicates place value (point position)

Floating Point Examples

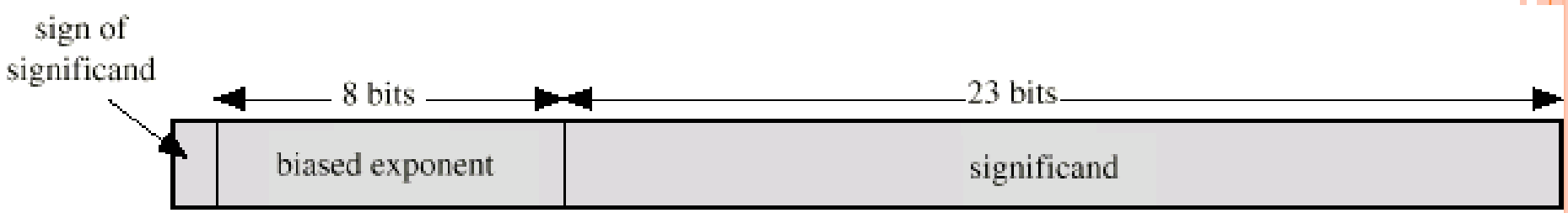

(a) Format

0.11010001	2^{10100}	=	0	10010011	10100010000000000000000
-0.11010001	2^{10100}	=	1	10010011	10100010000000000000000
0.11010001	2^{-10100}	=	0	01101011	10100010000000000000000
-0.11010001	2^{-10100}	=	1	01101011	10100010000000000000000

(b) Examples

Signs for Floating Point

- Mantissa is stored in 2s compliment
- Exponent is in excess or biased notation
  - e.g. Excess (bias) 128 means
  - 8 bit exponent field
  - Pure value range 0-255
  - Subtract 128 to get correct value
  - Range -128 to +127

Normalization

- FP numbers are usually normalized
- i.e. exponent is adjusted so that leading bit (MSB) of mantissa is 1
- Since it is always 1 there is no need to store it
- (c.f. Scientific notation where numbers are normalized to give a single digit before the decimal point
- e.g. 3.123×10^3)

FP Ranges

- For a 32 bit number
  - 8 bit exponent
  - +/- $2^{256} \approx 1.5 \times 10^{77}$
- Accuracy
  - The effect of changing lsb of mantissa
  - 23 bit mantissa $2^{-23} \approx 1.2 \times 10^{-7}$
  - About 6 decimal places

Expressible Numbers

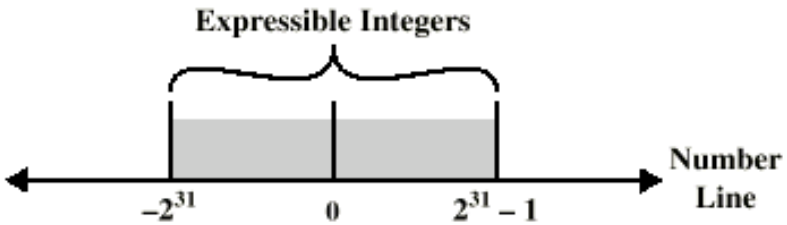

(a) Twos Complement Integers

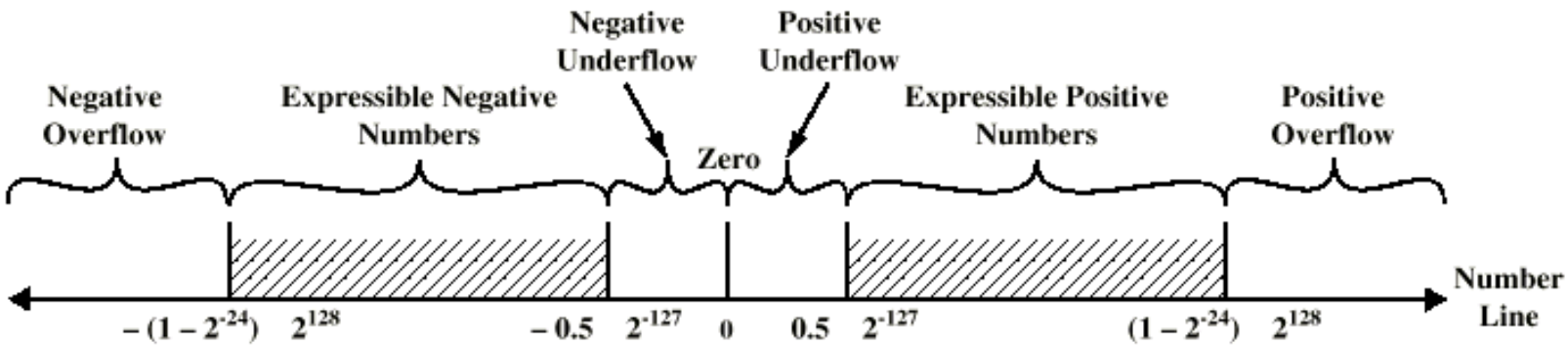

(b) Floating-Point Numbers

IEEE 754

- Standard for floating point storage
- 32 and 64 bit standards
- 8 and 11 bit exponent respectively
- Extended formats (both mantissa and exponent) for intermediate results

FP Arithmetic +/-

- Check for zeros
- Align significands (adjusting exponents)
- Add or subtract significands
- Normalize result

FP Arithmetic x/÷

- Check for zero
- Add/subtract exponents
- Multiply/divide significands (watch sign)
- Normalize
- Round
- All intermediate results should be in double length storage

Floating Point Multiplication

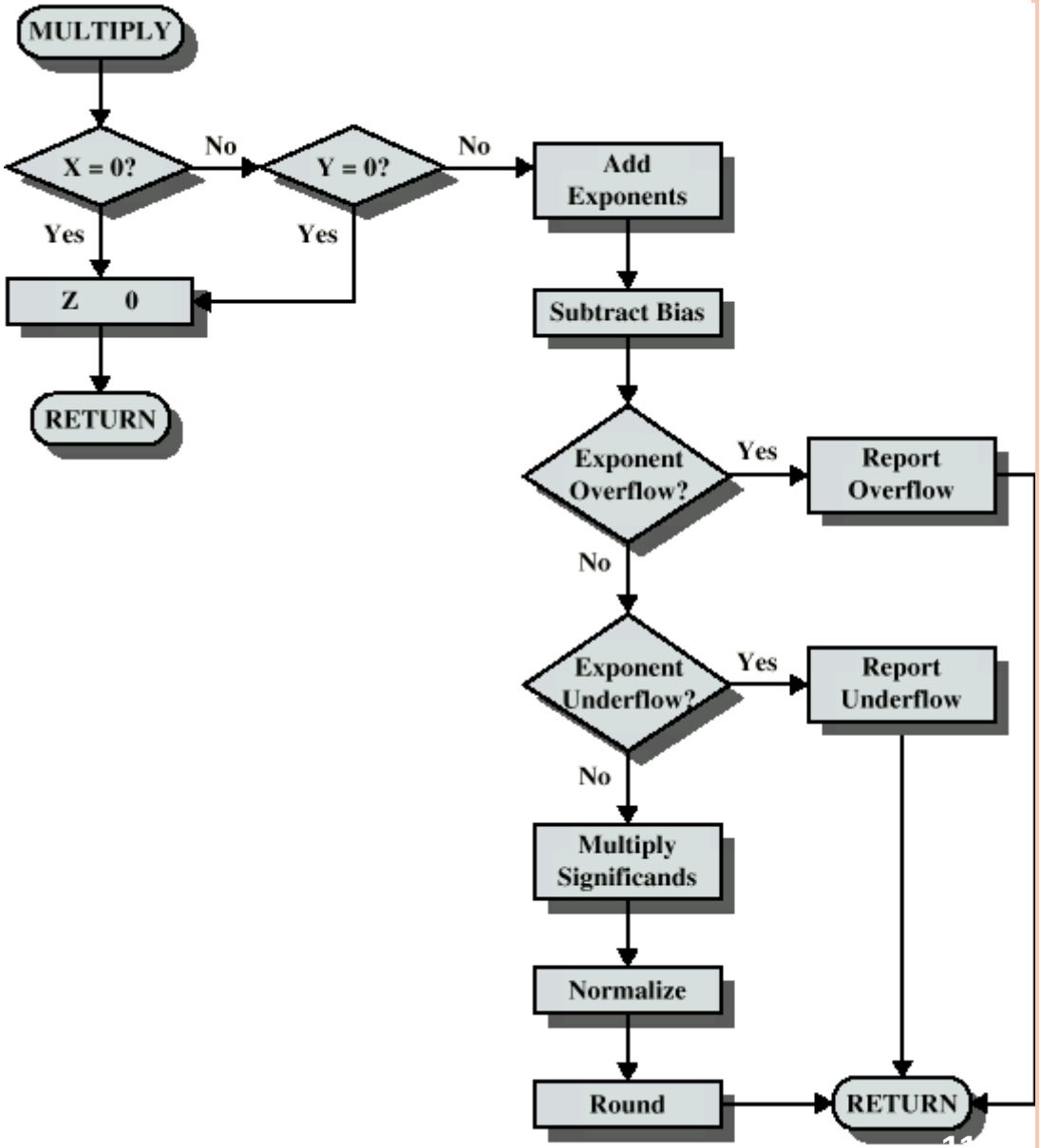

Floating Point Division

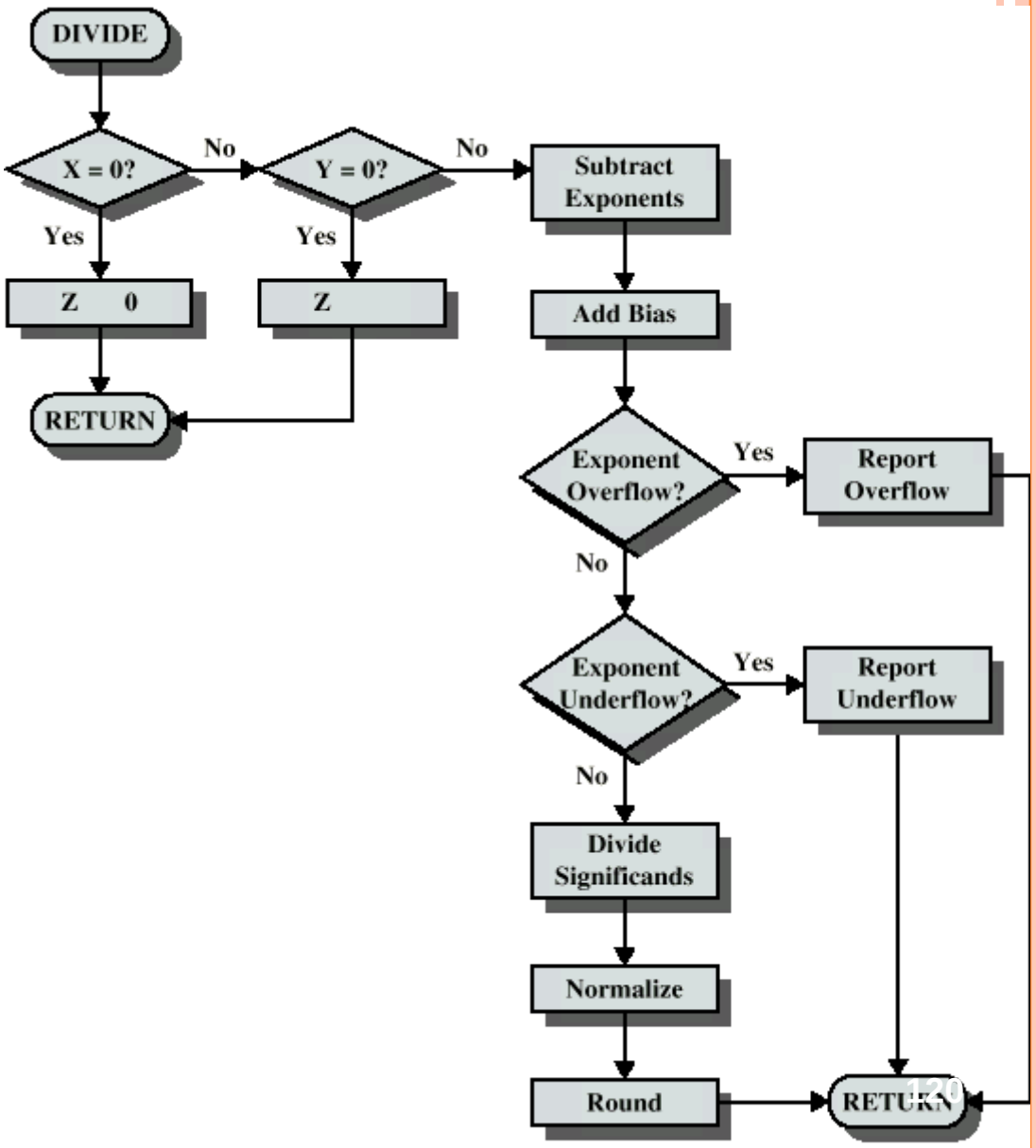

Instruction Sets: Addressing Modes and Formats

Addressing Modes

- Immediate
- Direct
- Indirect
- Register
- Register Indirect
- Displacement (Indexed)
- Stack

Direct Addressing Diagram

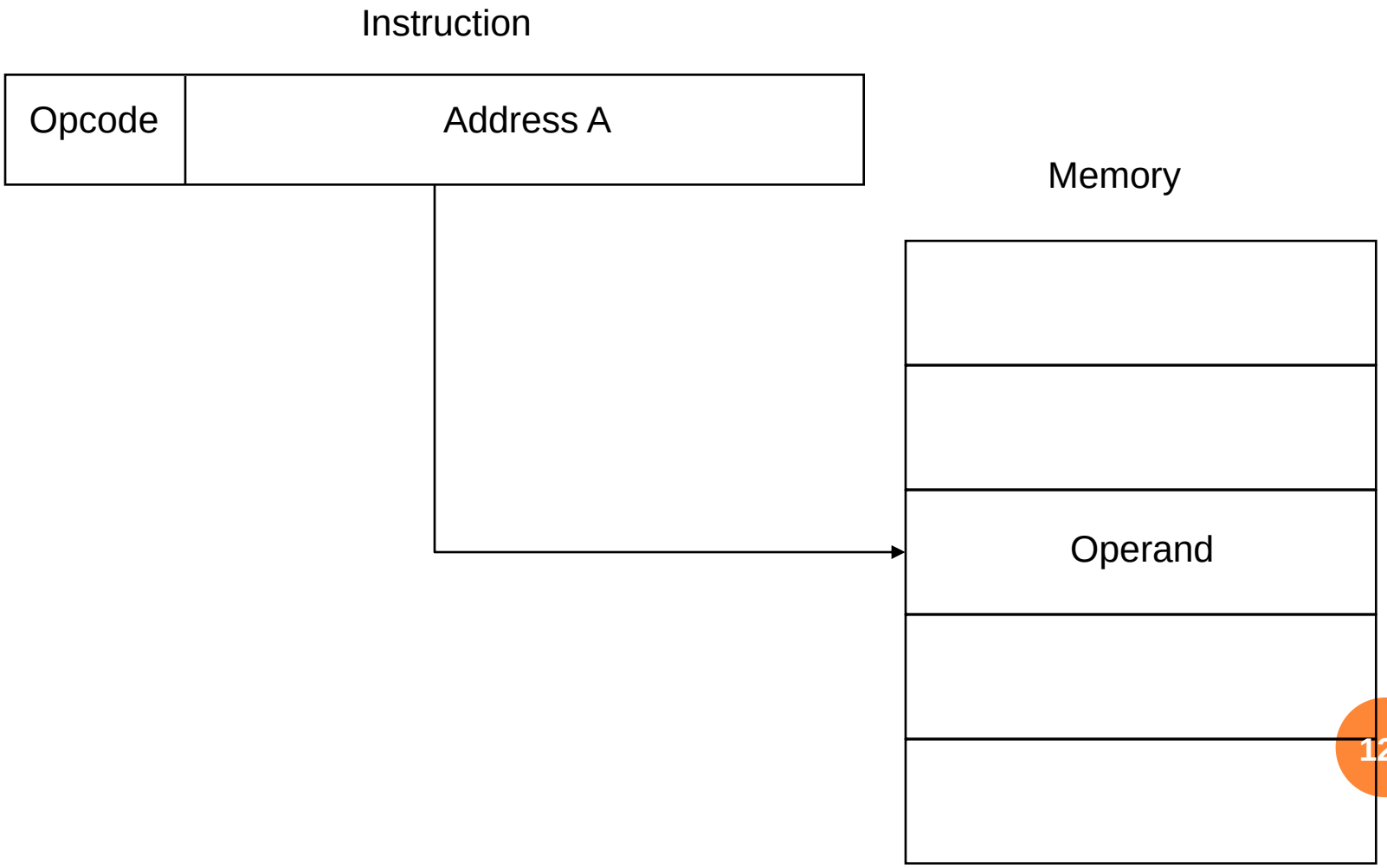

Indirect Addressing Diagram

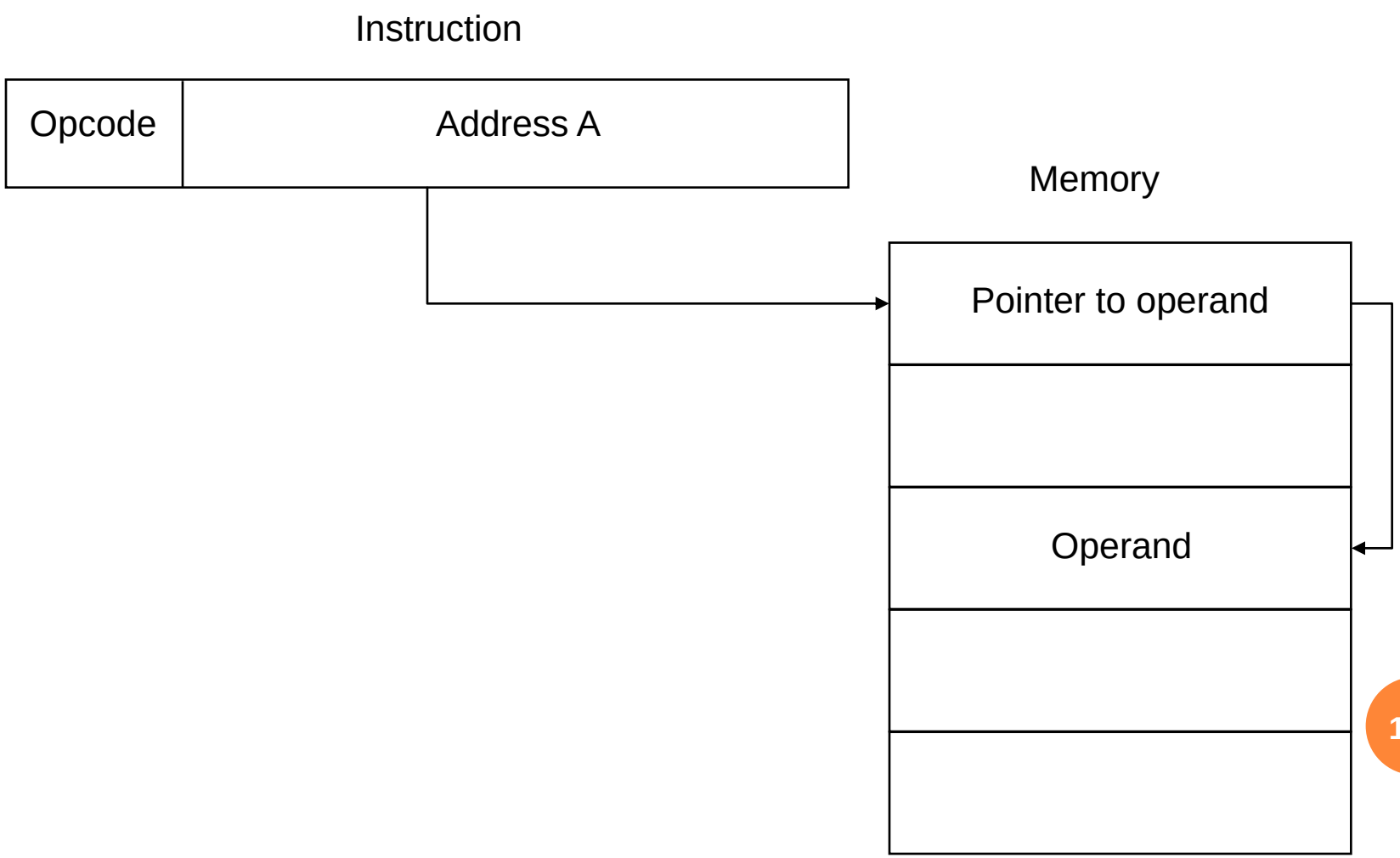

Register Addressing Diagram

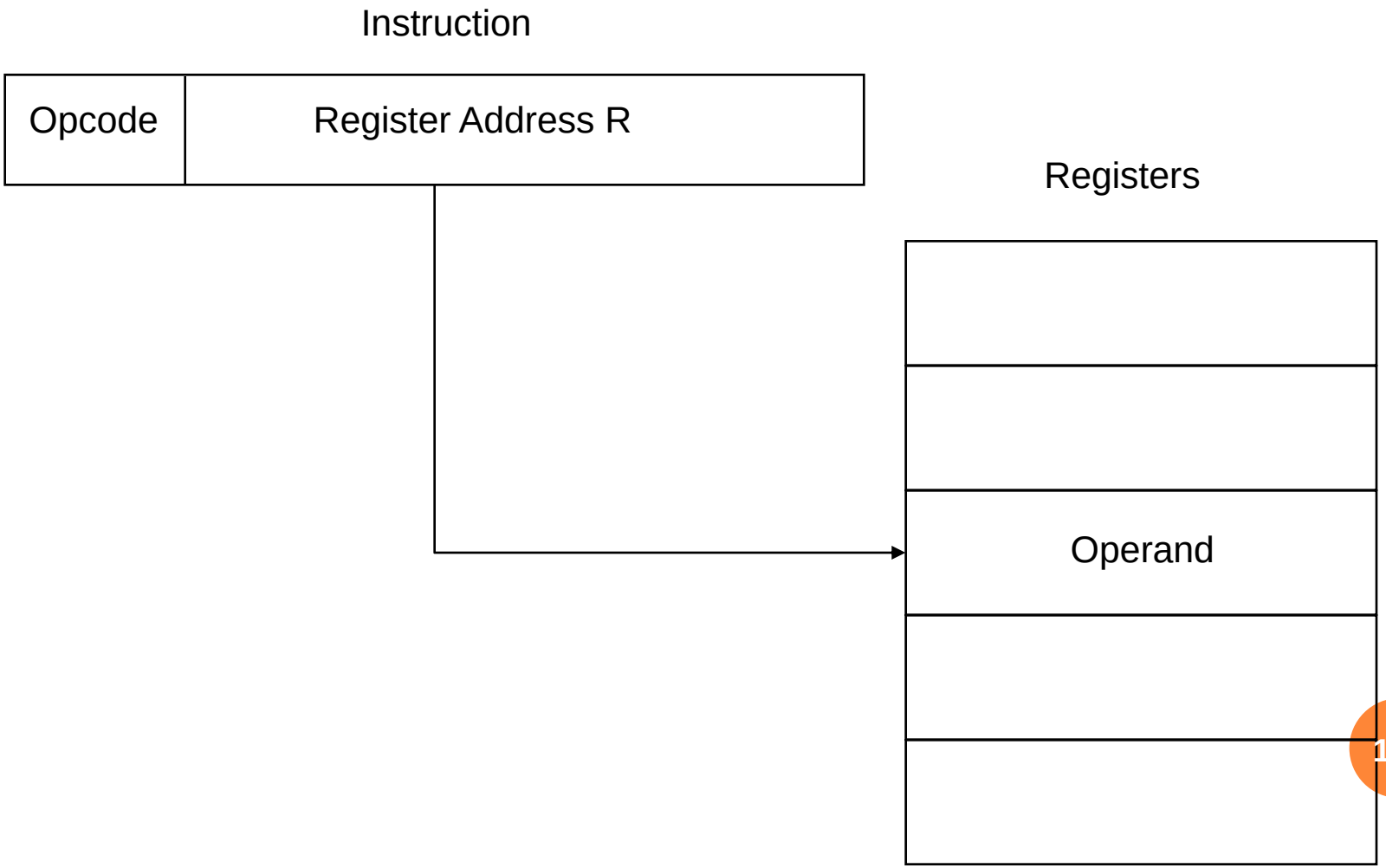

Register Indirect Addressing Diagram

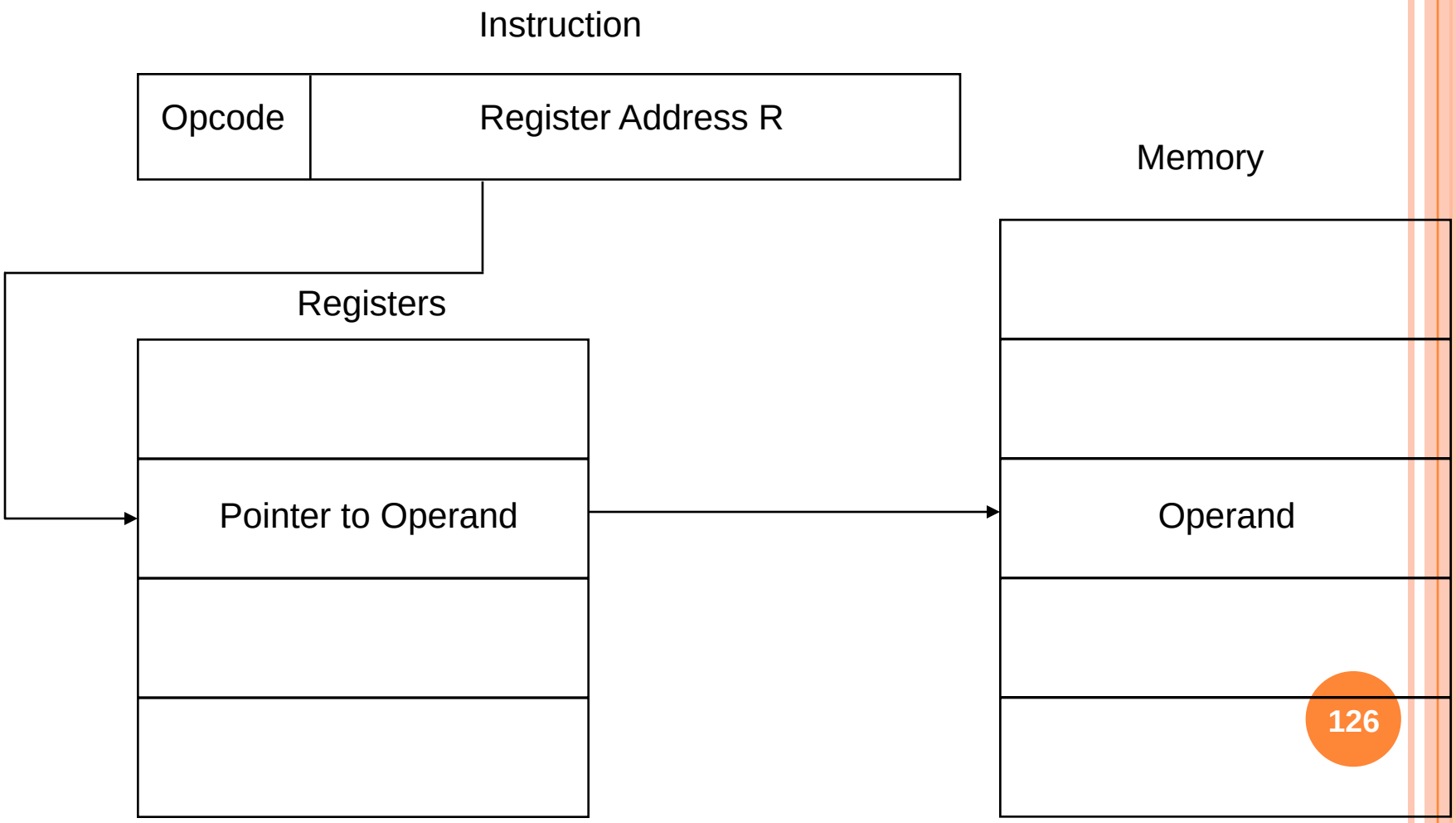

Displacement Addressing Diagram

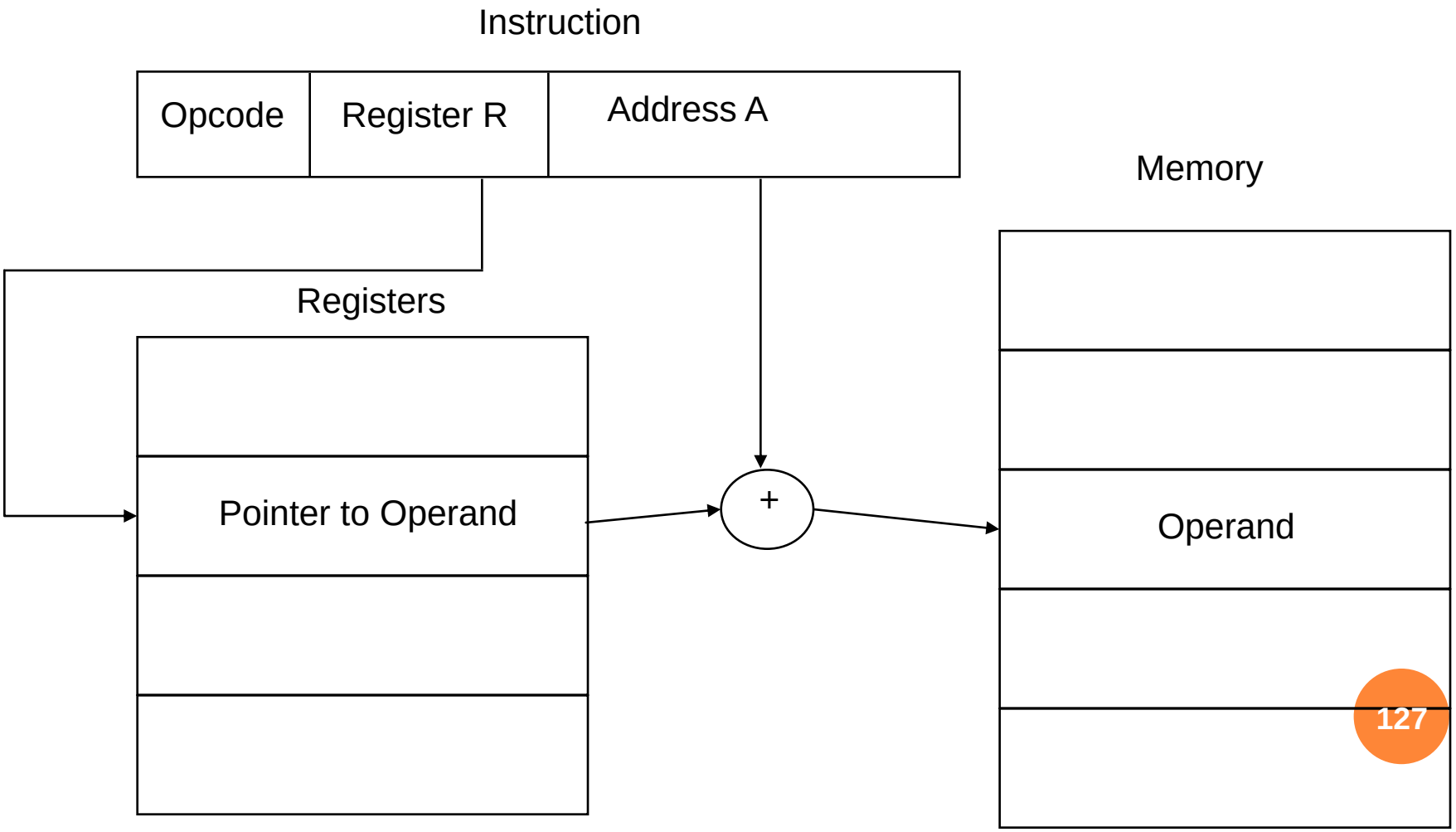

Base-Register Addressing

- A holds displacement
- R holds pointer to base address
- R may be explicit or implicit
- e.g. segment registers in 80x86

Indexed Addressing

- A = base
- R = displacement
- EA = A + R
- Good for accessing arrays
  - EA = A + R
  - R++

Combinations

- Postindex
- EA = (A) + (R)

- Preindex
- EA = (A+(R))

- (Draw the diagrams)

Stack Addressing

- Operand is (implicitly) on top of stack
- e.g.
  - ADD Pop top two items from stack and add

Instruction Formats

- Layout of bits in an instruction
- Includes opcode
- Includes (implicit or explicit) operand(s)
- Usually more than one instruction format in an instruction set

Instruction Length

- Affected by and affects:
  - Memory size
  - Memory organization
  - Bus structure
  - CPU complexity
  - CPU speed
- Trade off between powerful instruction repertoire and saving space

CPU Structure and Function

Prefetch

- Fetch accessing main memory
- Execution usually does not access main memory
- Can fetch next instruction during execution of current instruction
- Called instruction prefetch

Improved Performance

- But not doubled:
  - Fetch usually shorter than execution
    - Prefetch more than one instruction?
  - Any jump or branch means that prefetched instructions are not the required instructions
- Add more stages to improve performance

Pipelining

- Fetch instruction
- Decode instruction
- Calculate operands (i.e. EAs)
- Fetch operands
- Execute instructions
- Write result

- Overlap these operations

Timing of Pipeline

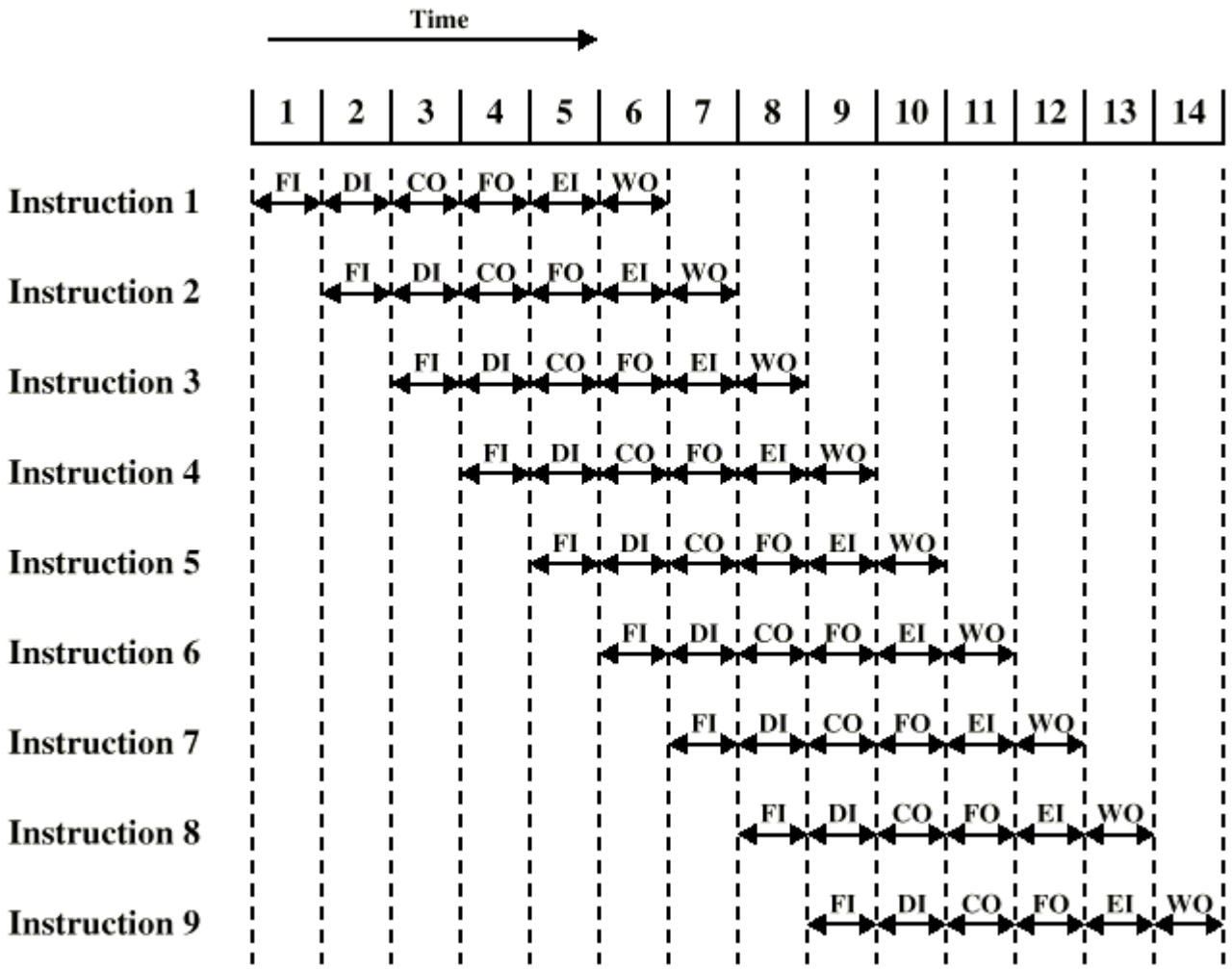

Branch in a Pipeline

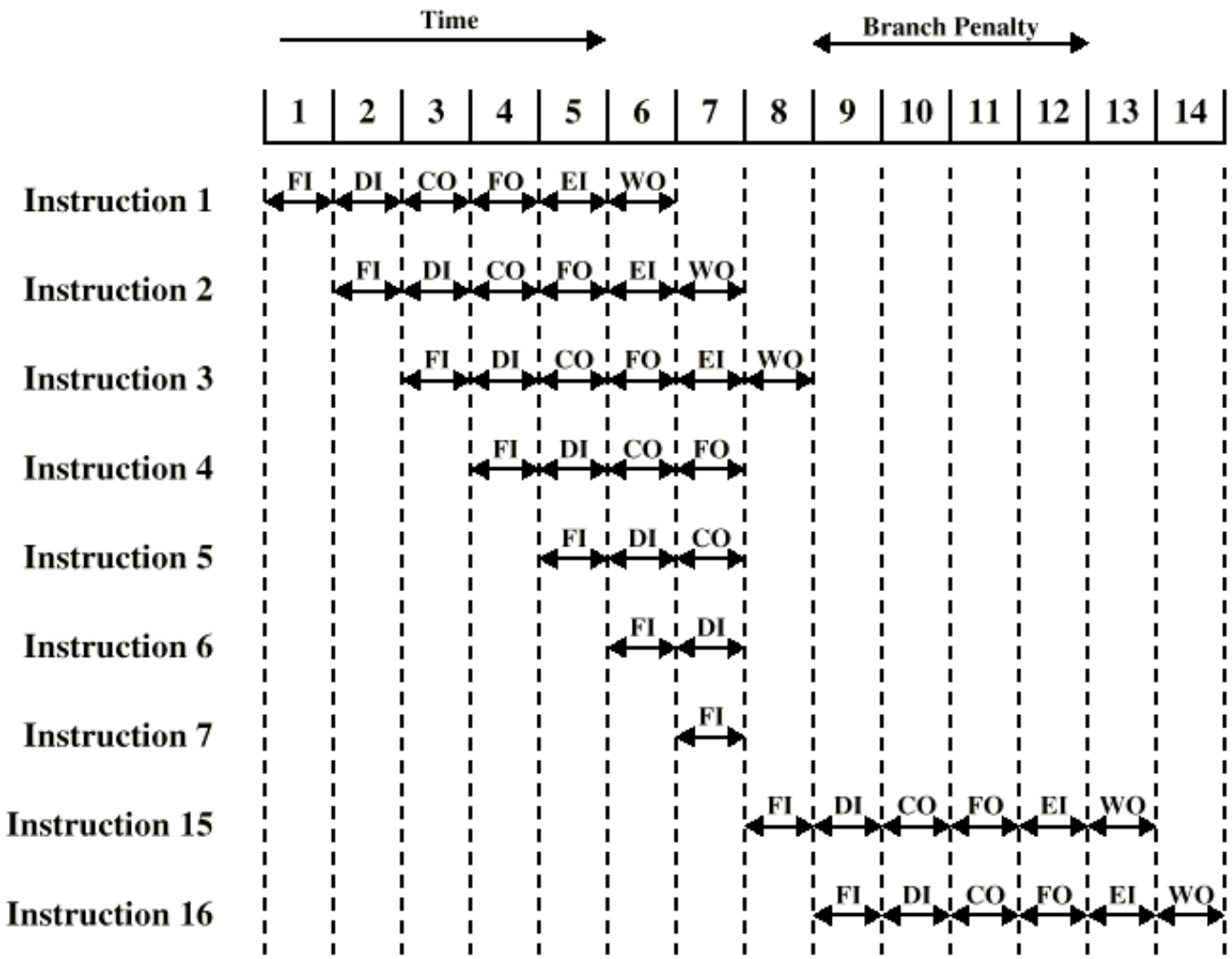

Dealing with Branches

- Multiple Streams
- Prefetch Branch Target
- Loop buffer
- Branch prediction
- Delayed branching

Multiple Streams

- Have two pipelines
- Prefetch each branch into a separate pipeline
- Use appropriate pipeline

- Leads to bus & register contention
- Multiple branches lead to further pipelines being needed

Prefetch Branch Target

- Target of branch is prefetched in addition to instructions following branch
- Keep target until branch is executed
- Used by IBM 360/91

Loop Buffer

- Very fast memory
- Maintained by fetch stage of pipeline
- Check buffer before fetching from memory
- Very good for small loops or jumps
- c.f. cache
- Used by CRAY-1

Branch Prediction (1)

- Predict never taken
  - Assume that jump will not happen
  - Always fetch next instruction
  - 68020 & VAX 11/780
  - VAX will not prefetch after branch if a page fault would result (O/S v CPU design)
- Predict always taken
  - Assume that jump will happen
  - Always fetch target instruction

Branch Prediction (2)

- Predict by Opcode
  - Some instructions are more likely to result in a jump than thers
  - Can get up to 75% success
- Taken/Not taken switch
  - Based on previous history
  - Good for loops

Branch Prediction (3)

- Delayed Branch
  - Do not take jump until you have to
  - Rearrange instructions

Branch Prediction State Diagram

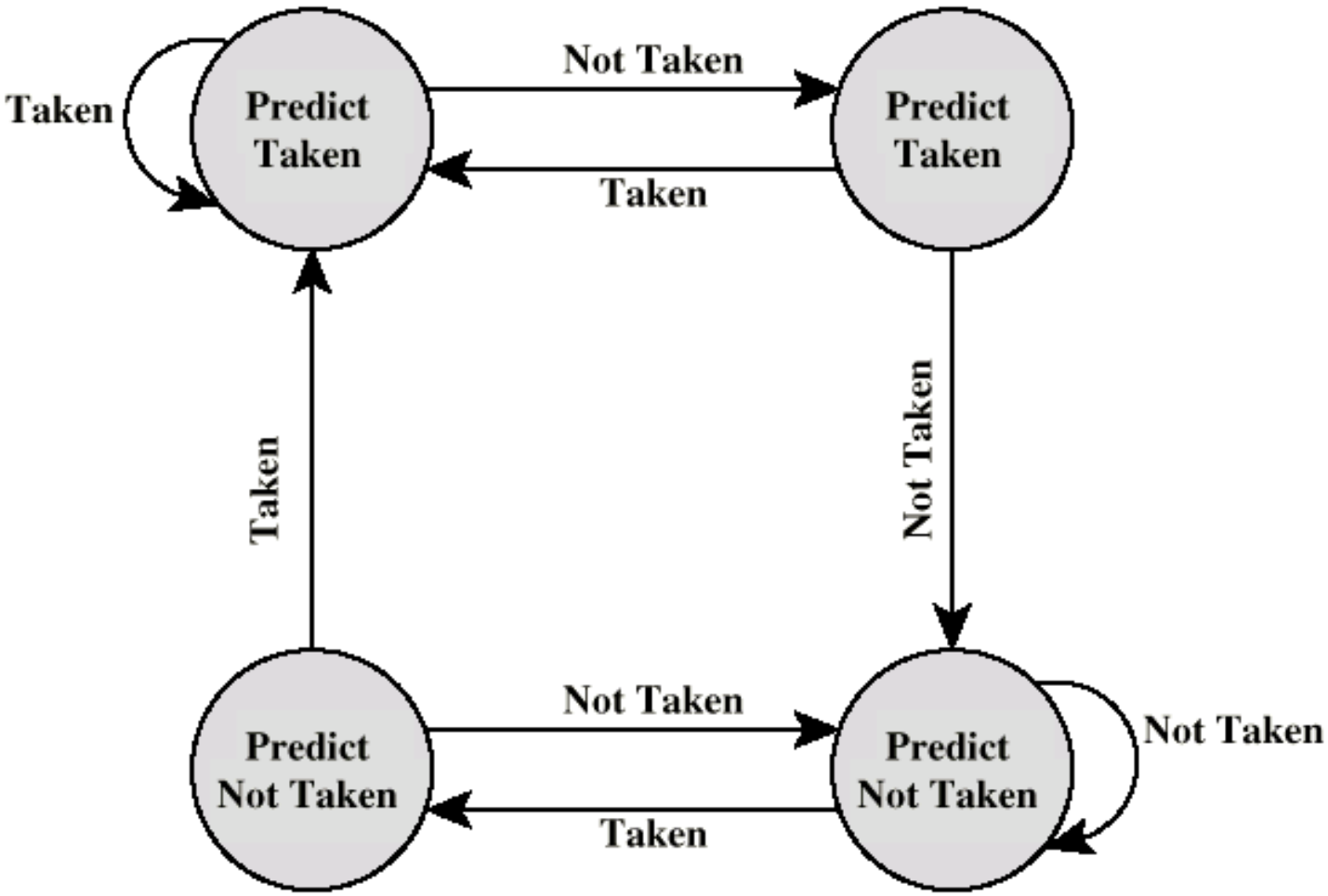

RISC vs. CISC

RISC

- Reduced Instruction Set Computer

- Key features
  - Large number of general purpose registers
    or use of compiler technology to optimize register use
  - Limited and simple instruction set
  - Emphasis on optimising the instruction pipeline

Driving force for CISC

- Software costs far exceed hardware costs
- Increasingly complex high level languages
- Semantic gap
- Leads to:
  - Large instruction sets
  - More addressing modes
  - Hardware implementations of HLL statements
    - e.g. CASE (switch) on VAX

Intention of CISC

- Ease compiler writing
- Improve execution efficiency
  - Complex operations in microcode
- Support more complex HLLs

Execution Characteristics

- Operations performed
- Operands used
- Execution sequencing
- Studies have been done based on programs written in HLLs
- Dynamic studies are measured during the execution of the program

Operations

- Assignments
  - Movement of data
- Conditional statements (IF, LOOP)
  - Sequence control
- Procedure call-return is very time consuming
- Some HLL instruction lead to many machine code operations

Implications

- Best support is given by optimising most used and most time consuming features
- Large number of registers
  - Operand referencing
- Careful design of pipelines
  - Branch prediction etc.
- Simplified (reduced) instruction set

Why CISC (1)?

- Compiler simplification?
  - Disputed…
  - Complex machine instructions harder to exploit
  - Optimization more difficult
- Smaller programs?
  - Program takes up less memory but…
  - Memory is now cheap
  - May not occupy less bits, just look shorter in symbolic form
    - More instructions require longer op-codes
    - Register references require fewer bits

Why CISC (2)?

- Faster programs?
  - Bias towards use of simpler instructions
  - More complex control unit
  - Microprogram control store larger
  - thus simple instructions take longer to execute

- It is far from clear that CISC is the appropriate solution

RISC Characteristics

- One instruction per cycle
- Register to register operations
- Few, simple addressing modes
- Few, simple instruction formats
- Hardwired design (no microcode)
- Fixed instruction format
- More compile time/effort

RISC v CISC

- Not clear cut
- Many designs borrow from both philosophies
- e.g. PowerPC and Pentium II

RISC Pipelining

- Most instructions are register to register
- Two phases of execution
  - I: Instruction fetch
  - E: Execute
    - ALU operation with register input and output
- For load and store
  - I: Instruction fetch
  - E: Execute
    - Calculate memory address
  - D: Memory
    - Register to memory or memory to register operation

Controversy

- Quantitative
  - compare program sizes and execution speeds
- Qualitative
  - examine issues of high level language support and use of VLSI real estate
- Problems
  - No pair of RISC and CISC that are directly comparable
  - No definitive set of test programs
  - Difficult to separate hardware effects from complier effects
  - Most comparisons done on “toy” rather than production machines
  - Most commercial devices are a mixture

Instruction Level Parallelism and Superscalar Processors

What is Superscalar?

- Common instructions (arithmetic, load/store, conditional branch) can be initiated and executed independently
- Equally applicable to RISC & CISC
- In practice usually RISC

- A superscalar processor executes more than one instruction during a clock cycle by simultaneously dispatching multiple instructions to redundant functional units on the processor.
- Each functional unit is not a separate CPU core but an execution resource within a single CPU such as an arithmetic logic unit, a bit shifter, or a multiplier.

Superpipelined

- Many pipeline stages need less than half a clock cycle
- Double internal clock speed gets two tasks per external clock cycle
- Superscalar allows parallel fetch execute

Superscalar vs. Superpipeline

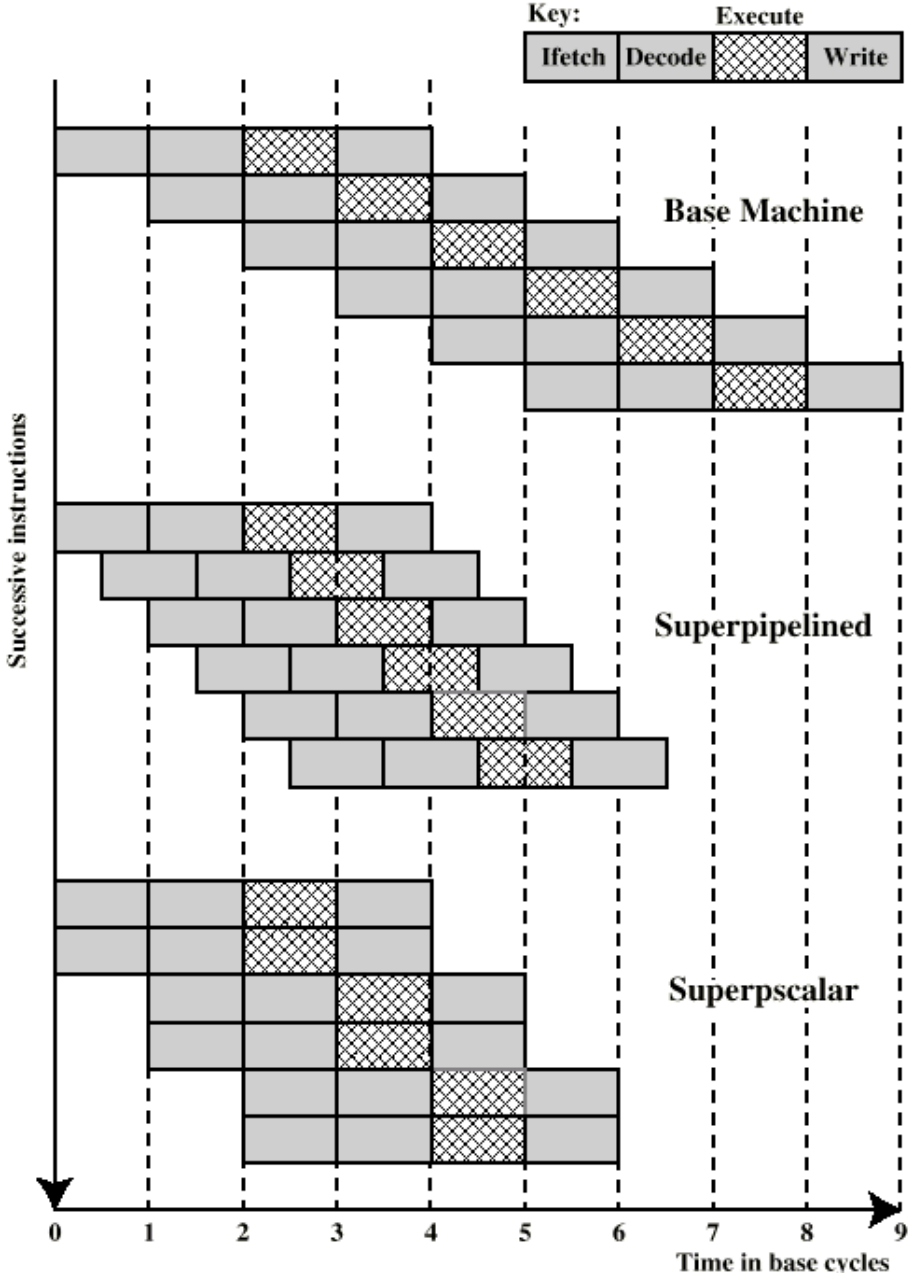

Limitations

- Instruction level parallelism
- Compiler based optimisation
- Hardware techniques
- Limited by
  - True data dependency
  - Procedural dependency
  - Resource conflicts
  - Output dependency
  - Antidependency

True Data Dependency

- ADD r1, r2 (r1 := r1+r2;)
- MOVE r3,r1 (r3 := r1;)
- Can fetch and decode second instruction in parallel with first
- Can NOT execute second instruction until first is finished

Procedural Dependency

- Can not execute instructions after a branch in parallel with instructions before a branch
- Also, if instruction length is not fixed, instructions have to be decoded to find out how many fetches are needed
- This prevents simultaneous fetches

Resource Conflict

- Two or more instructions requiring access to the same resource at the same time
  - e.g. two arithmetic instructions
- Can duplicate resources
  - e.g. have two arithmetic units

Dependencies

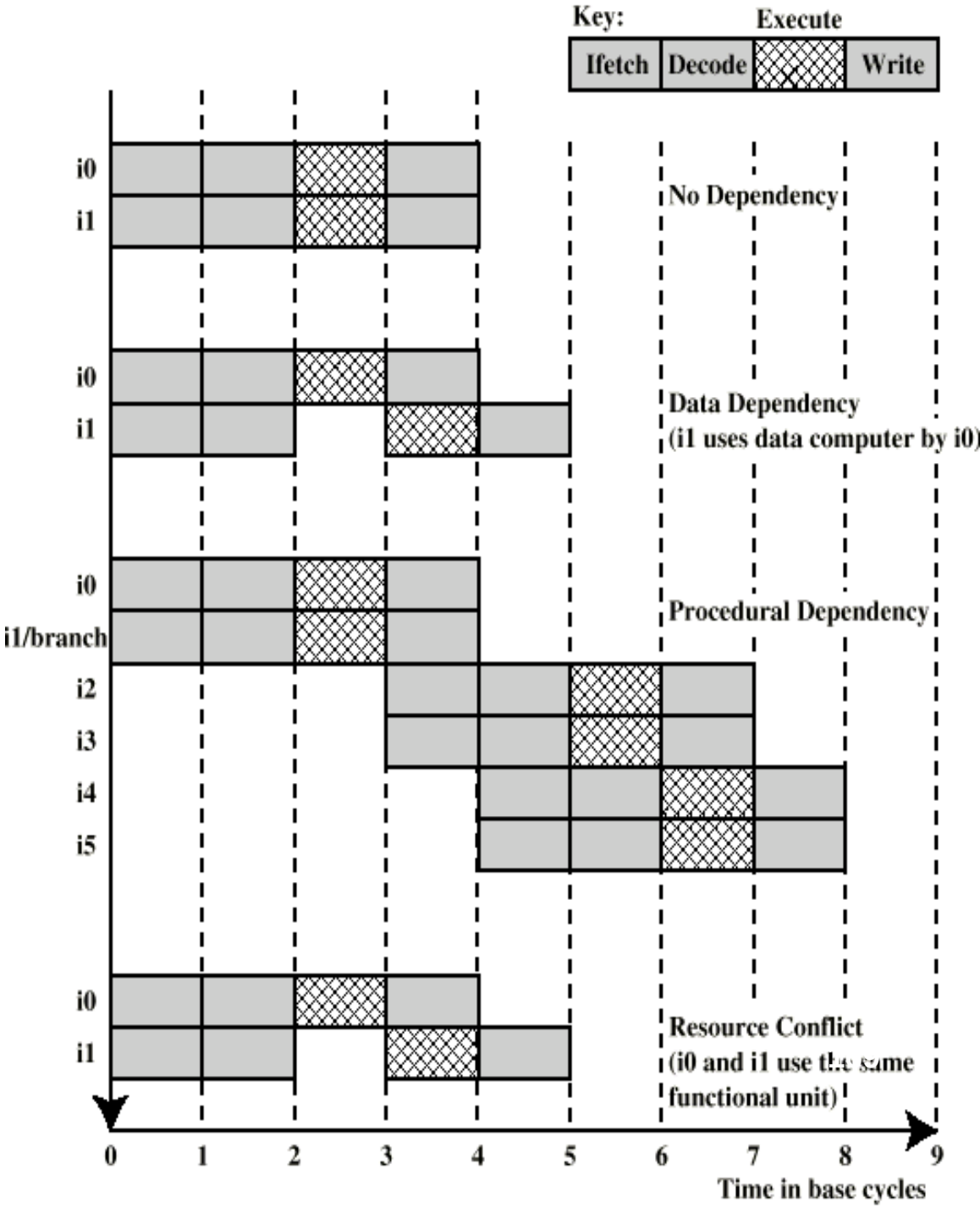

Design Issues

- Instruction level parallelism
  - Instructions in a sequence are independent
  - Execution can be overlapped
  - Governed by data and procedural dependency
- Machine Parallelism
  - Ability to take advantage of instruction level parallelism
  - Governed by number of parallel pipelines

Machine Parallelism

- Duplication of Resources
- Out of order issue
- Renaming
- Not worth duplication functions without register renaming
- Need instruction window large enough (more than 8)

Superscalar Execution

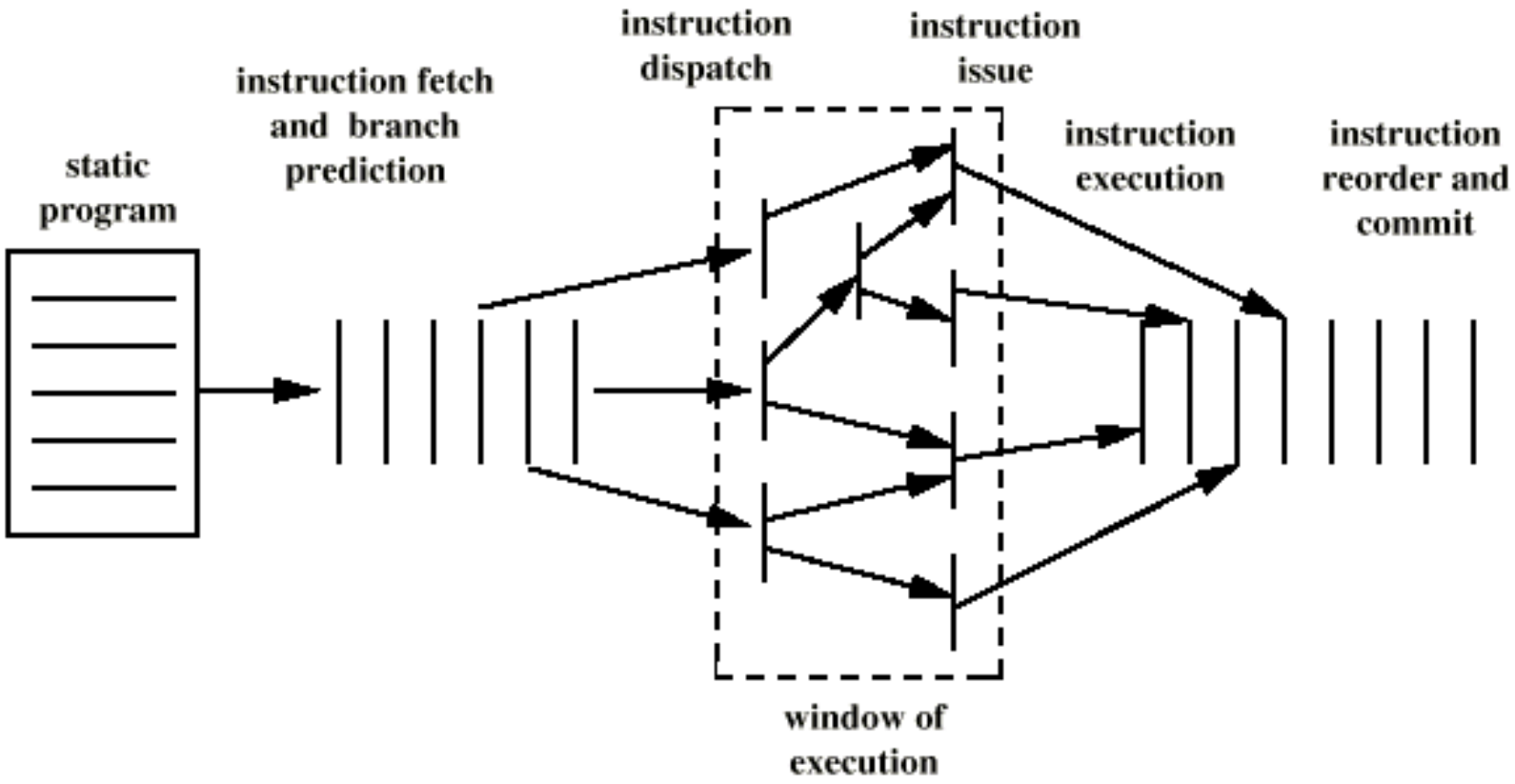

Superscalar Implementation

- Simultaneously fetch multiple instructions
- Logic to determine true dependencies involving register values
- Mechanisms to communicate these values
- Mechanisms to initiate multiple instructions in parallel
- Resources for parallel execution of multiple instructions
- Mechanisms for committing process state in correct order

Snooping Protocol

- *Snooping*—Every cache that has a copy of the data from a block of physical memory also has a copy of the sharing status of the block, but no centralized state is kept. The caches are all accessible via some broadcast medium (a bus or switch), and all cache controllers monitor or *snoop* on the medium to determine whether or not they have a copy of a block that is requested on a bus or switch access. We focus on this approach in this section.

Snooping protocols became popular with multiprocessors using microprocessors and caches attached to a single shared memory because these protocols can use a preexisting physical connection—the bus to memory—to interrogate the status of the caches. In the following section we explain snoop-based cache coherence as implemented with a shared bus, but any communication medium that broadcasts cache misses to all processors can be used to implement a snooping-based coherence scheme. This broadcasting to all caches is what makes snooping protocols simple to implement but also limits their scalability.

Snooping Protocols

There are two ways to maintain the coherence requirement described in the prior subsection. One method is to ensure that a processor has exclusive access to a data item before it writes that item. This style of protocol is called a *write invalidate protocol* because it invalidates other copies on a write. It is by far the most common protocol, both for snooping and for directory schemes. Exclusive access ensures that no other readable or writable copies of an item exist when the write occurs: All other cached copies of the item are invalidated.

Figure 4.4 shows an example of an invalidation protocol for a snooping bus with write-back caches in action. To see how this protocol ensures coherence, consider a write followed by a read by another processor: Since the write requires exclusive access, any copy held by the reading processor must be invalidated (hence the protocol name). Thus, when the read occurs, it misses in the cache and is forced to fetch a new copy of the data. For a write, we require that the writing processor have exclusive access, preventing any other processor from being able

Processor activity	Bus activity	Contents of CPU A's cache	Contents of CPU B's cache	Contents of memory location X
				0
CPU A reads X	Cache miss for X	0		0
CPU B reads X	Cache miss for X	0	0	0
CPU A writes a 1 to X	Invalidation for X	1		0
CPU B reads X	Cache miss for X	1	1	1

Figure 4.4 An example of an invalidation protocol working on a snooping bus for a single cache block (X) with write-back caches. We assume that neither cache initially holds X and that the value of X in memory is 0. The CPU and memory contents show the value after the processor and bus activity have both completed. A blank indicates no activity or no copy cached. When the second miss by B occurs, CPU A responds with the value canceling the response from memory. In addition, both the contents of B's cache and the memory contents of X are updated. This update of memory, which occurs when a block becomes shared, simplifies the protocol, but it is possible to track the ownership and force the write back only if the block is replaced. This requires the introduction of an additional state called "owner," which indicates that a block may be shared, but the owning processor is responsible for updating any other processors and memory when it changes the block or replaces it.

to write simultaneously. If two processors do attempt to write the same data simultaneously, one of them wins the race (we'll see how we decide who wins shortly), causing the other processor's copy to be invalidated. For the other processor to complete its write, it must obtain a new copy of the data, which must now contain the updated value. Therefore, this protocol enforces write serialization.

The alternative to an invalidate protocol is to update all the cached copies of a data item when that item is written. This type of protocol is called a *write update* or *write broadcast* protocol. Because a write update protocol must broadcast all writes to shared cache lines, it consumes considerably more bandwidth. For this reason, all recent multiprocessors have opted to implement a write invalidate protocol, and we will focus only on invalidate protocols for the rest of the chapter.

Reading Materials

- Slides of William Stalling (This presentation was made from there)
- Books:
  - William Stalling
  - Patterson_Hennessy
  - Rafiquizzman
  - Computer Organization and Design - The Hardware-Software Interface