Master Class on "Embedded C " Programming

DAY 28/30

mk

What you will learn Today

IIC WITH STM32F411RE

About Pantech Prolabs India Pvt Ltd

- ✓ Started in the Year 2004
- ✓ Lab equipments and Sensor Interface
- ✓ Manufacturer of Brainsense EEG Headset
- ✓ Reconfigurable Algorithms on AI
- ✓ Manufacture of AI development Boards
- ✓ Power electronics, Fuel cell and Renewable Energy trainers

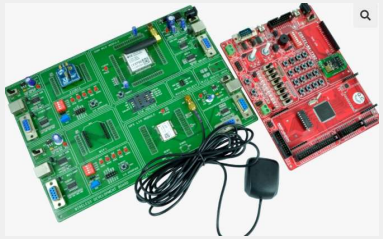

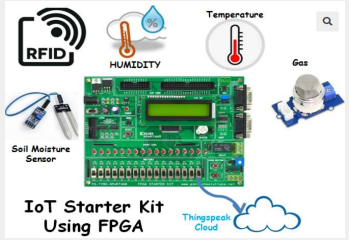

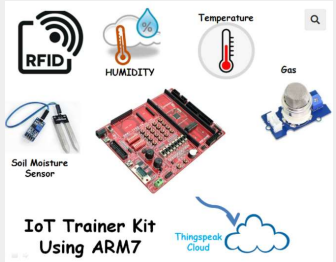

Vision

To help 10 Million students around the globe to learn technology in a easy way

www.pantechsolutions.net

About me

My Primary Expertise

Microcontroller Architecture: 8051,PIC,AVR,ARM,MSP430,PSOC3
DSP Architecture: Blackfin,C2000,C6000,21065L Sharc
FPGA: Spartan,Virtex,Cyclone
Image Processing Algorithms: Image/Scene Recognition, Machine Learning, Computer Vision, Deep Learning, Pattern Recognition, Object Classification ,Image Retrieval, Image enhancement and denoising.
Neural Networks : SVM,RBF,BPN
Cryptography :RSA,DES,3DES,Ellipti curve,Blowfish,Diffe Hellman
Compilers: Keil,Visual DSP++,CCS, Xilinx Platform studio,ISE, Matlab, Open CV

https://www.linkedin.com/in/jeevarajan/

www.pantechsolutions.net

Announcement

- ✓ **Attendance Link at anytime of the session.**
- ✓ **Minimum attendance required for an E-Certificate is 25 Days. Attendance link will be closed at the end of the event.**
- ✓ **For Internship Candidates no attendance required ,it will be accessed from the LMS Portal. (learn.pantechsolutions.net)**
- ✓ **Recorded Video Streaming for LAB classes to improve Learning Experience or if I am not able to present on Live.**
- ✓ **PPT in facebook group and Telegram Group**
- ✓ **Source code and projects available download only for Internship canditates**

Mindset Lesson

Knowing and not doing is not knowing

Ideas are worthless unless you act on it.

Are you Ready to learn?

What is IIC

I^2C requires a mere two wires, like asynchronous serial, but those two wires can support up to 1008 peripheral devices. Also, unlike SPI, I^2C can support a multi-controller system, allowing more than one controller to communicate with all peripheral devices on the bus (although the controller devices can't talk to each other over the bus and must take turns using the bus lines).

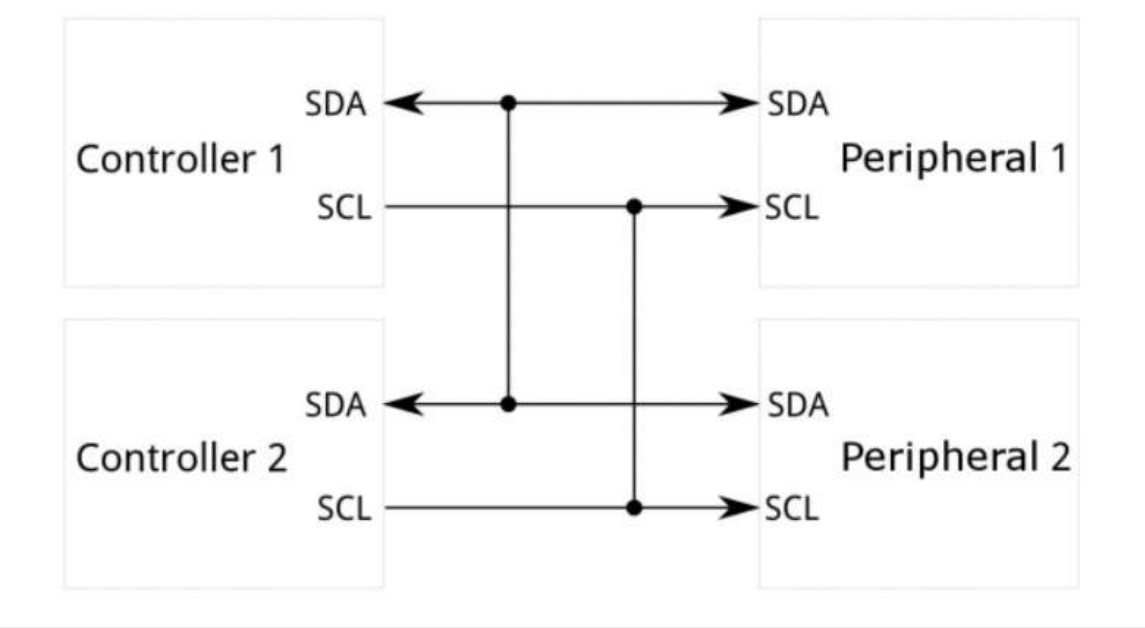

Why Use I2C?

Disadvantage of Serial Port(UART)

- serial ports are asynchronous (no clock data is transmitted), devices using them must agree ahead of time on a data rate. The two devices must also have clocks that are close to the same rate

- Another core fault in asynchronous serial ports is that they are inherently suited to communications between two, and only two, devices. While it is possible to connect multiple devices to a single serial port, bus contention (where two devices attempt to drive the same line at the same time)

Disadvantage of SPI

- The most obvious drawback of SPI is the number of pins required. Connecting a single controller [1] to a single peripheral [1] with an SPI bus requires four lines; each additional peripheral device requires one additional chip select I/O pin on the controller.
- SPI only allows one controller on the bus,

I2C is Open Drain

- UART or SPI connections, the I2C bus drivers are "open drain", meaning that they can pull the corresponding signal line low, but cannot drive it high. Thus, there can be no bus contention where one device is trying to drive the line high while another tries to pull it low, eliminating the potential for damage to the drivers or excessive power dissipation in the system. Each signal line has a pull-up resistor on it, to restore the signal to high when no device is asserting it low.

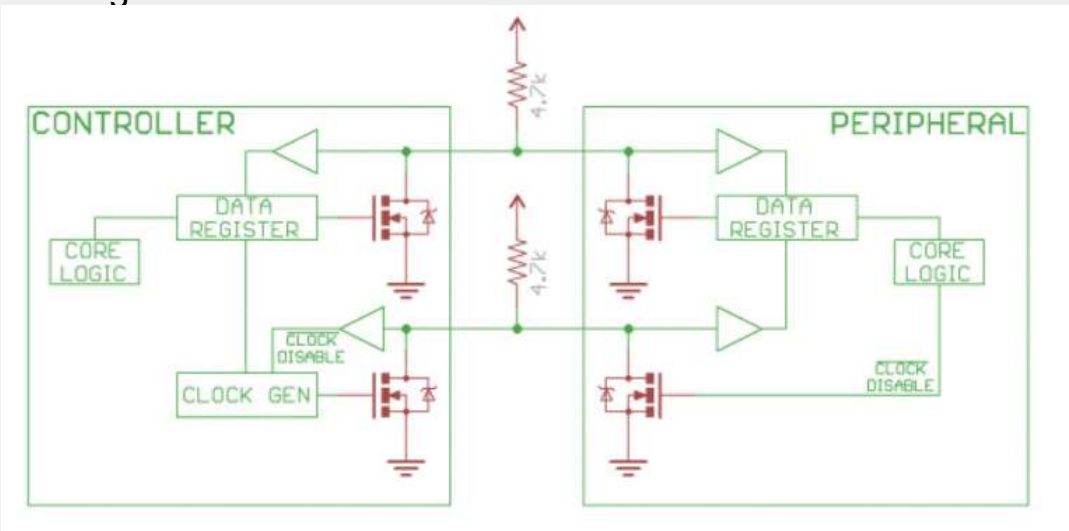

Features of I2C

- Half-duplex Communication Protocol
  Bi-directional communication is possible but not simultaneously.
- Synchronous Communication – The data is transferred in the form of frames or blocks.
  Can be configured in a multi-master configuration.
- **Arbitration** –
  I2C protocol supports multi-master bus system but more than one bus can not be used simultaneously. The SDA and SCL are monitored by the masters. If the SDA is found high when it was supposed to be low it will be inferred that another master is active and hence it stops the transfer of data.
- **Serial transmission**
  I2C uses serial transmission for transmission of data.
  Used for low-speed communication.

- **Clock Stretching**
  The clock is stretched when the slave device is not ready to accept more data by holding the SCL line low, hence disabling the master to raise the clock line. Master will not be able to raise the clock line because the wires are AND wired and wait until the slave releases the SCL line to show it is ready to transfer next bit.

Start

- **Start Condition:** The SDA line switches from a high voltage level to a low voltage
  n high to low.

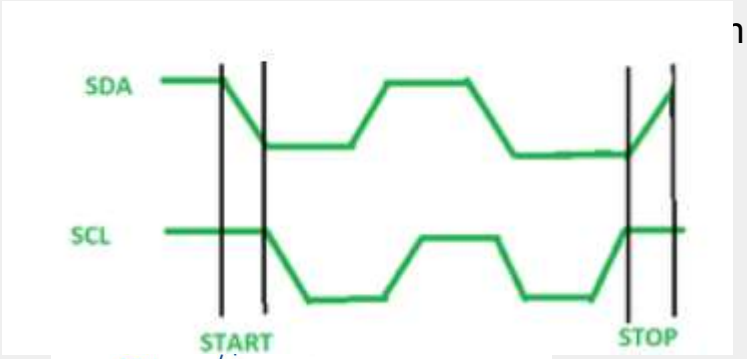

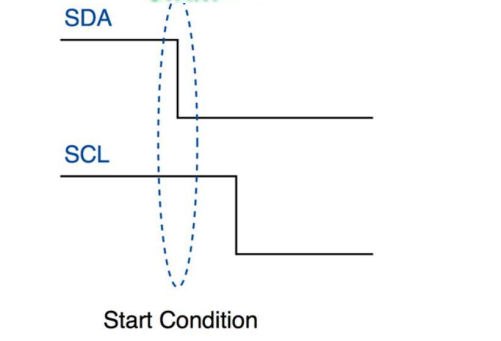

Stop

After required data blocks are transferred through the SDA line, the master device switches the SDA line from low voltage level to high voltage level before the SCL line switches from high to low.

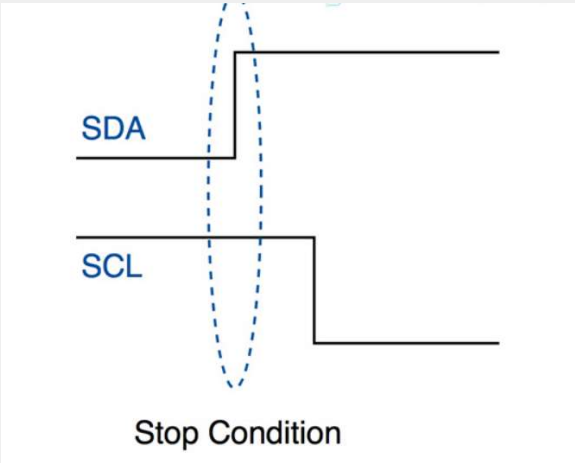

I2C – How it works

- The master device sends the start condition
- The master device sends the 7 address bits which corresponds to the slave device to be targeted
- The master device sets the Read/Write bit to ‘0’, which signifies a write
- Now two scenarios are possible:
  - If no slave device matches with the address sent by the master device, the next ACK/NACK bit stays at ‘1’ (default). This signals the master device that the slave device identification is unsuccessful. The master clock will end the current transaction by sending a Stop condition or a new Start condition
  - If a slave device exists with the same address as the one specified by the master device, the slave device sets the ACK/NACK bit to ‘0’, which signals the master device that a slave device is successfully targeted
- If a slave device is successfully targeted, the master device now sends 8 bits of data which is only considered and received by the targeted slave device. This data means nothing to the remaining slave devices
- If the data is successfully received by the slave device, it sets the ACK/NACK bit to ‘0’, which signals the master device to continue
- The previous two steps are repeated until all the data is transferred
- After all the data is sent to the slave device, the master device sends the Stop condition which signals all the slave devices that the current transaction has ended

I2C – How it works

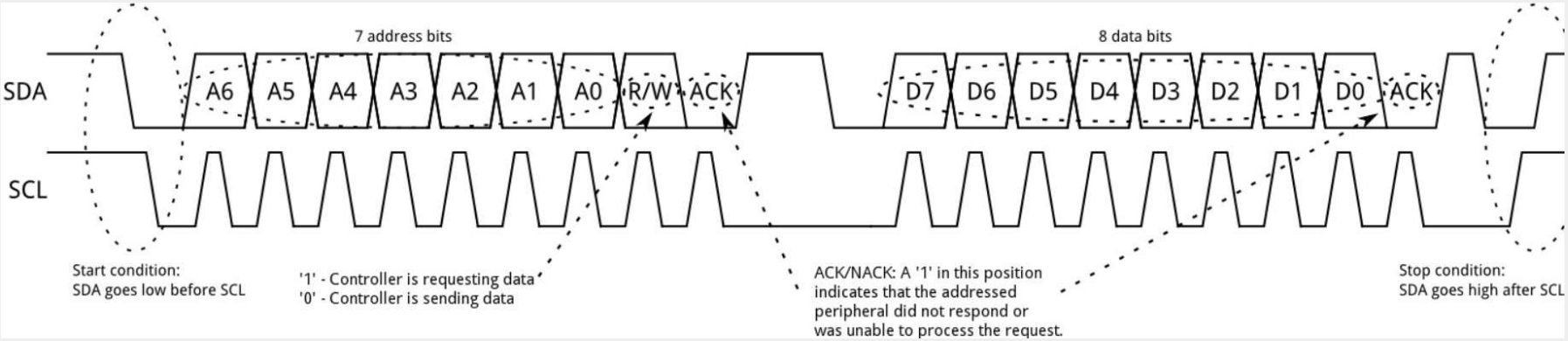

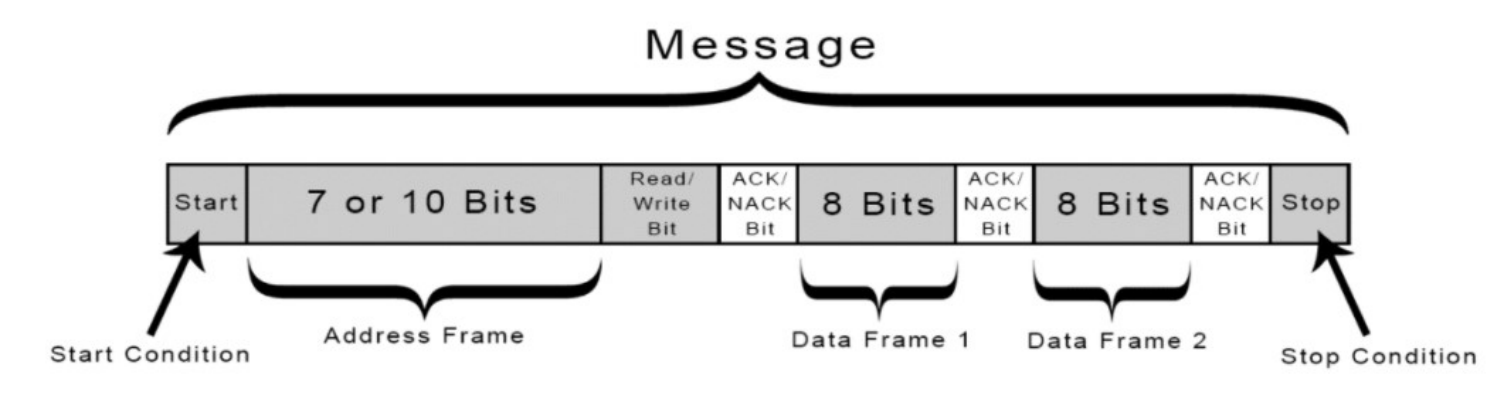

Sending Data to a Slave Device

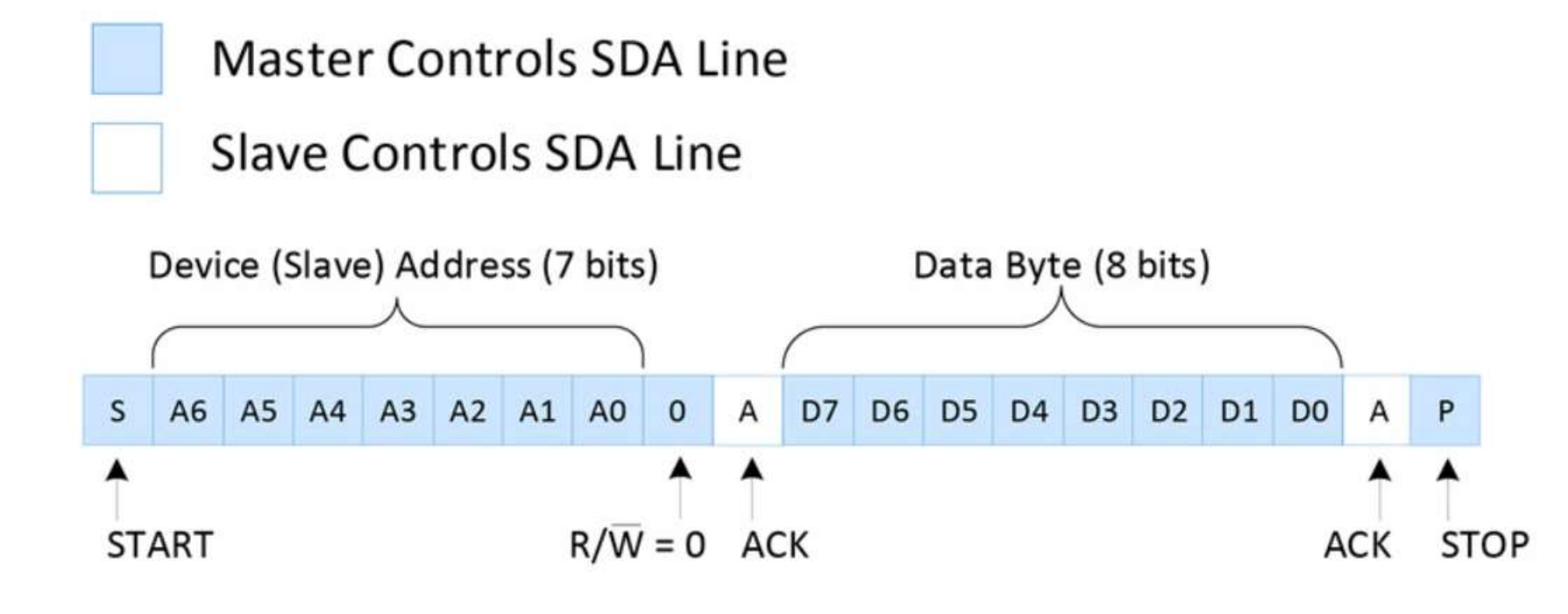

Reading Data from a Slave Device

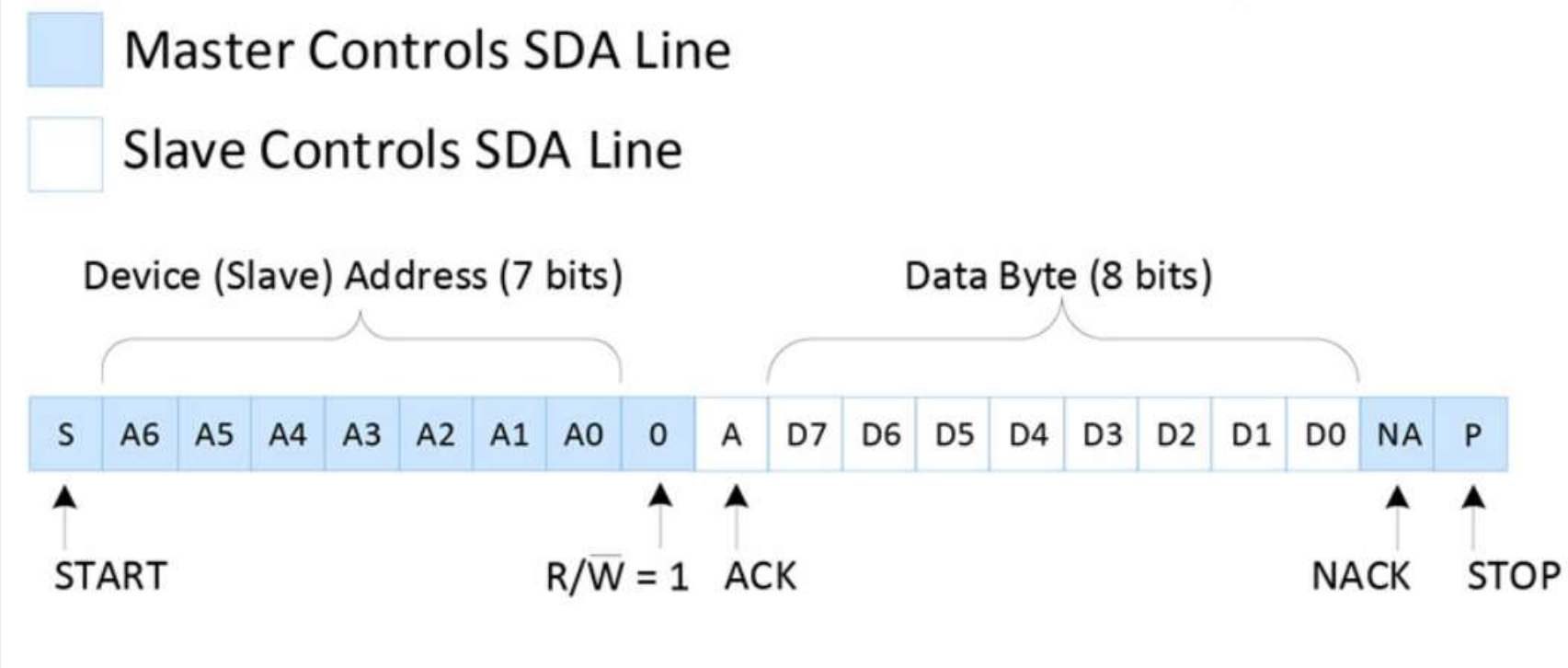

Circuit Diagram

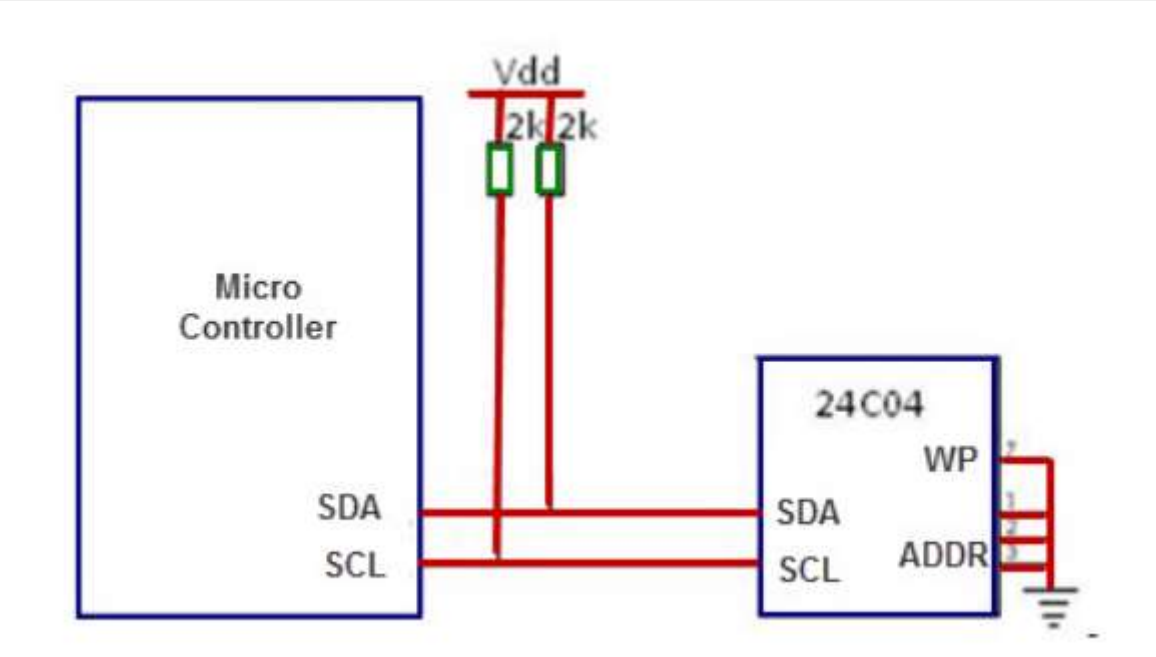

Q & A

Thank You