HE Series Selectable Candela Evacuation Signals

HEC/HES/HEH

APPLICATIONS

The HE Series is a low profile strobe and horn/strobe combination that offers dependable audible and visual alarms and the lowest current available.

The HE Series 24VDC offers tamperproof field selectable candela options of 15, 30, 60, 75, and 110 candela.

The 12VDC models offers tamperproof field selectable candela options of 15, 30, 60, and 75 candela. The HE Series horn offers a continuous or synchable temporal three in 2400Hz and mechanical tone, a chime and whoop tone. All tones are easy for the professional to change in the field by using switches.

The HE Series has a minimal operation current and has a minimum flash rate of 1Hz regardless of input voltage.

The HE Series is shipped with the standard 4" metal mounting plate which incorporates the popular Slide feature that allows the installer to easily test for supervision. The product also features a locking mechanism which secures the product to the bracket without any screws showing.

The HE Series appliances are UL 464 and UL 1971 listed for use with fire protective systems and are warranted for three years from date of purchase.

PRODUCT LISTINGS

SIGNALING UL LISTED

California State Fire Marshal
- 7135-0410:0187
- 7135-0410:0188
- 7125-0410:0192
- 7135-0410:0193

STANDARD FEATURES

- Nominal voltage 12VDC and 24VDC
- 24VDC units have field selectable candela options of 15, 30, 60, 75, and 110 candela
- 12VDC units have field selectable candela options of 15, 30, 60, and 75 candela
- Unit Dimensions: 5" high x 4.5" wide x 2.5" deep
- Synchronize strobe and/or horn with Hochiki Series Control Module (12VDC product must use the HAVSM Module)
- Prewire entire system, then install signals
- Lower installation and operating costs
- Input terminals supports 12 to 18 gauge wire
- Switch selection for high or low dBA
- Switch for chime, whoop, mechanical and 2400Hz tone
- Switch for continuous or temporal 3 (not available on whoop tone)
- Surface mount with the HSB (Hochiki surface mount box)
- Silence horn while strobes remain flashing
- Wide voltage range 8-17.5VDC (12VDC units) 16-33VDC or FWR (24VDC units)
- Faceplate available in red or off-white

Product Compliance

- NFPA 72
- Americans with Disabilities Act (ADA)

UL Listed

- HEC = UL# S1529
- UL# S8369
- HES = UL# S8369
- HEH = UL# S1529

Specifications subject to change without notice.

Continued on back.

Hochiki America Corporation
7051 Village Drive, Suite 100, Buena Park, CA 90621-2268
Phone: 714-522-2246 Fax: 714-522-2268
Technical Support: 800-845-6692 or technicalsupport@hochiki.com

ISO 9001:2015 CERTIFIED

Assembled in the USA

HE Series Selectable Candela Evacuation Signals

HEH 12VDC or 24VDC Low Profile Evacuation Horn

Model Number	Part Number	Nominal Voltage	Reverberant dBA @ 10ft., per UL 464	In Anechoic Room dBA @ 10ft.
HEH24-WR	0500-05880	24VDC	62-82	100
HEH24-WW	0500-05890	24VDC	62-82	100

HES3 12VDC or 24VDC Selectable Candela Low Profile Evacuation Strobe

Model Number	Part Number	Nominal Voltage	Candela (UL 1971)
HES3-12WR	0500-05900	12 VDC	15, 30, 60, 75
HES3-12WW	0500-05910	12 VDC	15, 30, 60, 75
HES3-12PWR	0500-05920	12 VDC	15, 30, 60, 75
HES3-12PWW	0500-05930	12 VDC	15, 30, 60, 75
HES3-24WR	0500-05940	24VDC	15, 30, 60, 75, 110
HES3-24WW	0500-05950	24VDC	15, 30, 60, 75, 110
HES3-24PWR	0500-05960	24VDC	15, 30, 60, 75, 110
HES3-PWW	0500-05970	24VDC	15, 30, 60, 75, 110
HES24-1575WR	0500-05740	24VDC	15, 75
HES24-1575WW	0500-05750	24VDC	15, 75
HES24-177WR	0500-05760	24VDC	177
HES24-177WW	0500-05770	24VDC	177

Model Designations:

W = Wall mount R = Red faceplate
W = Off-White faceplate P= Plain (no lettering)

ALERT - bezel available

AGENT - bezel available

HEC3 12VDC or 24VDC Selectable Candela Low Profile Evacuation Horn/Strobe

Model Number	Part Number	Nominal Voltage	Candela (UL 1971)	Reverberant dba @ 10ft., per UL 464	In Anechoic Room dBA @ 10ft.
HEC3-12WR	0500-05980	12 VDC	15, 30, 60, 75	62-82	100
HEC3-12WW	0500-05990	12 VDC	15, 30, 60, 75	62-82	100
HEC3-12PWR	0500-06000	12 VDC	15, 30, 60, 75	62-82	100
HEC3-12PWW	0500-06010	12 VDC	15, 30, 60, 75	62-82	100
HEC3-24WR	0500-06020	24 VDC	15, 30, 60, 75, 110	62-82	100
HEC3-24WW	0500-06030	24 VDC	15, 30, 60, 75, 110	62-82	100
HEC3-24PWR	0500-06040	24 VDC	15, 30, 60, 75, 110	62-82	100
HEC3-24PWW	0500-06050	24 VDC	15, 30, 60, 75, 110	62-82	100

HE3-12 Product Strobe Current Ratings

Candela	15cd	30cd	60cd	75cd
12VDC	106mA	131mA	186mA	237mA
UL Max	92mA	141mA	260mA	312mA

HE3-24 Product Strobe Current Ratings

Candela	15cd	30cd	60cd	75cd	110cd	15/75cd	177cd
24VDC	30mA	35mA	66mA	80mA	103mA	- -	- -
UL Max	42mA	58mA	97mA	116mA	161mA	67mA	213mA

HE3-12 Product Horn Current Ratings

Horn Mode	Minimum dBA @ 10ft., per UL 464 (HIGH)	Minimum dBA @ 10ft., per UL 464 (LOW)	Regulated 12VDC Max. Operating @ High Setting (mA)
Temp 3 2400Hz	76	69*	29
Temp 3 Mechanical	75	68*	26
Temp 3 Chime	62*	60*	13
Continuous 2400Hz	79	74*	29
Continuous Mechanical	78	72*	26
Continuous Chime	63*	61*	13
Whoop	78	71*	55

HE3-24 Product Horn Current Rating

Horn Mode	Minimum dBA @ 10ft., per UL 464 (HIGH)	Minimum dBA @ 10ft., per UL 464 (LOW)	Regulated 24VDC Max. Operating @ High Setting (mA)
Temp 3 2400Hz	78	71*	28
Temp 3 Mechanical	76	70*	25
Temp 3 Chime	70*	66*	15
Continuous 2400Hz	81	74*	28
Continuous Mechanical	80	72*	25
Continuous Chime	70*	66*	15
Whoop	82	69*	56

NOTES:

- Operating temperature: 32°F to 120°F (0°C to 49° C). The HE Series is not listed for outdoor use.
- The sound output for the temporal 3 tone is rated lower since the time the horn is off is averaged into the sound output rating. While the horn is producing a tone in the temporal 3 mode its sound pressure as the same as the continuous mode.
- For nominal and peak current across UL regulated voltaje range for filtered DC power and unfiltered (FWR [Full Wave Rectified]) power, see installation manual. 12VDC models are DC only.
- Hochiki does not recommend using a coded or pulsing signaling circuit with any of our strobe products (see Technical Bulletin 014).

* Operating the horn in this mode at this voltage will result in not meeting the minimum UL reverberant sound level required for public mode fire protection service. These settings are acceptable only for private mode fire alarm use. Use the high dBA setting for public mode application (not applicable when using the chime tone. The chime tone is always private mode).

[1] RMS current ratings are per UL average RMS method. UL max current rating is the maximum RMS current within the listed voltage range (16-33VDC for 24VDC units) (8-17VDC for 12 VDC units). For strobes the UL max current is usually at the minimum listed voltage (16VDC for 24VDC units) (8VDC for 12VDC units). For audible the max current is usually at the maximum listed voltage. For Unfiltered FWR ratings, see installation manual.

HE Series Selectable Candela Evacuation Signals

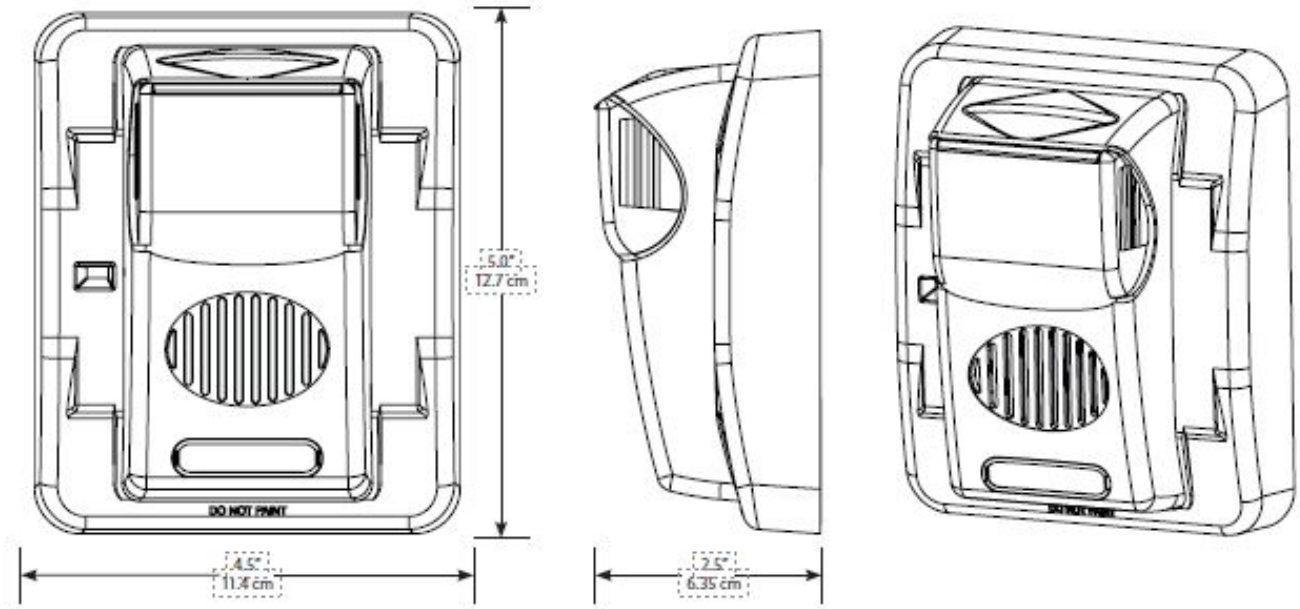

Specifications subject to change without notice.

Continued on back.

Hochiki America Corporation
7051 Village Drive, Suite 100, Buena Park, CA 90621-2268
Phone: 714-522-2246 Fax: 714-522-2268
Technical Support: 800-845-6692 or technicalsupport@hochiki.com

Find latest revision at **www.hochiki.com**

F0016 02/2018