Calculation Methodology

Top Previous Next

Lifting line procedures offer a well-known solution for the preliminary wake-adapted design (and analysis) of marine propellers. This chapter will describe the practical application of lifting line codes, prediction of propeller foil lift and drag characteristics, as well as discuss the corrections necessary for accurate determination of pitch angle.

Geometry and Flow Coordinate System

Top Previous Next

The coordinate system and notation of velocity vector directions are described in this section. An overview is shown in the graphic below of a right-hand propeller (rotating clockwise when viewed from behind).

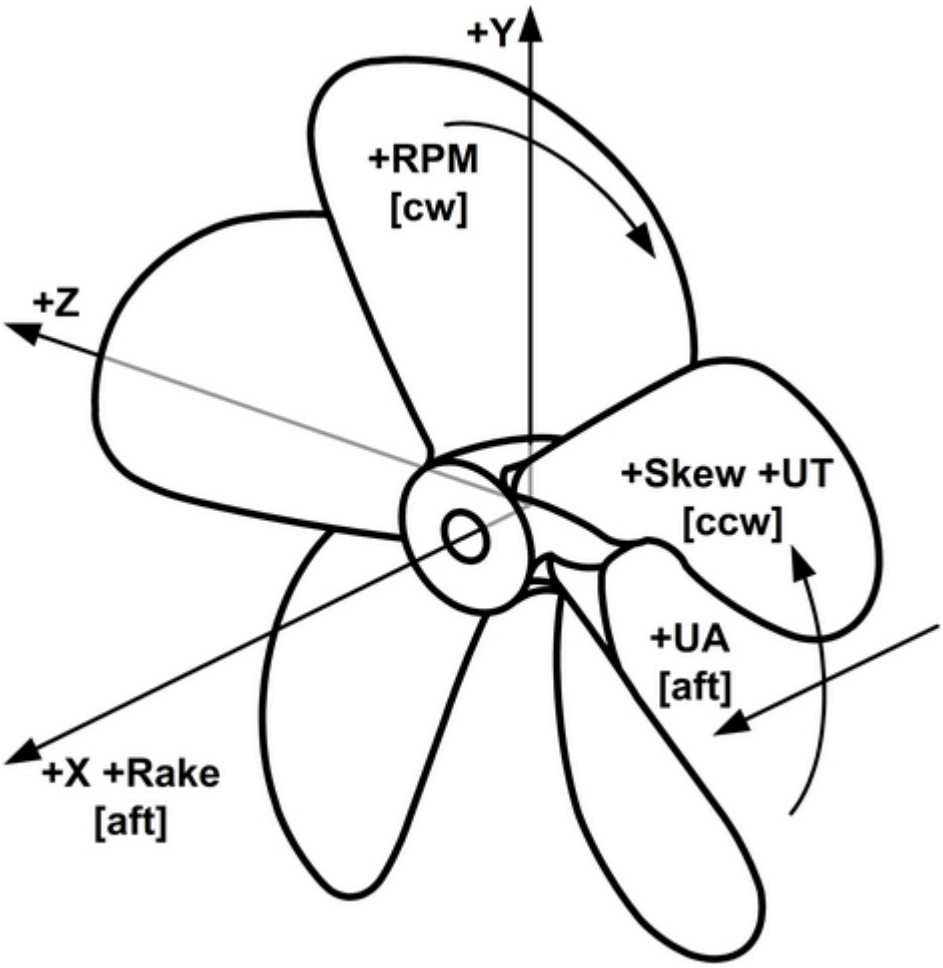

Generating line, reference line, and rake

For the purposes of marine propeller design, propeller blades are represented by a collection of foils (commonly known as "sections"), each positioned on its own helix. The helix is defined by a radius and a nose-tail pitch angle. It is also defined by an axial position, commonly known as "rake", and each section can have its own rake.

It is important to understand that a rake value at a particular radius refers to the position of the section's helix. It is the intersection of each helix in the X-Y plane (as described in the graphic above). These intersections connect to make the "generating line" (GL). In other words, this is the line from which each helix is generated. The helix generating line does not need to be vertical or even a straight line. (They often are, but it is not a requirement.) A vertical "reference line" (RL) in the same plane is the ordinate for the axial rake values. In the system described above, the reference line is the Y axis.

It is important to distinguish between the dimensional rake position of the helix (at each radius on the GL) to that of the axial distance of the blade from the Y-Z plane. If the propeller has skew, the relocation of the blade section along the helix will introduce what is referred to as "skew induced rake". You will find that throughout propeller design, any design figure for rake will refer to the position of the helix on the GL.

(However, you may find a different reference in other settings. For example, some thickness rules from classification societies use a "tip rake" that is defined by the axial tip position from the Y-Z plane that includes the effects of skew.)

Linear and axial coordinates

The principal linear coordinate is the X-direction, which will be positive aft. Linear dimensions (e.g., rake) and axial velocities (e.g., U_A) are positive in the typical direction of flow from ahead to astern, which is also aft.

Angular and rotational coordinates

The rotation of the propeller (RPM) is positive in the normal rotation for ahead performance (e.g., clockwise [CW] for a right-hand propeller). Angular dimensions (e.g., skew) and velocities (e.g., U_T) are positive in the typical direction of flow from leading edge to trailing edge (e.g., counter-clockwise [CCW] for a right-handed propeller).

Left-hand propellers

The angular and rotational components (e.g., skew, U_T, RPM) will be opposite direction for a left-hand propeller. All other components are the same.

Velocities and Angles

Top Previous Next

Propeller performance in wake-adapted propeller design relies on the cumulative calculation of a section's helical "flight path" and the foil's lift and drag. This chapter describes the performance relationships between various blade section angles, velocities, camber, lift, and drag (as illustrated in the following graphics).

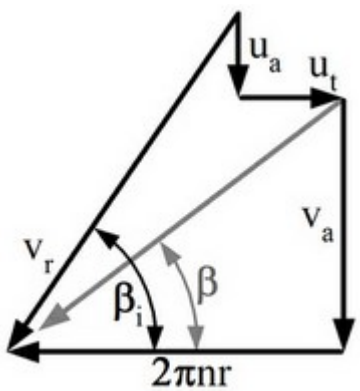

Velocities and angles

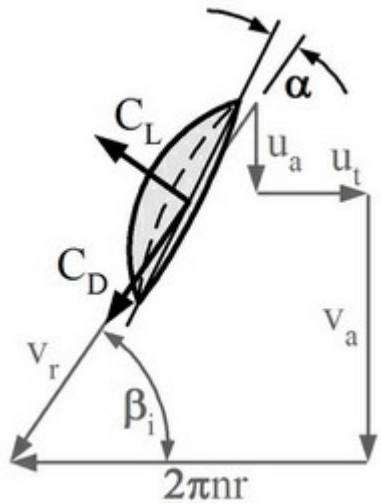

Angle-of-attack, camber, lift, and drag

Section advance angle, β

Each blade section is referenced against its own "advance angle", β. This angle is found from the advance of the water into the propeller (Va) plus rotational velocity (2πnr) at the section's radius (r). This angle is sometimes described as the "geometric pitch of advance".

Induced velocities and hydrodynamic pitch angle, βi

The existence of the propeller's pressure field (corresponding to the propeller thrust) will "induce" supplemental velocities. These are principally axial, but also tangential and (to a lesser extent) radial. Prediction of the principal induced velocities (Ua, Ut) is by the method attributed to Wrench [Wrench 1957] [Morgan 1965] resulting in a "hydrodynamic pitch angle", βi. (No consideration is given to the radial induced velocities. See the topic below on radial Inflow and slipstream contraction for additional details.) A plot of the important velocity vectors and angles considering the axial and tangential components are shown in the first graphic above.

Radial inflow and slipstream contraction

Radial inflow (i.e., in the direction from tip to root) is typically caused by the contraction of the slipstream and is generally ignored for codes that are limited to low or moderately loaded propellers. PropElements employs a novel blade loading flow curvature correction to account for conditions of significant slipstream contraction.

Note: The omission of radial contraction as a consideration in the flow geometry is perhaps the most significant reason why simpler lifting-line methodologies are not recommended for highly loaded propellers. The extent to which this omission actually compromises a result varies considerably. HydroComp has conducted validation studies, and for this version of PropElements, it is recommended that **propeller thrust loading coefficient CT be limited to 200 or below**. This should still allow for calculations at very low J coefficient (i.e., 0.05 or below). For ducted propellers, PropElements shows the total "unit" CT of propeller plus duct but the CT for the propeller alone is used for the data check. It should also be pointed out that there is evidence based on comparison to model tests that the propeller CT can be much higher than 200 when calculated in a nozzle.

Determination of the section pitch by the angle-of-attack, α

Many lifting line codes are used for initial pre-processing for more advanced flow codes, and it is not uncommon that they will stop with the calculation of βi. It is our intent to provide a more comprehensive calculation, so the prediction of angle-of-attack, α, is necessary to determine the "pitch angle", φ. (It is important to clarify what is meant by pitch angle, φ. For our purposes, it is the geometric nose-tail angle that would be used for manufacturing.)

So, the angular relationship to determine pitch angle is:

$$\varphi = \beta_i + \alpha$$

[nomenclature]

Corrections to determine the equivalent 2D angle-of-attack

As is described in Foil Lift and Drag, the performance characteristics of the blade foil elements are based on 2D foils. A variety of corrections are applied to relate the section's 3D angle-of-attack, α, to an equivalent 2D angle-of-attack, α2D.

Lifting surface corrections for angle-of-attack

The velocity and angle relationships noted above are based on foil performance using theoretical lifting lines that are grounded in two assumptions - they have no thickness and have a constant chordwise loading distribution. Of course, real blade foil shapes do have thickness, and they have a nose-to-tail loading distribution that is not constant (i.e., often more loaded toward the leading edge), both of which alter the real functional angle-of-attack. Two corrections are applied:

$$\alpha_{LOAD} = K_A \, \alpha_{2D}$$

$$\delta\alpha_{THICK} = K_T \frac{t}{D}$$

[nomenclature]

Note: The lifting surface corrections employed in PropElements were developed by study of other lifting surface correction methods [Morgan 1968] [van Oossannen 1975] [Walderhaug 1972]. One oft-quoted shortcoming of some of the lifting surface corrections was that they were limited to propellers in the design condition (i.e., at ideal angles-of-attack and at near optimum loading). The HydroComp implementation of lifting surface corrections uses both an angle multiplier, as illustrated above, plus an additional undocumented angle shift - resulting in better behavior stability and broader scope across a range of off-design conditions.

Correction for viscous effects in circular sections

An additional correction angle, δα-visc, can be applied for scale and viscosity [Mishkevich 1994]. This angle is a function of foil lift and Reynolds number.

Summary angle equation

The overall relations between the section's 3D angle-of-attack and the equivalent 2D angle (for performance parameters) is:

$$\alpha = K_A \, \alpha_{2D} + \delta\alpha_{THICK} + \delta\alpha_{VISC}$$

$$\alpha_{2D} = \frac{\alpha - \delta\alpha_{THICK} - \delta\alpha_{VISC}}{K_A}$$

[nomenclature]

NOMENCLATURE

c = constant
Ka = loading lifting surface correction factor
Kt = thickness lifting surface correction factor
t/D = foil thickness-to-diameter ratio

α = angle-of-attack of the blade section along the helix
α2D = equivalent 2D angle-of-attack
αi = ideal angle-of-attack for design
αload = angle corrected for loading
δαthick = angle supplement for thickness
δαvisc = angle supplement for viscosity effects
β = advance angle
βi = hydrodynamic pitch angle
ηi = ideal efficiency for a given thrust loading
φ = geometric pitch angle

Induced Volumetric Flow Rate

Top Previous Next

The supplemental velocities that are induced by the propeller's pressure field are described in the Velocities and Angles page. The axial induced velocities also reflect the amount of water that the propeller moves through the propeller disk.

Calculation of flow rate

In addition to its traditional naval architectural role in the design or analysis of a propeller to match a particular thrust requirement (as determined by a ship's resistance and thrust deduction, for example), PropElements is also commercially used to predict the volumetric flow rate at static conditions (such as for industrial mixers). Since the propeller is stationary, all throughput will be from the induced velocities.

A calculation of total induced volumetric flow rate from the radially-dependent induced velocities (*UiAxial*, with the addition of *UnAxial* for ducted propellers) is shown in the *Performance* page *Summary* table in the *IVFR* field. This field uses the *Flow rate* units (typically in m3/s or ft3/s, for example).

Foil Lift and Drag

Top Previous Next

A lifting line is a rudimentary performance model of a section's foil. The objective purpose of the foil, of course, is to provide lift - yet it also has drag. Therefore, the simple lifting line model needs to be altered so that it considers thickness, camber, viscosity (i.e., friction), and scale.

Theoretical 2D foil lift

A foil principally generates lift from its angle-of-attack plus a contribution due to camber. (Thickness also plays a small part, as is described later.) The lift of a theoretical 2D foil from these two parts can be represented by:

$$C_{L\alpha} = 2\,\pi\,\alpha_{2D}$$

$$C_{Lf} = 4\,\pi\,\frac{f_{2D}}{c}$$

$$C_L = C_{L\alpha} + C_{Lf} = 2\,\pi \left(\alpha_{2D} + 2\,\frac{f_{2D}}{c} \right)$$

[nomenclature]

Real 2D foil lift

The basic foil angle-of-attack relationships noted above were for theoretical 2D foils with no consideration of thickness, friction, or scale. The use of two scaling variables, μ and κ, provide correlation to real foil geometries:

$$C_{L\alpha} = 2\,\pi\,\mu\,\alpha_{2D}$$

$$C_{Lf} = 4\,\pi\,\kappa\,\frac{f_{2D}}{c}$$

$$C_L = C_{L\alpha} + C_{Lf} = 2\,\pi\,\mu \left(\alpha_{2D} + 2\,\kappa\,\frac{f_{2D}}{c} \right)$$

$$\alpha_{2D} = \frac{C_L}{2\,\pi\,\mu} - 2\,\kappa\,\frac{f_{2D}}{c}$$

[nomenclature]

Three-dimensional effects and Lifting Surface Corrections

Additional corrections are needed to be able to use the 2D foil properties (above) in the 3D environment of a propeller. For example, the induced velocities are not constant over the chord-wise span of the blade. Rather they steadily increase from leading edge to trailing edge, which imparts a curvature to the flow. This can be treated as a correction to the foil camber. Further, there are also influences from blade thickness, radial loading, and viscosity that will affect the angle-of-attack.

Therefore, the camber and angle-of attack for a lifting line must be corrected to account for these effects using "Lifting Surface Corrections" (LSC). The LSC corrections will modify camber (K_C), as well as the angle-of-attack due to loading (K_A), thickness (K_T, which is used to calculate $\delta\alpha_{THICK}$), and viscosity ($\delta\alpha_{TVISC}$). The camber correction is of the form:

$$f = K_C\,f_{2D}$$

$$f_{2D} = \frac{f}{K_C}$$

[nomenclature]

The LSC correction model can be selected from the available options in the settings: **Conventional** [Oossanen 1975, from Morgan 1968], **Very low EAR** [Minsaas 2008]. The *Very low EAR* option is recommended for EAR values below 0.30, specifically with 2- and 3-bladed propellers. Otherwise, always choose the *Conventional* option.

Lift versus 3D foil camber and angle-of-attack

Applying all of the various real foil, lifting surface, and viscous corrections, the lift, camber and angle-of-attack relationship comes to:

$$C_L = 2\,\pi\,\mu \left(\frac{\alpha - \delta\alpha_{THICK} - \delta\alpha_{VISC}}{K_A} + 2\,\frac{\kappa}{K_C}\,\frac{f}{c} \right)$$

$$\alpha = K_A \left(\frac{C_L}{2\,\pi\,\mu} - 2\,\frac{\kappa}{K_C}\,\frac{f}{c} \right) + \delta\alpha_{THICK} + \delta\alpha_{VISC}$$

[nomenclature]

Drag coefficient

While lift and angle-of-attack (CL and α) are the critical drivers for the design solution of pitch and camber, the section's drag coefficient (CD) also must be considered in the internal calculations. A section's drag coefficient is principally a function of thickness-chord ratio and section Reynolds number. It is also highly influenced by angle-of-attack (particularly for off-design analysis).

Drag is at a minimum at one particular angle-of-attack (typically no more than a few degrees from zero). As angle-of-attack increases or decreases (to a negative attack), then drag coefficient will go up. The location of the "trough" of the CD curve is an "optimum" design condition, and the CL at this point is typically identified as "CLopt".

Drag coefficient can then be predicted from two component parts – the minimum CD (i.e., the profile drag) plus the effect of angle-of-attack:

$$C_D = C_{D_{MIN}} + \delta C_D$$

[nomenclature]

Foil prediction methods

The user can select from different foil prediction methods for CL and CD. It is important to understand that these predictions are based on the principal foil characteristics only – t/c, f/c, α, and Rn. They do not use thickness or camber distribution shapes as part of the prediction. However, some of the methods are based on a specific thickness and camber distribution (e.g., NACA66mod thickness with a=0.8 camber). Others are more generic or quite simple.

The available foil prediction methods are:

- **Universal.** This is the most broadly applicable foil prediction method. It is based on a Prandtl-Schlicting friction line and foil thickness correction. It does not include use of the CL scaling variables, μ and κ.
- **NACA 66 mod.** This is specific to the NACA 66 (mod) thickness with a=0.8 camber, and includes the CL scaling variables, μ and κ.
- **Bi-Circular.** This is specific to a fully symmetric section (i.e., no camber) with a thickness distribution of a circular arc. The method includes the CL scaling variables, μ and κ.
- **Segmental.** This offers a refined prediction for segmental blade shapes. (Segmental sections are typically flat-faced with a back of a circular arc, popularly known as Gawn-Burrill sections.) The resulting performance is similar to that when using a Universal foil method, but typically exhibits a bit higher torque prediction at low J (which is characteristic of the shape). The method includes the CL scaling variables, μ and κ.
- **Custom.** This is for those users wishing to follow a legacy lifting-line approach, whereby CDmin is user-defined (and common for all sections) and CL does not include any scaling corrections. This option is not scalable with Rn. This is an obsolete prediction method and should not be used unless there is a particular technical reason to do so.

Note: Both components of CD (CDmin, dCD) are been included as part of the foil prediction methods. CDmin is typically a function of thickness-chord ratio and section Reynolds number. The angle-of-attack contributor (dCD) is predicted as a function of thickness-chord ratio and the lift differential from CLopt.

Post-stall lift and drag

It is important to keep in mind that the lift and drag discussed here are for the typical "pre-stall" condition. PropElements uses a simplified "post-stall" formulation for highly "off-design" angles-of-attack [Shen 1997] [Drela 1999]. Predictions for the point of stall have been prepared for each of the available foil types.

A simple stall model is also included for high negative angles-of-attack. This would be applied when the propeller is in "second quadrant" operation (i.e., "turbine" mode).

Blockage ratio and cascade effects

When foils are in close proximity to each other, they are subject to interference effects that are caused by flow "blockage". (These are also called "cascade" effects, where a trailing foil in a cascade can be influenced by another upstream foil.) These effects are often considered to be negligible and typically

ignored, but they can be significant for root sections of propellers that are thick and have high blade area. PropElements applies a correction to the drag coefficient inspired by a method developed for NACA 65 sections [Hadler 1982].

Note: Further research referencing test measurements for the DTRC 4119 propeller indicates that the Hadler correction greatly overpredicts the added CD correction, so a fractional multiplier of the published correction is used in PropElements.

A "Blockage" ratio (Tc/S) is shown on the Geometry page, where 0 is no blockage and 1 is full blockage. Blockage ratios less than 0.1 causes little or no correction. Blockage ratio can also be a design metric. Ratios greater than 0.5 should be avoided. Reducing blade thickness is the typical way to improve blockage ratio, which would require an increase in chord length to maintain strength.

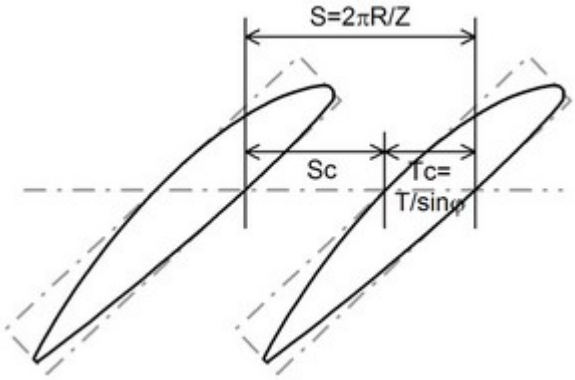

NOMENCLATURE

CD = drag coefficient
CDmin = minimum (profile) drag coefficient
dCD = additional CD due to angle-of-attack
CL = lift coefficient
c/D = section chord-diameter ratio
f = max section camber in 2D
f ' = corrected section max camber (i.e., the real section camber)
f/c = section camber-chord ratio

Ka = loading lifting surface correction factor
Kc = camber lifting surface correction factor
Kt = thickness lifting surface correction factor
Rn = foil Reynolds number
t/c = section thickness-chord ratio

α = angle-of-attack (i.e., the real section angle-of-attack)
α0 = zero-lift angle-of-attack (typically negative)
αi = ideal angle-of-attack
κ = camber scaling multiplier
μ = lift scaling multiplier

Radial Circulation Distribution

Top Previous Next

Fluid "circulation" is often a difficult concept to correlate with an observed physical property. For the purposes of propeller and foil analysis, it can be treated as a mathematical system that uses a vortex as a simple numerical model for the foil to properly resolve the forces and velocities that are at work. A fluid vortex is a rotating local (tangential) velocity, and its "vorticity" or "vortex strength" (Γ) is that velocity times the circumference of the vortex:

$$\Gamma = U_T \, 2 \, \pi \, r_T$$

[nomenclature]

In particular, we are concerned with the lift of our vortex (foil). Vorticity and circulation can be thought of as a way to measure the vortex strength – which in turn relates to the amount of lift generated by the vortex (foil). The *Kutta-Jukowski theorem* states that lift is directly related to circulation (vortex strength) and the velocity of the vortex itself, represented here in dimensional form:

$$L = \rho\, U\, \Gamma$$

[nomenclature]

The circulation (G, often called "circulation strength") relates vortex strength to the velocity of the moving vortex:

$$G = \frac{\Gamma}{\pi D V}$$

[nomenclature]

So that, in non-dimensional coefficient form, the lift coefficient becomes:

$$C_L = \frac{2\,\pi\, G\, V_S\, D}{V_R\, c}$$

[nomenclature]

Optimum radial distribution of circulation

The solution for the optimum radial distribution of circulation (and subsequently the distribution of lift) is central to the "optimized" design of the propeller, and each section's particular pitch and/or camber. A summary of the problem might be: *What particular circulation distribution results in the least torque for the required thrust?* One solution to this problem that is employed in the current version of PropElements is known as "Lerbs optimum" [Lerbs 1952]. This method identifies an optimized radial distribution of circulation for a wake-adapted propeller using the ratio of the tangents of βi and β, as well as the "ideal efficiency" of the propeller:

$$\tan(\beta_i) = \frac{\tan(\beta)}{\eta_i} \sqrt{\frac{V_S}{V_R}}$$

$$\eta_i = \frac{2}{1 + \sqrt{1 + C_T}}$$

[nomenclature]

Ideal efficiency, ηi, is an abstract "maximum possible" efficiency of the propeller as described by an "actuator disk". An actuator disk is a circular disk area equal to the propeller's that has an infinite number of blades (of zero chord length) and infinite rotational speed. It has no axial depth or tangential "swirl" (due to viscous properties of a real foil), and its performance (thrust and efficiency) is described in whole by the conservation of fluid momentum. The resulting ideal efficiency is thus a function of the thrust loading (as described by the coefficient, CT).

Note: This equation above was originally proposed with a thrust deduction component. This has generally been considered as being inconsequential to the solution (with a few notable exceptions [van Manen 1955]), so the thrust deduction term is not used in PropElements.

Future researchers have modified Lerb's original formulation to allow for closer prediction to deliverable performance, and to consider somewhat different loading distributions. So, the contemporary general-case version of the relationship can be written as:

$$\tan(\beta_i) = \frac{\tan(\beta)}{k\,\eta_i} \left(\frac{V_S}{V_R} \right)^n$$

[nomenclature]

The constant (k, often recommended as 0.90) is added to reduce the theoretical "ideal efficiency" to a more practical "state-of-the-art efficiency" for real propellers. The square root exponent of 0.5 that was originally proposed by Lerbs is still the typical value used in most calculations, and is the value used in PropElements for open propellers. The optimum circulation loading distribution as proposed above is valid only for open

propellers. (Different distributions would be used for ducted or tip-fin propellers.) For ducted propellers, studies by HydroComp have found that an exponent value of 0.25 provides a successful distribution, and this is used in PropElements.

Note: Other values for the exponent term have been quoted that push the loading more to the tip (e.g., 0.75 [van Manen 1955], 0.85 [Loukakis 1981]), but there is significant dispute regarding the real performance benefits of additional tip loading.

Effect of a hub or rim on circulation distribution

The existence of a hub (or any boundary) changes the nature of the blade loading (i.e., circulation distribution). A technique known as an "image" is employed to provide for the real loaded circulation at the hub. A similar "image" is also employed for a "rim" when a duct or tunnel wall is present (including an option for the relief of loading with a typical tip-to-wall gap spacing).

Defined unloading at the rim or hub

Unloading of the blade at the tip or root is achieved by reducing the difference between βi and β. This also results in a reduction of the circulation distribution.

NOMENCLATURE

c = foil chord length
CL = lift coefficient
CT = thrust loading coefficient
G = non-dimensional circulation strength
k = ideal efficiency reduction constant
L = foil lift
n = velocity ratio exponent
r_T = virtual radius of the vortex tangential velocity
U = velocity of the vortex through the fluid
U_T = virtual vortex tangential velocity
Vr = velocity of the foil along its βi helical path
Vs = volumetric mean axial velocity (nominally ship speed less wake fraction)
β = advance angle
βi = hydrodynamic pitch angle
Γ = local vorticity
ηi = ideal efficiency for a given thrust loading
ρ = fluid density

Nozzle Contribution

Top Previous Next

When a ducted propeller is selected (Ducted FPP), PropElements determines the contribution of the nozzle (also called a duct or shroud) to the performance of the propeller and the overall "unit". A nozzle affects the calculations in a number of ways - thrust contributions, changes to velocity inflow, and differences in radial loading (i.e., circulation).

The prediction of nozzle contribution in PropElements is not from a direct analytical computation for the nozzle's shape. It is based on a dimensional analysis of model test data for the type of nozzle selected. Nozzles can include thrust-making accelerating styles (that might be seen on tugboats or UV thruster units for example), including the NSMB nozzles **19A**, **37**, or "**high efficiency**" (also called "low drag") nozzles. Decelerating nozzles, such as NSMB **33** and **34**, are typically used for noise mitigation. Minimally contributing nozzles, such as NSMB **30** and **38** are used where least-drag shroud protection is needed. Integrated **circular tunnels** (like a tunnel thruster) can also be evaluated.

Thrust contributions

The total KT of the propeller+nozzle "propulsor unit" is determined from the thrust contributions of the propeller (KTP) and nozzle (KTN). The fundamental performance of the propeller component follows the same procedures as for open propeller. The prediction of nozzle contribution is based on the model testing for nozzles (described above).

Velocity inflow

A nozzle changes the inflow velocity magnitude and distribution into its propeller. This induced nozzle velocity is caused by the shape of the nozzle and the low pressure field from the propeller. Published

studies were consulted to developed prediction algorithms for the magnitude and radial distribution of this induced nozzle velocity. Predicted values for the nozzle's velocity contribution are shown in the *UnAxial* column (in the INFLOW VELOCITIES group).

Radial loading

The physical constraint of the nozzle at the tip of the propeller changes how blade loading is relieved at the tip. For example, if the tip gap were zero, the shape of the circulation distribution would typically be its maximum at the tip. (This is often called a "mirror" or "image" effect, and is enabled by a "Full image" selection.) However, the existence of a tip gap relieves the loading somewhat. A prediction of the nozzle "Tip gap image" effect on circulation was developed based on review of published model testing and computational analysis of blade loading as a function of tip gap.

Note: The nozzle influence algorithms assume a wide-tip blade section.

Circular tunnel

Duct-like effects can also be modeled for cylindrical tunnel thrusters. A study similar to those for conventional nozzles described above was conducted by HydroComp for circular (cylindrical) tunnels. These have been employed for system analysis in HydroComp NavCad, and specifically for component propeller design in PropElements.

Effectiveness

There are circumstances whereby the nozzle is not able to fully develop its expected contribution of thrust (KTN). A few examples of this include:

- use of a headbox to attach the nozzle to the hull or integration of the upper arc of the nozzle into the hull (where the flow over the duct is no longer around its full circumference)
- use of flanking rudders ahead of the nozzle (that modify and restrict the necessary curvature of flow over the duct).

In these cases, you can "de-rate" the nozzle's contribution by defining a reduced Effectiveness (to some figure less than one). The hydrodynamic implications of reduced nozzle effectiveness are a reduction in its ability to accelerate water into the propeller, thereby causing the propeller thrust (KTP) and torque (KQ) to increase. It is often the case that there will be only a small change in the total thrust (as KTN and KTP change by similar magnitudes), but KQ will increase.

Nozzle length/diameter ratio

A nozzle length correction allows for consideration of the effect of longer or shorter axial length. Throughout the evolutionary development of popular nozzle styles, the "diameter" basis for determining a nozzle's length ratio is not consistent. Most of the early nozzles presented length data as compared to the propeller diameter. The popular "producible" 19A and 37 nozzles used the inner nozzle diameter as the basis. Given that the tip gap clearance was approximately 0.4% of diameter, there is no practical difference (less than 1%) between using propeller and inner nozzle diameter for the basis.

The decelerating 33 and 34 nozzles, however, used an effective "nozzle diameter" which was a computationally derived figure. Converted to the propeller diameter as the basis, the standard nozzle length is 0.657 times diameter.

The effect of nozzle length is considered as a change in the calculation of the nozzle thrust component (KTN) and its corresponding inflow velocities effects. The correction function has no effect on the thrust contribution at the standard length-diameter ratio, and zero nozzle contribution at zero length. Its data range is for nozzles from 60% to 200% of the standard nozzle length (although it is anchored so that nozzles smaller than 60% standard length should be acceptably modeled).

Inception of critical nozzle cavitation

At bollard, where the J coefficient approaches zero, approximately half of the total thrust is provided by the nozzle [Oosterveld 1970]. Evidence has shown that under certain conditions, the nozzle itself can undergo a breakdown in thrust. The cause of the thrust breakdown is attributed to separation of the flow on the inner nozzle surface that is triggered by tip vortex (gap leakage) cavitation. Studies of nozzle thrust breakdown provide a means to estimate the inception of breakdown and the risk of reduced bollard pull [Mertes 2008].

Tests show the potential for up to 20% total thrust loss (i.e., 40% breakdown in the nozzle thrust contribution).

The indicator for nozzle breakdown was developed by HydroComp based on this work (which was extended to include the effect of blade area ratio). The magnitude of nozzle breakdown is not predicted, but inception of breakdown is indicated when the tip speed cavitation number (*SigmaN*) is less than the inception cavitation number (*SigmaNi*).

Mean Force Distributions

Top Previous Next

The **Strength** page includes prediction of *Axial*, *Tangent*, and *Radial* force distributions. This information can be used to develop force load data for Finite Element Analysis (FEA) or other strength calculations, as well as for initial body forces for Computational Fluid Dynamic (CFD) analysis.

Developed forces

To determine the loadings on the blade, the blade is sliced into many thin sections, and each section's lift and drag are aligned to the proper axial thrust and tangential torque orientation (as is illustrated below). These are then integrated radially (from root to tip) to calculate the total thrust and torque for the propeller blade.

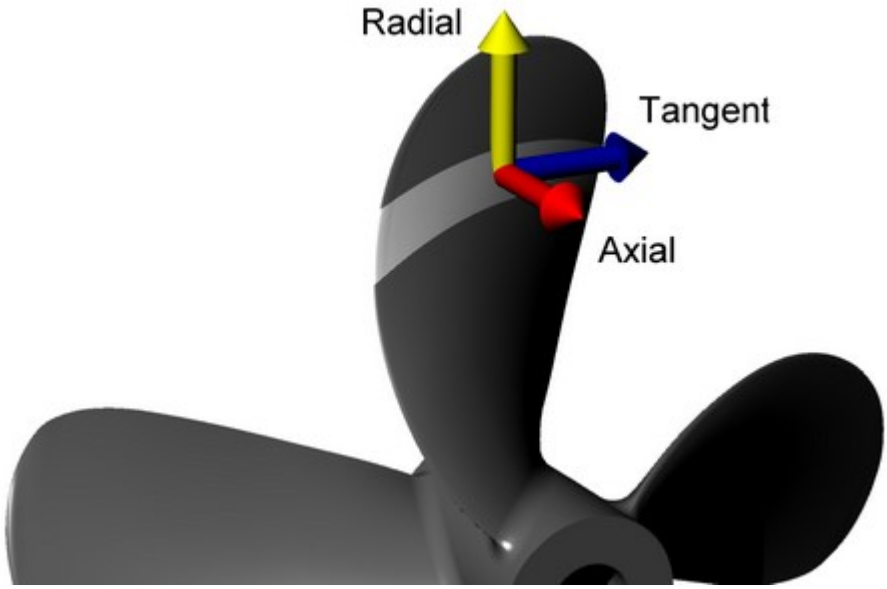

These values are a representation of the applied Axial, Tangent, and Radial forces at the entered section radial positions. Displayed as Force Distributions" (also known as "body forces"), these figures are the forces divided by the radial slice and chord length (as a Force-per-Length-per-Length, or pressure unit). Depending on the requirement, the Force Distributions can be further subdivided into chordwise pieces, as shown below.

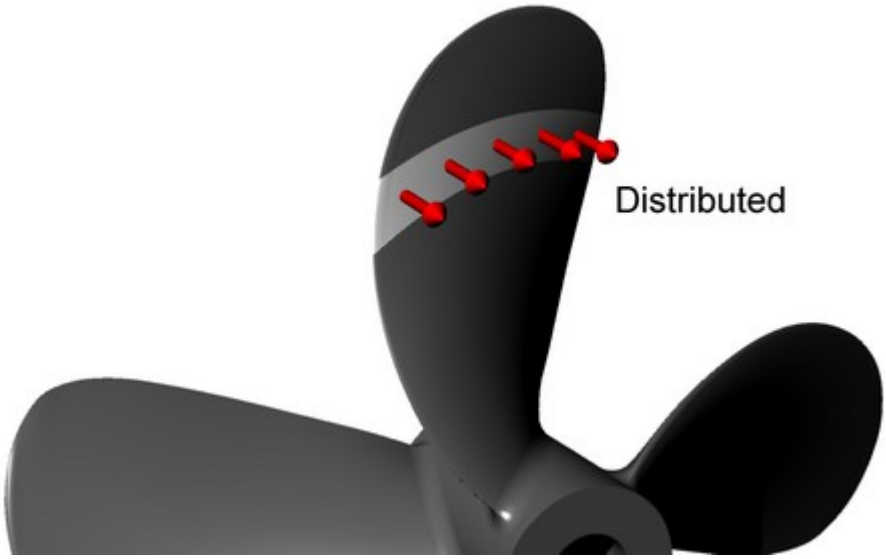

For FEA analysis, you would use all three sets of Force Distributions. For their use as initial body forces for CFD, omit the Radial force (as this is from the centrifugal tension of the material).

Chord-wise average

A uniform subdivision of force does not represent the true chord-wise distribution (as developed from the hydrodynamic pressure distribution). That being said, studies have shown that an averaged figure is still suitable for most FEA analysis.